TELEPHONE SUITS.

Circuit Court of the United States,

DISTRICT OF MASSACHUSETTS.

IN EQUITY.

BELL TELEPHONE COMPANY ET AL.

v.

PETER A. DOWD.

PART I.

PLEADINGS AND EVIDENCE.

CHAUNCEY SMITH, J. J. STORROW AND C. E. HUBBARD,
for Complainants.

CAUSTEN BROWNE, GEORGE GIFFORD AND WM. D. BALDWIN,
for Defendant.

BOSTON:
ALFRED MUDGE & SON, LAW PRINTERS, 34 SCHOOL STREET.
1880.

2776

Page

Complainants' Exhibit 12, Centennial Judges' Report on Gray's Electric Telephone and Multiple Telegraph 172
Complainants' Exhibit 13, Gray's Chicago Lecture 173

Deposition of Milo G. Kellogg: —

Direct Examination 178
Cross Examination 180

Deposition of Enos M. Barton: —

Direct Examination 181

Deposition of Anson Stager: —

Direct Examination 184
Cross Examination 186

Deposition of Edward S. Renwick: —

Direct Examination 190
Cross Examination 231
Direct Examination resumed 266
Cross Examination resumed 268

Deposition of William M. Goodridge (recalled) . —

Direct Examination 269
Cross Examination 276

Deposition of Elisha Gray (recalled): —

Direct Examination 279
Cross Examination 279

Deposition of Amos E. Dolbear: —

Direct Examination 286
Defendant's Exhibit, Dolbear Diagram of Sept. 20, 1876 288
Cross Examination 292
Dolbear's Letter to Bell, Feb. 16, 1877 297
Dolbear's Letter to Bell, May 6, 1877 298
Direct Examination resumed 308
Dolbear's Letter to G. G. Hubbard, Aug. 1, 1877 309
Hubbard's Letter to Dolbear, Aug. 5, 1877 310
Hubbard's Letter to Dolbear, Aug. 9, 1877 311
Dolbear's Letter to Hubbard, Aug. 10, 1877 312
Hubbard's Letter to Dolbear, Aug. 14, 1877 313
Defendant's Exhibit, Dolbear Agreement 314

Deposition of Frank L. Pope: —

Direct Examination 318
Cross Examination 340
Direct Examination resumed 373
Cross Examination resumed 379

EVIDENCE FOR COMPLAINANTS IN REPLY.

Page

Deposition of Charles R. Cross: —

Direct Examination 382
Cross Examination 408
Direct Examination resumed 424
Cross Examination resumed 427

Deposition of Gardiner G. Hubbard: —

Direct Examination 429

Deposition of Alexander Graham Bell: —

Direct Examination 440
Drawing of Two-Tone Transmitter, made November, 1873 444
Drawings of Harmonic Receiver, November, 1873 445
Drawings of Multiple Telegraph Instruments with Induction Coils, December, 1873, January, 1874 449
Drawing of Magneto-Electric Transmitter without Battery, Summer of 1874 451
Drawing of Harp Arrangement, Summer of 1874 453
Bell's Letter to his Father, March 18, 1875 459
Bell's Letter to G. G. Hubbard, May 4, 1875 464
Bell's Letter to his Father, May 24, 1875 467
Bell's Letter to G. G. Hubbard, June 2, 1875 470
Bell's Letter to G. G. Hubbard, June 28, 1875 476
Bell's Letter to G. G. Hubbard, July 1, 1875 477
Bell's Letter to G. G. Hubbard, July 7, 1875 480
Bell's Letter to G. G. Hubbard, Aug. 14, 1875 482
Bell's Letter to G. G. Hubbard, Sept. 28, 1875 485
T. Sterry Hunt's Letter to Bell, June 25, 1876 495
Bell's Letter to W. H. Hubbard, July 2, 1876 497
Bell's Letter of Nov. 12, 1876 502
Cross Examination 509
Direct Examination resumed 532

Deposition of A. M. Bell: —

Direct Examination 534

Deposition of Thomas A. Watson: —

Direct Examination 536
Cross Examination 553
Direct Examination resumed 557

Deposition of William H. Hubbard: —

Direct Examination 557

Page

Deposition of J. B. Henck, Jr.:
Direct Examination 560

Deposition of Clarence J. Blake:—
Direct Examination 561

Deposition of Edward L. Wilson:—
Direct Examination 564
Cross Examination 568
Direct Examination resumed 570

Deposition of Emile Berliner:—
Direct Examination 570
Cross Examination 571
Direct Examination resumed 571

Deposition of J. Oscar Zeigler:—
Direct Examination 571
Cross Examination 573
Direct Examination resumed 573

Deposition of Georges D'Infreville:—
Direct Examination 574
Cross Examination 601
Direct Examination resumed 608

Deposition of Edward E. Quimby:—
Direct Examination 608
Cross Examination 621
Direct Examination resumed 626

Deposition of Henry B. Renwick:—
Direct Examination 628

EXHIBITS.

COMPLAINANTS' EXHIBITS, INTRODUCED ON THE FOLLOWING PAGES.

No. 1. Bell's Patent of March 7, 1876 17
No. 2. Bell's Patent of Jan. 30, 1877 17
No. 3. Bell's Assignment to G. G. Hubbard, trustee 17
No. 4. Hubbard's Assignment to Bell Telephone Co 17
No. 5. Hubbard's License to New England Telephone Co 17
No. 6. Phelps' Box Telephone 18
No. 7. Phelps' Duplex Telephone 18
No. 8. Phelps' Crown Telephone 18
No. 9. Bell's Paper before Academy of Arts and Sciences 137
No. 10. General Report of Centennial Judges on Electric Telephone, etc. 145
No. 11. Centennial Judges' Report on Bell's Exhibit 145

2779

		Page
No. 12.	Centennial Judges' Report on Gray's Exhibit	145
No. 13.	Report of Gray's Chicago Lecture	146
No. 14.	Dolbear's Application	294
No. 15.	Membrane Telephone, No. 2, Transmitter	382
No. 16.	Membrane Telephone, No. 2, Receiver	382
No. 17.	Baby Membrane Telephone, Transmitter	384
No. 18.	Baby Membrane Telephone, Receiver	384
No. 19.	Lover's Electric Telephone, Transmitter	385
No. 20.	Lover's Electric Telephone, Receiver	385
No. 21.	Adjustable Membrane Telephone, Transmitter	385
No. 22.	Adjustable Membrane Telephone, Receiver	385
No. 23.	Hand Telephone Membrane	387
No. 24.	Hand Telephone Membrane	387
No. 25.	Bell Hand Telephone	388
No. 26.	Bell Hand Telephone with cap piece	388
No. 27.	Heliotypes of Cross' Sound Wave Curves, I, II, III, IV	396
No. 28.	Blake's Articulate Curves	398
No. 29.	Mayer's Compound Curve	398
No. 30.	Dr. C. J. Blake Drawings	457
No. 31.	Bell Telephone of 1875, Duplicate	475
No. 32.	Bell Telephone of 1875, Sheepskin Diaphragm	475
No. 33.	Bell Telephone of 1875, Heavy Armature	475
No. 34.	Second Bell Telephone of 1875, Duplicate	479
No. 35.	Second Bell Telephone of 1875, Sheepskin Diaphragm	479
No. 36.	Bell's Application of 1876	492
No. 37.	Bell's Toronto Drawing	493
No. 38.	Bell's Single Pole Centennial Membrane Telephone	497
No. 39.	Bell's Double Pole Centennial Membrane Telephone	497
No. 40.	Bell's Centennial Iron Box Magnet Receiver	497
No. 41.	Bell's Centennial Liquid Transmitter	497
No. 42.	Bell's Memoranda of Experiments of 1876	501
No. 43.	Bell's Permanent Magnet of 1876	502
No. 44.	Bell's English Provisional Specification	503, 531
No. 45.	Bell's Speaking Telephone Metallic Disphragm	504
No. 46.	Bell's Preliminary Statement in Harmonic Interference	533
No. 47.	Bell Telephone of 1875, Duplicate Heavy Armature	541
No. 48.	Bell's Harmonic Receiver	557
No. 49.	D'Infreville Membrane Telephone, Transmitter	586
No. 50.	D'Infreville Membrane Telephone, Receiver	586
No. 51.	D'Infreville Banjo Membrane Telephone, Transmitter	587
No. 52.	D'Infreville Banjo Membrane Telephone, Receiver	587
No. 53.	Extract from Schellen	595
No. 54.	H. B. Renwick Light Armature Membrane Telephone, Transmitter	628
No. 55.	H. B. Renwick Light Armature Membrane Telephone, Receiver	628
No. 56.	H. B. Renwick Heavy Armature Membrane Telephone, Transmitter	628
No. 57.	H B. Renwick Heavy Armature Membrane Telephone, Receiver	628

2780

DEFENDANT'S EXHIBITS, INTRODUCED ON THE FOLLOWING PAGES.

	Page
Exhibit A, Bell's Pending Application of Feb. 25, 1875	28
Exhibit B, Gray's Caveat	37
Wheatstone & Cooke Patent	66
Varley Patent	66
Johnson Patent, Gray's Magnet Receiver	66
Edison Relay Magnet Patent	66
Gray's Animal Tissue Patent	67
Gray's Tuned Bar Receiver Patent	67
Gray's Magnet Receiver Patent	67
Gray's Sounding-Box Receiver Patent	67
Gray's Closed Circuit Patent	67
Gray's Caveat	67
Gray's Speaking Telephone Art Application	67
Gray's Liquid Transmitter Speaking Telephone Application	67
Gray's Concave Diaphragm Receiver Speaking Telephone Application	67
Gray's Common Receiver Patent	67
Sabine's Electric Telegraph	68
Lardner's Electric Telegraph	68
Ferguson's Electricity	68
Gray's Printer Patent	68
Gray's Double Bar Magnet Patent	68
Gray's Two-Tone Transmitter	69
Tin Plate Receiver	70
Gray's First Single-Tone Transmitter	71
Animal Tissue Violin Receiver	72
Gray's Animal Tissue Revolving Plate Receiver	72
Gray's Revolving Drum Telephone Patent	73
Paper Drum Receiver	74
Gray's Resonant Box Magnet Receiver	74
Gray's Concave Metallic Diaphragm Magnet Receiver	77
Gray's Two-Octave Transmitter	78
Gray's Closed Circuit Single-Tone Transmission Apparatus	85
Gray's Wooden Sounding Box Magnet Receiver	87
Diaphragm Box Magnet Receiver	88
Gray's Mechanical Transmitter	108
Gray's Animal Tissue Application	110
Gray's Magnet Receiver Application	110
Gray's Magnet Receiver Reissue, Art Division	110
Gray's Magnet Receiver Reissue, Apparatus Division	110
Bell and Patent Office Correspondence	156
Gray's Reed Transmitter Patent	183
Bell's London Lecture, Extract	183
Bell Apparatus, of 1876 Patent, Transmitter (E. S. Renwick)	204

2781

	Page
Bell Apparatus, of 1876 Patent, Receiver (E. S. Renwick)	204
Bell Apparatus, of 1876 Patent, Alternative Armatures (E. S. Renwick)	204
Bell's London Lecture, Second Extract	220
Bell Telephone A	268
Bell Telephone B	268
Gray's Multiple Transmitter of 1875	270
Dolbear Diagram of September 20, 1876	288
Dolbear Telephone	291
Dolbear Agreement	314
Schellen Translation	337
Gray's Organ Pipe Transmitter Patent	362
Bell Letter to Hubbard, Nov. 26, 1874	512
Bell Caveat of Oct. 27, 1874	512

2782

Circuit Court of the United States,

DISTRICT OF MASSACHUSETTS.

IN EQUITY.

No 1040.

BELL TELEPHONE COMPANY ET AL. *v.* PETER A. DOWD.

BILL OF COMPLAINT.

[FILED SEPT. 12, 1878.]

To the Honorable the Justices of the Circuit Court of the United States for the District of Massachusetts:

The Bell Telephone Company, a corporation duly established under the laws of the Commonwealth of Massachusetts, and the New England Telephone Company, a corporation duly established under said laws, bring this, their bill of complaint, against Peter A. Dowd, of Boston, in said district. And thereupon your orators complain and say that before the seventh day of March, 1876, Alexander Graham Bell, then of Salem, now of Boston, in said Commonwealth, being the original and first inventor of a new and useful improvement in telegraphy, which was never known or used before his invention thereof, and which had not at the time of his application been in public use or on sale for more than two years, made application according to law for Letters Patent of the United States to be granted to him therefor, upon which application, due proceedings being had in all respects, said Letters Patent were on the seventh day of March, 1876, granted, issued and delivered to said Alexander Graham Bell, signed by the Secretary of the Interior and countersigned by the Commissioner of Patents, and numbered 174,465, whereby there was secured to said Alexander Graham Bell, his heirs, administrators or assigns, for the term of seventeen

2783

years from the said seventh day of March, 1876, the full and exclusive right and liberty of making, constructing, using and vending to others to be used, the said improvement, a description whereof is given in the words of the said Bell, in the schedule annexed to said patent, and forming a part thereof, as by said patent, numbered 174,465, here in Court to be produced, will fully appear.

That before the thirtieth day of January, 1877, the said Alexander Graham Bell, being the original and first inventor of a new and useful improvement in electric telegraphy, which was never known or used before his invention thereof, and which had not at the time of his application been in public use or on sale for more than two years, made application according to law for Letters Patent of the United States to be granted to him therefor; upon which application, due proceedings being had in all respects, said Letters Patent were on said thirtieth day of January, 1877, granted, issued and delivered unto said Bell, signed by the Secretary of the Interior and countersigned by the Commissioner of Patents, and numbered 186,787, whereby there was secured to said Bell, his heirs, administrators or assigns, for the term of seventeen years from the said thirtieth day of January, 1877, the full and exclusive right and liberty of making, constructing, using and vending to others to be used, the said improvement, the description whereof is given in the words of said Bell in the schedule annexed to said last named patent, and forming a part thereof, as by said patent, numbered 186,787, here in Court to be produced, will fully appear.

That said Alexander Graham Bell assigned said Letters Patent, numbered respectively 174,465 and 186,787, to Gardiner G. Hubbard, trustee, by deed of assignment delivered July 9, 1877, and recorded at the Patent Office July 28, 1877, Liber R 21, page 399 of Transfers of Patents. That said Gardiner G. Hubbard, trustee, assigned said Letters Patent, numbered respectively 174,465 and 186,787, to your orators, the Bell Telephone Company, by assignment delivered July 20, 1878, and recorded at the Patent Office, , 1878, Liber , page of Transfers of Patents.

That your orators, the New England Telephone Company, by license from said Gardiner G. Hubbard, trustee, have the exclusive

2784

right to use and license others to use said inventions and improvements within the New England States.

Your orators further show, that after the grant of said Letters Patent, the inventions therein described and claimed, or substantial and material parts of the same, embodied in instruments known as Bell Telephones, were introduced into public use by the said Bell, the said Hubbard, trustee, and your orators. That many thousands of persons have put the said inventions into daily use under the authority and license of the said Hubbard and your orators and those holding rights or licenses under them, and have paid for such use of said inventions the amount fixed by said Hubbard and your orators as a reasonable compensation therefor, such payments amounting in the aggregate to many thousands of dollars. That the fact that said Bell was the original and first inventor of said inventions, and that the patents above named are good and valid patents, has been generally recognized and acknowledged by those who have used the inventions and the public generally, and the claims of the said Bell, Hubbard, and your orators to the exclusive right to the said inventions under said patents have been generally acknowledged and acquiesced in. That from time to time several persons have attempted to make, sell, and use telephones, or parts thereof, embracing said inventions, but that in such cases said Hubbard while owner of, and your orators, since they have owned said patents, have immediately, upon hearing of such acts or attempts, notified such parties to desist therefrom, and that such parties have generally, upon receiving such notices, complied therewith, and acquiesced in and recognized as valid the claims of said Hubbard and your orators under said patents; and said Bell, said Hubbard and your orators have always asserted and maintained, and but for the wrongful acts of the defendant would and have hitherto almost universally enjoyed the sole and exclusive right to practise said inventions; that they have not acquiesced in any infringement of their exclusive rights; and that the said exclusive rights of your orators are of great value to them.

Yet the defendant, well knowing the premises and the exclusive rights of your orators as aforesaid, but contriving to injure your orators and to deprive them of the benefit and advantage which might

2785

and otherwise would accrue to them from said inventions, without the license or consent of your orators and in infringement of the said patents, during the year 1877 till this time, as your orators are informed and believe, has sold and used telephones embracing the inventions secured to your orators in said Letters Patent, or substantial and material parts of them, the several improvements secured to your orators by said patents, and is still using the said several improvements at said Boston and introducing the same into use without license from the owners of said patents, but precisely how long the defendant has sold and used the said several improvements and to what extent he has sold and used them, your orators, for want of a discovery thereof, do not know and cannot set forth, and they pray that the defendant may be made to set forth the same in answer.

And your orators have requested the said defendant to acknowledge their rights in the premises and to desist and refrain from the said acts and from disregarding and infringing your orators' said rights, and to account with and pay to your orators what is justly due to your orators by reason of said infringement.

But now so it is, may it please your Honors, that the defendant wholly refuses so to do; but on the contrary continues and threatens to continue said infringement of the rights of your orators aforesaid, and thereby causes irreparable injury to your orator's lawful business. All which is contrary to equity and good conscience.

To the end, therefore, that the said defendant may if he can show why your orators should not have the relief herein prayed, and may upon his oath, and according to his best and utmost knowledge, remembrance, information or belief, full, true, direct and perfect answer make to all and singular the matters hereinbefore stated and charged, as fully and particularly as if the same were here repeated, and be especially interrogated as to each and every of said matters, and more especially may answer, discover and set forth whether during any and what period of time, and whether at said Boston or elsewhere, and where he has used said improvements, or either of them; and whether he has sold or introduced into use the various parts of telephones, and how many he has sold or introduced, and

2786

to whom he has sold or introduced the same, and how the said telephone and the several parts of the same are constructed and used.

And that the defendant may be decreed to account for and to pay over to your orators all gains and profits resulting from said infringements, and all damages sustained by your orators thereby; and may be restrained, together with his servants and agents, by an injunction to be issued out of this honorable Court, or by one of your Honors, according to the law in such case provided, from making, selling or using the said improvements, patented as aforesaid, or either of them; and that he may also be enjoined and restrained as aforesaid, during the pendency of this suit, and for such other and further relief in the premises as the nature of the case may require and to your Honors shall seem meet.

May it please your Honors to grant unto your orators, not only a writ of injunction, but also a writ of *subpœna*, to be directed to the said Peter A. Dowd, commanding him at a certain time and under a certain penalty, therein to be limited, personally to be and appear before your Honors and this honorable Court, then and there to answer unto this bill of complaint, and to do and receive what to your Honors shall seem meet in the premises.

BELL TELEPHONE CO.,
By its President,
GARDINER G. HUBBARD.

NEW ENGLAND TELEPHONE CO.,
By THOMAS SANDERS, *President.*

CHAUNCEY SMITH,
C. E. HUBBARD,
of Counsel.

STATE OF NEW YORK.

On this ninth day of September, 1878, personally appeared the above named Gardiner G. Hubbard and made oath that he had read the foregoing bill of complaint by him subscribed, and understands its contents, that the same are true of his own knowledge except

2787

as to matters stated on information and belief, and as to those matters he believes the same to be true.

Before me,

[SEAL] S. E. BROWNE,
Notary Public, Kings Co.
Cert. Filed in New York Co.

COMMONWEALTH OF MASSACHUSETTS,
SUFFOLK, ss.

On this twelfth day of September, 1878, personally appeared the above named Thomas Sanders and made oath that he had read the foregoing bill of complaint by him subscribed, and understands its contents, that the same are true of his own knowledge except as to matters stated on information and belief, and as to these matters he believes the same to be true.

Before me,
CHAS. EUSTIS HUBBARD,
[SEAL] *Notary Public.*

ANSWER.

[FILED NOV. 4, 1878.]

The answer of Peter A. Dowd, defendant, to the bill of complaint of Bell Telephone Company and New England Telephone Company, complainants.

This defendant, now and at all times hereafter saving and reserving unto himself all and all manner of benefit and advantage of exception that can or may be taken or had to the many errors, uncertainties and insufficiencies in the said bill of complaint contained, for answer thereto or unto so much thereof as he is advised it is material or necessary for him to make answer unto, answering, says: —

That he does not know and is not informed save by said bill, whether or not either of said complainants is a corporation established as alleged in said bill, and he leaves the complainants to make such proof thereof as they may be advised is material.

2788

And this defendant, further answering, admits that Letters Patent of the United States, numbered 174,465, were on the seventh day of March, 1876, granted to Alexander Graham Bell for an alleged new and useful improvement in telegraphy, but whether or not said Letters Patent were applied for or issued as stated in said bill, this defendant does not know and is not informed save by said bill, and leaves the complainants to make such proof thereof as they may be advised is material.

And this defendant, further answering, admits that Letters Patent of the United States, numbered 186,787, were on the thirtieth day of January, 1877, granted to said Bell for an alleged new and useful improvement in electric telegraphy, but whether or not said Letters Patent were applied for or issued as stated in said bill, this defendant does not know and is not informed save by said bill, and leaves the complainants to make such proof thereof as they may be advised is material.

And this defendant, further answering, says that he does not know and is not informed save by said bill whether either of the assignments mentioned therein was made or recorded as alleged, or whether or not the complainant, the New England Telephone Company, has received license as mentioned in said bill, and he leaves the complainants to make such proof thereof as they may be advised is material.

And this defendant, further answering, on information and belief avers that long before any invention by said Bell of the alleged improvement specified as his invention in said Letters Patent, numbered 174,465, the same was known to and used by Elisha Gray, now of Highland Park, Illinois, at Oberlin and Cleveland, Ohio, at Highland Park and Chicago, Illinois, and at the city of New York; by Thomas A. Edison, now of Memlo Park, New Jersey, at the city of New York, and at said Memlo Park; by Amos E. Dolbear, now of Somerville, Massachusetts, at said Somerville; by Alfred G. Holcomb, now of Granby, Connecticut, at the city of New York; by Philip H. Vanderweyde, of said city of New York, at said city; by W. F. Channing of Providence, Rhode Island, at said Providence; by Benjamin F. Edmands, now deceased, formerly of Boston, Massachusetts, at said Boston and Washington, D. C., and at said city of

2789

New York; by James Hamblett, Jr., now of Brooklyn, N. Y., at said Boston, Washington and city of New York.

And this defendant, further answering, on information and belief avers that long before any invention by said Bell of the alleged improvement specified as his invention in said Letters Patent, numbered 174,465, the same was described in and patented by the following Letters Patent, viz.: Letters Patent granted by the United States in the year 1873 to Thomas A. Edison and George Harrington, dated Aug. 12, 1873, numbered 141,777; Letters Patent granted by the United States to William Thomson in the year 1874, dated Nov. 17, 1874, numbered 156,897; Letters Patent granted by the government of Great Britain in the year 1840, to Charles Wheatstone, dated Jan. 21, 1840, and numbered 8345.

And this defendant, further answering, on information and belief avers that long before any invention by said Bell of the alleged improvement specified as his invention in said Letters Patent, numbered 174,465, the same was described in the following printed publications, viz.: "Electricity and Magnetism," by —— Jenkins, published in London, England, and in the city of New York in the year 1873, at page 334. "Der Elecktromagnetische Telegraph," by H. Schellen, published at Brunswick, Germany, in the year 1867, at pages 468 and 469. "The Electric Telegraph," by R. Sabine, published at London, England, in the year 1867, at pages 45 and 46. "The Electric Telegraph," by Dr. Lardner, new edition, revised by E. B. Bright, published in said London in the year 1867, at pages 164, 165, 166 and 167.

And this defendant, further answering, on information and belief says, that if said Bell ever had any right to a patent for the alleged improvement specified as his invention in said Letters Patent, numbered 174,465, or any right to have the same secured to him by Letters Patent, he abandoned and forfeited the same and lost all such right by his delay in applying for Letters Patent, and by the same having been put into public use and on sale more than two years before his application for a patent therefor.

And this defendant, further answering, says that he is advised and avers that the specification of said Letters Patent, numbered 174,465,

does not sufficiently describe the things attempted to be covered by the claims thereof, to enable persons skilled in the art or science to which it appertains, or with which it is most nearly connected, to make, construct and use the same, and that the alleged improvements attempted to be patented in the said Letters Patent did not involve or require invention, and did not differ in any patentable respect from what was before said alleged invention known and used in this country, or described in patents and printed publications.

And this defendant, further answering, on information and belief denies that said Bell was the original and first inventor of the alleged improvement specified as his invention in said Letters Patent, numbered 186,787, and avers that long before any invention thereof by him, the same was known to and used by Elisha Gray, now of Highland Park, Illinois, at the city of New York, at Oberlin and Cleveland, Ohio, and at Highland Park and Chicago, Illinois; by Thomas A. Edison, now of Memlo Park, New Jersey, at the city of New York and at said Memlo Park; by Amos E. Dolbear, now of Somerville, Massachusetts, at said Somerville; by Alfred G. Holcomb, now of Granby, Connecticut, at said city of New York; by Philip H. Vanderweyde, of said city of New York, at said city; by W. F. Channing, of Providence, Rhode Island, at said Providence; by the United States Telegraph Company at Pittsburg, Pennsylvania, which company was located at said Pittsburg; by George A. Hamilton, now of Elizabeth, New Jersey, at said Pittsburg.

And this defendant, further answering, on information and belief avers that long before any invention by said Bell of the alleged improvement specified as his invention in said Letters Patent, numbered 186,787, the same was described in and patented by the following Letters Patent, viz.: Letters Patent granted by the government of Great Britain in the year 1874, to J. H. Johnson, dated July 29, 1874, and numbered 2,646; Letters Patent granted by the Patent Office of the Dominion of Canada in the year 1875, to Elisha Gray, dated July 7, 1875, numbered 4,749; Letters Patent granted by the United States in the year 1875, to Elisha Gray, dated July 27, 1875, numbered 166,095; Letters Patent granted by the United States in the year 1876, to Elisha Gray, dated April 11, 1876, numbered 175,971.

2791

And this defendant, further answering, on information and belief avers that long before any invention by said Bell of the alleged improvement, specified as his invention in said Letters Patent, numbered 186,787, the same was described in the following printed publications, viz.: "Der Elecktromagnetische Telegraph," by Dr. H. Schellen, published at Brunswick, Germany, in the year 1867, at pages 411, 412, 413, 414, 429, 430, 431, 432, 433, 434, 435, 436, 437, 438, 468, and 469; "Zeitschrift des Deutsch-osterreich-ischen telegraphen verein," published at Berlin, Prussia, in the year 1862, Volume IX, at page 25. "The Electric Telegraph," by R. Sabine, published in London, England, in the year 1867, at pages 136, 137, and 138; "The Telegraphic Journal," published in said London, in the year 1872, Volume I, at page 4; "Electricity," by R. M. Ferguson, published in said London and at Edinburgh, Scotland, in the year 1867, at pages 257 and 258; "The Telegrapher," published in said city of New York in the year 1869, Volume V, number thirty-nine at page ; "The Manufacturer and Builder," published in said city of New York, in the year 1869, Volume I, at page 129; "Wonders of Electricity," by J. Baile, published in said city of New York, in the year 187-, at pages 140, 141, 142, and 143; "The Telegraphic Journal," published at said London in the year 1875, Volume III, at pages 286, 287 and 288.

And this defendant, further answering, on information and belief says that if said Bell ever had any right to a patent for the alleged improvement specified as his invention in said Letters Patent, numbered 186,787, or any right to have the same secured by Letters Patent, he abandoned and forfeited the same and lost all such right by his delay in applying for Letters Patent, and by the same having been put into public use and on sale more than two years before his application for a patent therefor.

And this defendant, further answering, says that he is advised and avers that the specification of said Letters Patent, numbered 186,787, does not sufficiently describe the things attempted to be covered by the claims thereof, to enable persons skilled in the art or science to which it appertains, or with which it is most nearly connected, to make, construct and use the same, and that the alleged improvements, attempted to be patented in the said Letters Patent, did not

involve or require invention, and did not differ in any patentable respect from what was before said alleged invention known and used in this country or described in patents and printed publications.

And this defendant, further answering, on information and belief says that there is no mechanical combination between the elements constituting the sixth claim of said Letters Patent, No. 186,787; and that no invention was required to produce the same.

And this defendant prays the same benefit of the facts and things herein set forth as if for the reason thereof he had demurred to said bill where a demurrer would have been proper, and the same benefit thereof as if he had specially pleaded to the said bill where a special plea would have been proper.

And this defendant denies that the telephones sold and used by him infringe any valid claim of either of said patents, No. 174,465 and No. 186,787, and submits to this honorable Court that said complainants have no right to any further answer to said bill or any part thereof than is hereinbefore contained, and no right to any injunction, account or other relief prayed for in said bill, and this defendant prays to be hence dismissed with his reasonable costs and charges in this behalf most wrongfully sustained.

P. A. DOWD.

STATE AND DISTRICT OF MASSACHUSETTS,
COUNTY OF SUFFOLK, ss.

At Boston in said county on this fourth day of December, A. D. 1878, personally appeared the above named Peter A. Dowd, and made solemn oath that he has read the foregoing answer by him subscribed, and understands the contents thereof, and that the same is true so far as stated of his own knowledge, and that as to matters therein stated as of his information and belief he verily believes the same to be true.

Before me,

[SEAL] J. HENRY TAYLOR,
Notary Public.

2793

REPLICATION.

[FILED DEC 9, 1878.]

The replication of the Bell Telephone Company and New England Telephone Company, plaintiffs, to the answer of Peter A. Dowd, defendant.

These repliants, saving and reserving unto themselves all and all manner of advantage of exception to the manifest insufficiencies of the said answer, for replication thereunto say:

That they will aver and prove their said bill to be true, certain and sufficient in the law to be answered unto, and that the said answer of the said defendant is uncertain, untrue, and insufficient to be replied unto by these repliants, without this, that any other matter or thing whatever in the said answer contained, material or effectual in the law to be replied unto, confessed and avoided, traversed or denied, is true. All which matters and things these repliants are and will be ready to aver and prove as this honorable Court shall direct, and humbly pray as in and by their said bill they have already prayed.

By their attorney,

C. E. HUBBARD.

STIPULATION.

[FILED JAN. 30, 1879.]

It is agreed and stipulated that the amendment to answer, filed January 16, 1879, by consent as of November 4, 1878, be withdrawn from the files of the Court, and that the amendment to answer sworn to January 27, 1879, may be filed in place thereof as of November 4, 1878, and that the replication already filed shall apply to the answer as above amended.

CHAUNCEY SMITH, *for Plaintiffs.*
BROWNE, HOLMES & BROWNE,
for Respondent.

2794

AMENDMENT TO ANSWER.

[FILED JAN. 30, 1879, BY CONSENT AS OF NOV. 4, 1878.]

And now the defendant moves the Court for leave to amend his answer to the bill of complaint as follows: —

1. By inserting after the words "known to and used by Elisha Gray, now of Highland Park, Illinois," where they first occur, the words following, viz.: "at Washington, D. C., at Philadelphia, Pa."

2. By inserting after the words and figures "Charles Wheatstone, dated January 21, 1840, and numbered 8,345," the words and figures following, viz.: "Letters Patent granted by the government of Great Britain to John Henry Johnson, dated July 29th, 1874, and numbered 2,646; Letters Patent granted by the government of Great Britain to said Johnson, dated March 16, 1875, and numbered 974; Letters Patent granted by the United States to Elisha Gray, dated July 20th, 1875, and numbered 165,728; Letters Patent granted by the United States to said Gray, dated July 27, 1875, and numbered 166,094; Letters Patent granted by the United States to said Gray, dated July 27, 1875, and numbered 166,095; Letters Patent granted by the United States to said Gray, dated Feb. 15, 1876, and numbered 173,460; Letters Patent granted by the United States to said Gray, dated Feb. 15th, 1876, and numbered 173,618."

3. By inserting after the words "patents and printed publications," where they first occur, the following, viz.: "And this defendant, farther answering, on information and belief says, that at the time, to wit, February 14, 1876, when the application of said Bell for said patent number 174,465, was filed, there was pending in the Patent Office the application of the said Elisha Gray, which had been filed January 27, 1876, for the patent afterwards granted to said Gray, January 16, 1877, in which application, as well as in the patent finally granted to him thereupon, the said Gray described and represented certain improvements not contained in any previous patent of his, and which are claimed in the said Bell patent number 174,465, the same having been really first invented by the said Gray, but the said Gray, by inadvertence, accident, and mistake and only so, did not in his said application make claim to the same; and that the Commissioner of

2795

Patents — whether overlooking said pending application of Gray, or erroneously judging that it did not contain the subject matter so claimed by Bell, this defendant is not advised and cannot say — failed to declare an interference between the said application of Bell, claiming said improvements, and the said application of Gray describing and representing the same, and have the issue of priority of invention thereof tried between the two parties, and refuse the said patent to the said Bell unless said issue of priority was determined in his favor, all as by law provided for such cases of interference; but unadvisedly granted and issued the said Bell patent number 174,465, without any notice to said Gray, or any interference as aforesaid; and that afterwards and after said Bell patent became public, and before this bill was filed, the said Gray filed his application according to law for reissue of his said patent of January 16, 1877, claiming in said application as of his own invention the said improvements which are the subject of the said Bell patent number 174,465, and said application for reissue was rejected upon reference to the said Bell patent, and as this defendant is advised and believes will involve an interference therewith; to try the question of priority of invention between the parties and the right of the said Gray to a patent for said improvements; and that the telephones sold and used by this defendant and alleged in the bill to be infringements of said Bell patents numbered 174,465 and 186,787, have all been sold and used under said Gray's authority and license as grantee of his said patent of January 16, 1877, and owner of all rights of reissue as such patentee; wherefore this defendant submits that the complainants herein ought not to have and maintain their said bill against him because of the said application of Gray for reissue, and the said interference thereof with the said patent number 174,465, when this bill was filed, and he claims the same benefit hereof as if the same had been pleaded to so much of the complainants' bill as seeks relief against him on said patent number 174,465."

4. By inserting after the words, "known to and used by Elisha Gray, now of Highland Park, Illinois," where they last occur in said answer, the words following, viz., "at Washington, D. C., at Philadelphia, Pa."

5. By inserting after the words and figures, "J. H. Johnson,

dated July 29, 1874, and numbered 2646," the words and figures following, viz., "Letters Patent granted by the government of Great Britain to said Johnson, dated March 16, 1875, and numbered 974; Letters Patent granted by the government of Great Britain to George Tomlinson Bousfield, dated May 4, 1876, and numbered 1874."

6. By inserting after the words and figures, "Elisha Gray, dated July 7, 1875, numbered 4,749," the words and figures following, viz., "Letters Patent granted by the United States to said Gray, dated July 20, 1875, and numbered 165,728; Letters Patent granted by the United States to said Gray, dated July 27, 1875, and numbered 166,094."

7. By inserting after the words and figures following, viz., "Elisha Gray, dated July 27, 1875, numbered 166,095," the words following, viz., "Letters Patent granted by the United States to said Gray, dated February 15, 1876, and numbered 173,460; Letters Patent granted by the United States to said Gray, dated February 15, 1876, and numbered 173,618."

8. By inserting after the words and figures following, viz., "Elisha Gray, dated April 11, 1876, numbered 175,971," the words and figures following, viz., "Letters Patent granted by the United States to the said Gray, dated January 16, 1877, and numbered 186,340."

9. By inserting after the words, "no invention was required to produce the same," the following, viz., "And this defendant, further answering, on information and belief says that on the same day that the said Bell filed his application for said patent number 174,465, and many months before, but less than twelve months before, he filed his application for his patent number 186,787, the said Gray having, before any invention thereof by the said Bell, invented certain of the improvements claimed in said patents which were not described or claimed in any patent previously taken by said Gray; but desiring farther time to mature the same and having paid the fee required by law, filed in the Patent Office a caveat, in pursuance of the statute for such cases provided, setting forth the design thereof and its distinguishing characteristics, and praying protection of his right until he should have matured his invention;

whereupon, as this defendant is advised, the said Gray became entitled to notice of said applications for patent by said Bell, and to have the same suspended until he, the said Gray, should within three months complete his application for patent by filing his description, specification, drawings and model, and then to have an interference declared according to law, and the question of priority of invention of the subjects so claimed by said Bell as between himself and the said Gray tried and determined in the Patent Office before any patent should issue to either therefor; but as this defendant is informed and believes, the Commissioner of Patents, neglecting his duty in the premises, and while the said Gray was using due diligence in adapting and perfecting his invention of said improvements, granted and issued the said patents to the said Bell, without giving said Gray any notice of the pendency of said Bell's application therefor, or opportunity of completing his own application as aforesaid, and of contesting with the said Bell the priority of invention as aforesaid; and upon these facts the defendant is advised and submits to the Court that such granting and issue were in violation of law, and that such obtaining of said patents by said Bell was in contemplation of the statute for such cases provided, surreptitious and unjust; and he further says that the said Gray did after his filing of his said caveat, and in pursuance of due diligence as aforesaid, succeed in adapting and perfecting his said invention, and he submits that said patents are each of them void; and he further says that all the telephones sold and used by him, and which are alleged in the bill to be infringements of the said Bell patent, have been and are so sold and used, under license of the said Gray, as the original and first inventor of the improvements which were the subject of his caveat as aforesaid.

"And this defendant, further answering, says that the subjects of certain of the claims of the said patent number 186,787, particularly the first claim thereof, are described in the said patent number 174,465, and submits that such claims are therefore void."

P. A. DOWD.

STATE AND DISTRICT OF MASSACHUSETTS, }
COUNTY OF SUFFOLK, ss. }

At Boston, in said county, on this twenty-seventh day of January, A. D. 1879, personally appeared the above named Peter A. Dowd and made solemn oath that the foregoing amended answer by him subscribed is true of his own knowledge, except such matters as are therein stated on information and belief, which he verily believes to be true.

Before me,

[SEAL] J. HENRY TAYLOR,
Notary Public.

EVIDENCE FOR COMPLAINANT.

TAKEN PURSUANT TO THE SIXTY-SEVENTH RULE OF THE SUPREME COURT OF THE UNITED STATES, IN EQUITY, AS AMENDED, BEFORE ME,

W. P. PREBLE, JR., *Examiner.*

BOSTON, Jan. 25, 1879.

Present: CHAUNCEY SMITH, Esq., and C. E. HUBBARD, Esq., *of Counsel for Complainant;*
CAUSTEN BROWNE, Esq., *of Counsel for Defendant.*

[*Complainant's counsel put in evidence certified copy of Letters Patent, granted to Alexander Graham Bell, March* 7, 1876, *No.* 174,465, *marked "Complainant's Exhibit* 1, *W. P. Preble, Jr., Examiner." Also, certified copy of Letters Patent, granted to Alexander Graham Bell, Jan.* 30, 1877, *No.* 186,787, *marked "Complainant's Exhibit* 2, *W. P. Preble, Jr., Examiner." Also, certified copy of assignment from A. G. Bell to G. G. Hubbard, trustee, of certain Letters Patent, recorded Lib. R* 21, *page* 399, *marked "Complainant's Exhibit* 3, *W. P. Preble, Jr., Examiner." Also, certified copy of assignment from G. G. Hubbard, trustee, to Bell Telephone Co., recorded Lib. Y* 22, *page* 460, *marked "Complainant's Exhibit* 4, *W. P. Preble, Jr., Examiner." Also, certified copy of an exclusive license for New England, from Gardiner G. Hubbard, trustee, to*

2799

New England Telephone Co., recorded Lib. , page , marked "Complainant's Exhibit 5, W. P. Preble, Jr., Examiner."

Also, a box telephone, called the Phelps Box Telephone, marked "Complainant's Exhibit 6, W. P. Preble, Jr., Examiner." Also, a telephone called the Phelps Duplex Telephone, marked "Complainant's Exhibit 7, W. P. Preble, Jr., Examiner." Also, a telephone called the "Crown" Telephone, marked "Complainant's Exhibit 8, W. P. Preble, Jr., Examiner."]

[*The defendant admits that prior to the filing of the bill he had used, in Boston, instruments like each of those marked "Exhibits 6, 7, and 8," connected in an electric circuit for transmitting and receiving spoken words and messages.*]

DEPOSITION OF HENRY B. RENWICK.

Direct Examination by CHAUNCEY SMITH, Esq., *of Counsel for Complainant.*

Int. 1. Please state your name, age, residence, and occupation.

Ans. Henry B. Renwick; sixty-one years of age. I reside in the city of New York. I am by profession a civil and mechanical engineer, and have for the last fifteen years been principally occupied in matters relating to machinery, processes and patents.

Int. 2. State how far your experience in relation to the matters mentioned in the last answer have been directed to the comparison of machines and inventions with reference to their substantial likeness or differences, and especially with reference to electrical machines or electro-magnetic apparatus.

Ans. I have been frequently, during every year for the last twenty-five years, or perhaps more, examined as expert in suits in which patents were in question, among which, I think, were three or more relating to electro-magnetic telegraphs, and I have taken out some and reissued other patents relating to telegraph and telegraphic machinery, and when taking out one of those patents and reissuing one of the others, I had occasion to examine carefully all descriptions in patents or other places of all telegraphic machines or apparatus prior to the dates of the patents in each case.

Int. 3. Have you examined the two patents which have been

put in evidence, and marked "Exhibits 1 and 2," granted to Alexander Graham Bell, and numbered, respectively, 174,465 and 186,787, and made yourself acquainted with the mechanism or apparatus therein described?

Ans. I have carefully examined the patents named in the question, and believe I understand the apparatus described in them.

Int. 4. If you find in the patent Exhibit No. 1 a description of an apparatus for transmitting or reproducing vocal sounds, will you state what the agencies or instrumentalities are which are brought into play to produce that result, and how the apparatus operates under the force accompanying or derived from sounds to reproduce the sounds?

Ans. I do find, described in Exhibit No. 1, an apparatus for transmitting to a distance the sounds of the human voice (vocal sounds). In order to understand the operation of the apparatus, it is necessary to read the whole patent, but the apparatus itself is described towards the end of the patent before the claims, and is represented at Fig. 7 of the drawings thereof. The apparatus consists essentially of two electro-magnets connected by a wire, one magnet at the receiving and the other at the transmitting station; second, of two diaphragms and two armatures, one set for each station, placed in such relation to the magnets that the armature will be acted upon by the varying force of the magnet at the receiving end of the apparatus, and so that the armature at the other end, when vibrated by the vibrations of the diaphragm, will cause the attractive force of the magnet at the receiving end to vary. These diaphragms are described in the patent as made of a stretched membrane, and the armature of a piece of spring steel attached at one end to the diaphragm and hinged at the other end, so that when the diaphragms vibrate the armatures also vibrate, and *vice versa*. There is shown in the drawings a battery connected with the line in the usual manner, and the operation of the apparatus is as follows: When the diaphragm at the transmitting end is set in vibration by the sounds of the human voice, its armature vibrates with it in front of the magnet at the transmitting station, and by the vibrations of the armature, electrical undulations, as the patent calls them, are created in the circuit, which vary the attractive force of the magnet at the receiving station; and this

2801

varying force of the magnet at the receiving station causes the armature in front of it and the receiving diaphragm to vibrate in a similar manner to that in which the transmitting diaphragm vibrates; and it is stated in the patent, in substance, as the result of this apparatus, that the motions of the armature at the transmitting end, due to the action of the human voice on the diaphragm, are copied by the armature at the receiving end, and consequently by the diaphragm attached to it, so that a sound similar to that uttered in the transmitting end is heard to proceed from the diaphragm at the receiving end. It follows from this, that if a word be spoken in front of the transmitting diaphragm, that diaphragm will be set into vibration resulting from such enunciation of the word, that the receiving diaphragm will copy these vibrations, and that the word will be heard by a person having his ear at the diaphragm of the receiving end of the apparatus.

Int. 5. Will you state whether or not you find either of the claims of the patent, as you understand them, to refer especially to the apparatus which you have described, and if so, to which one of them?

Ans. I find that the fifth claim of the patent refers to the apparatus which I have described, and which is represented in Fig. 7 of the drawings.

Int. 6. Have you examined the instruments which have been produced in evidence as those used by the defendant, marked respectively Exhibits 6, 7 and 8?

Ans. I have, and have taken them apart, so as to be able to inform myself accurately as to their construction.

Int. 7. Assuming these instruments to be used respectively in the manner specified in the admission of the defendant accompanying their introduction in evidence, will you state how you find them to correspond with or differ from substantially the apparatus described in Mr. Bell's patent, marked Exhibit 1, and referred to in the fifth claim, with respect to the results to be secured by the use of the instruments, the agencies employed in the apparatus, and the manner in which the apparatus is operated by vocal sounds or by the force accompanying or derived from such sounds?

Ans. I will answer, first, with regard to results to be secured by

the use of the instruments, Exhibits 6, 7 and 8. The results in all of them are the same when used as stated in the question, namely, that when a word is spoken to that end of the instrument which is the transmitting instrument, it is heard by the person applying his ear to the receiving instrument at the other end of the wire. And in these respects all these instruments are like the apparatus described in Bell's patent. In all three of these instruments there is a diaphragm, one for the receiving and one for the transmitting instrument, and in Exhibits 6 and 7 these diaphragms are duplicated, but as each diaphragm acts precisely like the other, I will leave out, for the present, reference to more than one diaphragm. These diaphragms in all the instruments are of iron instead of some membraneous substance, as described in Bell, and therefore the diaphragm itself acts as the diaphragm and armature of Bell, which diaphragm and armature of Bell, as I have stated before, are connected and move together. In all of these exhibits this diaphragm is placed in front of one pole of a permanent magnet, and the magnets are surrounded by the ordinary spool with its coil of wire, and this wire is in practice extended from the wire coil of one station to the wire coil of the other station, the usual ground connections being made with the other end of the wire from each spool, as shown in Bell's patent. Now, these diaphragms of Exhibits 6, 7 and 8 are placed in the same relation to the magnets that they are in Bell's apparatus, and when the diaphragm at the transmitting end is set in vibration by a word spoken to it, it causes what Mr. Bell calls electrical undulations in the circuit, which vary the power of the magnet at the receiving end, so that the diaphragm at the receiving end is set into vibrations, corresponding with those of the transmitting end, and consequently a word spoken at one end of the line or circuit to the diaphragm is audible to the ear of the operator at the receiving end, the sound at this last person's ear being produced by the vibrations of the diaphragm at the receiving end. The magnets are of different forms in all three of these instruments, and in Exhibits 6 and 8 of a form different from that shown in Bell's patent; but I do not understand that Mr. Bell's invention is limited to any special form of magnet, provided it is arranged and combined in an apparatus in such a way as to produce the same effect as it does in Bell's.

2803

In all these exhibits, as I have before stated, the diaphragms are of metal; but I do not understand that Mr. Bell's invention is limited to a diaphragm made of any special material, so long as it is capable of being set into vibrations corresponding with the word uttered by the voice, or by the electrical undulations which vary the force of the magnet at the receiving end of the apparatus. Bell's diaphragm and armature are made of two pieces, but move and act together, and in the Exhibits 6, 7 and 8 the diaphragm and armature are the same piece, but both structures perform precisely the same duty in the apparatus, and acting in substantially the same way to perform it, although there is no doubt that the metal diaphragm gives a louder tone at the receiving end than the membraneous diaphragm. In Bell's apparatus, as specially described in his patent, the cores inside of the bobbin and coils become magnetic under the influence of a battery, while in the Exhibits 6, 7 and 8 the cores are permanently magnetic. The effect is the same in kind whether the magnetism of the core be produced by permanently magnetizing it, or by temporarily magnetizing it through the aid of a battery. And as I understand it, the electrical undulations which are caused by the motion of the armature of the transmitting diaphragm, and which undulations are the effective agents in causing the motion of the receiving diaphragm, are undulations which are due to the motion of the transmitting armature in front of the pole of a magnet, and not due to the effect of a battery, so that these electrical undulations are the same whether a temporary magnet or a permanent magnet be used as the core of the coils. The apparatus of Mr. Bell is the speaking telephone in its simplest form, and there are many refinements of construction found in these instruments 6, 7 and 8, which do not materially alter the mode of operation of the apparatus described by Bell. I do not deem it necessary to describe these niceties of construction and adjuncts to the apparatus, and state as the result of my examination of these contrivances, 6, 7 and 8, that they contain the invention referred to in the fifth claim of the Bell patent, Exhibit No. 1. All three of these forms of apparatus are operated in the same way as Bell's. A word is spoken to the transmitting diaphragm and sets it in vibration. The vibration of this diaphragm, which is both diaphragm and arma-

ture, in front of the magnet at the transmitting end, causes electrical undulations in the circuit, thus varying the force of the magnet at the receiving end, and this varying force of the magnet at the receiving end sets the diaphragm of the receiving end into vibrations corresponding to those of the transmitting diaphragm, this receiving diaphragm, therefore, giving out the same sound as that which was imparted to the transmitting diaphragm. I have not stated it before, and state it now, lest it may lead to mistake, that the sounds heard at the receiving end are, in none of these instruments that I have tried, as loud at the receiving end as those that were uttered at the transmitting end, and that they are also to my ear not quite so articulate.

Int. 8. Will you now turn your attention to the second patent of Mr. Bell, which has been produced in evidence, marked Exhibit 2, dated Jan. 30, 1877, and numbered 186,787, and state whether you find described in it an apparatus for transmitting vocal sounds, and if so, whether you find described in it any modifications or improvements upon the apparatus referred to in your last answer, and what advantages, if any, you find which appertain to such modifications?

Ans. In Bell's patent, Exhibit 2, I do find described an apparatus for transmitting vocal sounds, and certain modifications and improvements upon the apparatus described in the Bell patent No. 1. In the instrument described in patent No. 2, the diaphragm is represented as made of metal, preferably of iron, and in my opinion an iron or metallic diaphragm is better than one made of membrane, because it is not susceptible to variations of its elastic condition by reason of the hygrometric changes of the atmosphere, and because its elasticity does not vary after use for a considerable time, while the membraneous diaphragm does so vary at the transmitting end, owing to the action of the breath upon it. Moreover, the metallic diaphragm gives out a louder sound at the receiving end than a membraneous diaphragm, when the sounds at the transmitting end are of equal loudness. This second Bell patent also describes a box, called in the patent a cover or sounding box, which encloses that end of the diaphragm which is farthest from the speaker at one end or the hearer at the other, and thus prevents vibrations

2805

of the air, due to noises in the room or other causes, from affecting the vibrations of the diaphragm. It also describes what is called in the patent a speaking tube for conveying sounds to or from the diaphragm. And also it describes a magnet with a coil at the end of the bar, two modifications of which are represented in the drawing, one in Figs. 3 and 4, and another in Figs. 5 and 6, where the coils are only around that part of the magnet which is immediately adjacent to the pole or poles thereof, or, as in Figs. 5 and 6, are wound around pole pieces, that is, pieces of iron extending from that which is usually called the pole of the magnet. I do not understand that these particular forms of magnet are new by themselves; on the contrary, I understand that they were old forms of magnets, and differ in degree only and not in kind from magnets in which the coil extends over a greater portion of the magnet, whether the core be permanently or temporarily magnetic. He further describes in this patent the working of the speaking telephone by the use of a permanently magnetic core, instead of a core temporarily magnetized by the employment of a battery. As I understand from books, the location of the coil wire described in this patent is an advantageous one, more advantageous than when the coil covers a greater portion of the magnet in the usual manner, and it is certainly useful to dispense with the battery.

Int. 9. Will you refer to the defendant's telephones, Exhibits 6, 7 and 8, and state how far, if at all, you find them to embrace substantially any of the inventions which, as you understand it, are described in the patent last referred to, and are the subject of the 3d, 6th, 7th, and 8th claims?

Ans. The third claim, as I understand it, is to the combination of an iron or steel diaphragm with what the claim terms an electro-magnet, in such manner that the diaphragm can be either thrown into vibrations by the movement of the surrounding air or that it can be thrown into vibrations by the attraction of a magnet. When the diaphragm is at the transmitting end, it is thrown into vibrations by the movement of the surrounding air, and when it is at the receiving end or is used as the receiving diaphragm, it is thrown into vibration by the attraction of a magnet. By the word "electro-magnet" in this claim I understand that the patentee means a magnet

surrounded by a coil of wire, whether that magnet be a permanent magnet or be a core of soft iron, made magnetic by the action of a battery in the usual way. And I understand this for two reasons: first, because the combination of the two instrumentalities acts in the same way whether the core be permanently magnetic or temporarily magnetized, and second, because the patent itself calls a magnet having a permanently magnetic core surrounded by a wire an electro-magnet, the magnet O being described in one place as a compound permanent magnet provided with helices or coils of insulated wire, and the same magnet O being afterwards called an electro-magnet. All the forms of apparatus 6, 7 and 8 have iron diaphragms, and they all have electro-magnets in the sense in which that word is used in the third claim, and these two are so combined and supported that the diaphragm can be thrown into vibration by the movement of the surrounding air or by the attraction of a magnet. In my opinion, therefore, each of the exhibits 6, 7 and 8 contains the invention referred to in the third claim of Exhibit 2. The invention referred to in the sixth claim is the combination of the sounding box or cover with an electric telephone. This cover is shown in the drawing as covering up that side of the diaphragm which is nearest to the magnet. I have already described what I suppose to be the use of this cover, namely, to protect the diaphragm. In Exhibits 7 and 8 this cover is made apparently of hard vulcanized rubber or vulcanite, and in Exhibit 6 the cover or box is the wooden box in which the diaphragm and magnets are located when the apparatus is set up for use. Such being the construction of Exhibits 6, 7 and 8, it is my opinion that they contain the invention referred to in the sixth claim of the Bell patent, Exhibit No. 2.

The seventh claim is to the combination of an electric telephone with a speaking or hearing tube for conveying sounds to and from the telephone. The description of the speaking tube is very meagre in the patent, but from the words "convey sound to and from the telephone," found in the claim, and from the words found in the patent itself, "E represents a speaking tube by which sounds may be conveyed to and from the plate A," and also on considering the drawings which show a small chamber in front of the diaphragm or

2857

plate A, which chamber is absolutely essential in order that the tubular part of the contrivance may convey the sound waves to the diaphragm, it seems to me that the tube E really means the tubular orifice through which the sound waves are sent, in connection with the chamber at the end of that orifice where the sound waves act upon the diaphragm. If I be right in this opinion as to what combination is referred to in the claim, all the exhibits, 6, 7 and 8, contain the invention referred to in that claim, because all of them have a chamber extending over the front side of the diaphragm, into which the sound waves are transmitted through a tubular orifice, as will be apparent on removing the parts which compose the chamber from the diaphragm or the diaphragm from the chamber which encloses the diaphragm in front. If the Court shall consider that the words "tube E" refer only to the tubular pipe which conveys the sound waves either from the mouth to the chamber, or to the ear from the chamber, then I would find the combination described in the patent only in Exhibit 6.

As I understand the eighth claim of the patent, it relates to the combination of the iron or steel diaphragm with a permanent magnet and coils of wire surrounding the magnet when those coils or helices are upon the ends of those magnets, as represented in the drawings, instead of covering a great part of the body of the magnet as is usual. Now, in all three exhibits, 6, 7 and 8, there is an iron diaphragm, a permanent magnet, and a coil upon the end or ends of the magnet nearest the diaphragm. And when I say this I understand that these exhibits have the coils around what are commonly called pole pieces instead of around the ends of the magnets themselves. And I also understand that the patentee describes as one modification of the magnet a permanent magnet, to the poles of which are affixed pole pieces of soft iron surrounded by helices of insulated wire. The eighth claim, as I understand it, therefore, refers either to a magnet one or both ends of which are surrounded by a coil, or to a magnet having a pole piece or pole pieces surrounded by a coil upon the end or ends of said magnet nearest the iron diaphragm. In Exhibit 8 there is really a compound magnet formed of six permanent magnets, and at the ends of these magnets, opposite the centre of the diaphragm, there is a cylindrical pole piece, which is surrounded by

2808

a wire helix. In Exhibit 7 there is a permanent magnet, shaped so as to work in some measure as a compound magnet, with two pole pieces, each surrounded by a helix, and each opposite to one of the diaphragms of that exhibit. In Exhibit 6 there is a permanent magnet, shaped something like a capital C, with two pole pieces, each surrounded by a wire helix, and each of these pole pieces is opposite the centre of one of the diaphragms of Exhibit 6. In my opinion, all the exhibits, 6, 7 and 8, contain the invention referred to in the eighth claim of the Bell patent, Exhibit No. 2.

Int. 10. Do you understand that by virtue of the permanent magnet the coils in the defendant's telephones can be used for transmitting vocal sounds without a battery upon the circuit?

Ans. I do.

Int. 11. Does Exhibit 6 embrace any other mechanism besides what you have referred to in your previous answers? If so, will you state generally what it is, and whether it forms any part of the speaking telephone itself?

Ans. It does embrace other mechanism, which does not form any part of the speaking telephone itself, but which serves to send calls by a bell from one station to another.

[*The plaintiff's counsel will not in this suit assert infringement by the use of the defendant's instruments produced in evidence under any other claims than those mentioned in the preceding direct examination.*]

[*Adjourned.*]

BOSTON, Jan. 27, 1879.

Cross Examination by CAUSTEN BROWNE, Esq., *of Counsel for Defendant.*

Cross-Int. 12. The apparatus referred to in the fifth claim of the Bell patent, Exhibit 1, is said to be for the purpose of transmitting sounds telegraphically by causing electrical undulations upon the line wire. In the body of the specification Mr. Bell says that such electrical undulations may be caused by increasing or diminishing either the power of the battery or the resistance of the circuit. Elsewhere in the same specification he says this: "In a pending application for Letters Patent, filed in the United States Patent Office, Feb. 25, 1875, I have described two ways of producing

2809

the intermittent current, — the one by actual make and break of contact, the other by alternately increasing and diminishing the intensity of the current without actually breaking the circuit. The current produced by the latter method I shall term for distinction's sake a pulsatory current." And he proceeds to say, "My present invention consists in the employment of a vibratory or undulatory current of electricity in contradistinction to a nearly intermittent or pulsatory current, and of a method of and apparatus for producing electrical undulations upon the line wire." Please examine the certified copy now handed to you of the pending application of Mr. Bell, above referred to by him, and state whether you find described there any and what way of "alternately increasing and diminishing the intensity of the current without actually breaking the circuit."

[*The certified copy referred to in the question is put in evidence, and marked "Defendant's Exhibit A, W. P. Preble, Jr., Examiner."*]

[*Objected to as referring to matter not opened in the direct examination.*]

Ans. The applicant says in this paper, which I have now seen for the first time, that this "result may be attained by alternately increasing and diminishing the intensity without absolute break in the continuity of the current," but he does not describe any apparatus or contrivance which will thus increase or diminish the intensity of the current without breaking the circuit.

Cross-Int. 13. Will the intensity of the current be alternately increased and diminished, without actual break of the circuit, by alternately increasing and diminishing the amount of battery power acting on the line wire?

[*Same objection.*]

Ans. It will.

Cross-Int. 14. When a cylinder, upon which are arranged bar magnets, is made to rotate in front of the pole of an electro-magnet, is the intensity of the current alternately increased and diminished?

Ans. There will be differences in the current produced by such rotation. Whether they will be differences in the intensity of the current or the volume or power of the current, I am unable to say.

Cross-Int. 15. What is the difference between the intensity of

2810

the current and the volume or power of the current, and will you state why you are unable to say of which sort will be the differences in the current produced by such rotation?

Ans. I am not able to state with accuracy what the differences are between volume and power and intensity, and I am unable to say because I do not know of which sort will be the differences in the current produced by such rotation.

Cross-Int. 16. Is your inability to answer more positively due to the intrinsic difficulty or obscurity of the subject itself, as recognized by scientific persons, or is it due to the imperfection of your own knowledge of such matters?

Ans. Partly to the first cause and chiefly to the second, because I have forgotten what I knew about the subject, and have not had occasion lately to renew my acquaintance with it.

Cross-Int. 17. Mr. Bell says in his pat nt Exhibit 1, that if a cylinder, upon which are arranged bar magnets, is made to rotate in front of the pole of an electro-magnet, an undulatory current of electricity is induced in the coils of the electro-magnet. Will not a pulsatory current of electricity be induced in the coils of the electro-magnet, according to your understanding of what a pulsatory current is and what an undulatory current is?

Ans. The only understanding that I have of the meaning of the words "pulsatory" and "undulatory" in this case is from Mr. Bell's own words in his patent. As I understand him, both pulsatory and undulatory currents, as he defines them, are variations in currents when the current is never broken, that is, as distinguished from an intermittent current made by alternately making and breaking the circuit. And Mr. Bell draws a distinction between undulatory and pulsatory currents. As I understand his distinction, the pulsatory is caused by sudden changes of intensity, and the undulatory by gradual changes of intensity, analogous to changes in the density of the air occasioned by simple pendulous vibrations. I should think that what he calls a pulsatory current could be induced in the coils of an electro-magnet, when a cylinder, upon which are arranged bar magnets, is made to rotate in front of its pole.

Cross-Int. 18. Do you believe there is any practical difference between pulsatory currents, so called, and undulatory currents, so called?

2811

Ans. I do not. I say this because I am not able to define where one would begin and the other would end, although there may be results produced by comparatively slow undulation which could not be produced by rapid pulsation.

Cross-Int. 19. For the purpose of any operation described in this patent, do you believe there is any practical difference?

Ans. As I said before, I am not able to define where one begins and the other ends, and therefore I cannot say there would be any practical difference, although I can conceive that different effects might be produced by currents which change their intensity rapidly and by those which change their intensity slowly.

Cross-Int. 20. Do you believe that any such different effects are produced for the purpose of any operation described in the patent?

Ans. No, I don't. All that I do know is, that the changes of current produced by the vibration of one armature in front of its magnet will produce corresponding though smaller vibrations of the other armature in front of its magnet, the attractive force of the magnet at the far end being varied.

Cross-Int. 21. Do you believe it to be true that so long as the circuit is not broken, a much larger number of signals can be transmitted simultaneously on the same circuit when an undulatory current is employed, than when a pulsatory or intermittent one is employed?

Ans. I have no belief whatever on the subject, as I have never seen any experiments tried.

Cross-Int. 22. In the absence of experiments, and from your knowledge of the science and practice of electro-magnetism, what is your belief about it?

Ans. I say that I have no belief, but as far as I can judge, I don't think that a much larger number of signals could be transmitted by one kind of current than the other.

Cross-Int. 23. In transmitting speech, is anything required to be reproduced except the pitch and the loudness of spoken sounds?

Ans. As I understand it, yes. The pitch is immaterial and the loudness is immaterial so long as the sound can be heard. The thing to be reproduced is the articulation, whatever quality that may be, in the sound wave.

Cross-Int. 24. Is an instrument which is, by its vibrations, capa-

2912

ble of transmitting or receiving but a single note, capable of transmitting or receiving articulate speech?

Ans. I should say not, but I don't know. I have read a great many theories on the subject and seen the records of many experiments and diagrams of the sound waves produced by articulate speech, and after reading them I am unable to say, but I should think not.

Cross-Int. 25. Why should *you* think not?

Ans. Because I think that an instrument capable of receiving "but a single note" could not transmit or receive articulate speech.

Cross-Int. 26. Why not? What is required for the transmission of articulate speech which will not be done by an instrument capable of transmitting or receiving but a single note?

Ans. As I understand it, an instrument which will not receive or transmit but a single note is an instrument which *must* vibrate a certain number of times a second, and with a certain rate of speed during each vibration. Now, most men speaking use different notes, and my idea, although it may be an incorrect one, is that articulation depends somewhat upon changes of speed of vibration during each vibration.

Cross-Int. 27. When the membrane referred to in the patent, Exhibit 1, of Prof. Bell, is set in motion by articulate speech directed against it, does it vibrate throughout at a definite rate, or does it vibrate in different parts at different rates?

Ans. I don't know.

Cross-Int. 28. What do you think about it?

Ans. I have not thought upon the subject. [It sufficed for me to know that the membrane at the other end so vibrated as to transmit the articulation to the ear of the listener.] [*Passage in brackets objected to as irresponsive.*]

Cross-Int. 29. I have not asked you in regard to any real or supposed facts submitted to your observation by anybody. I will ask you now to think upon the subject as you say you have not yet done, and say whether or not, in your opinion, the membrane, when set in motion by articulate speech directed against it, vibrates throughout at one and the same definite rate or vibrates in different parts at different rates.

Ans. If the word "rate" refers to the amplitude of the vibration

2813

in the same time, I should think that different parts of the diaphragm vibrated at different rates. If it refers to the rate per second of the vibration in different parts of the diaphragm, so that the surface thereof becomes undulatory, like the surface of the waves in water, I am unable, after thinking, to answer the question.

Cross-Int. 30. What is the shape of the membrane *a* mentioned in the Bell patent, upon which the sound vibrations converge by the operation of the cone A?

Ans. The acting part of it is circular, like the membrane of a drum or tambourine.

Cross-Int. 31. I use the word "rate" in the twenty-ninth question in the sense in which Mr. Bell uses it in his specification, and distinguish it from "amplitude" as he there distinguishes it, "rate" meaning the "rate per second of vibration." My question is whether or not all the filaments, which together constitute the stretched membrane, however different their length and tension, vibrate each and all at the same rate, or does the rate of each vary according to the tension?

Ans. I don't know. And I don't know that the diaphragm can be considered as made up of any particular arrangement of filaments.

Cross-Int. 32. I have drawn upon the deposition paper a circle representing that described by the circumference of the stretched membrane, and have drawn across a part of it parallel straight lines

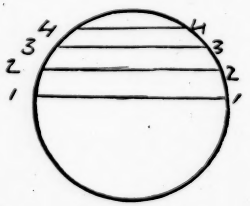

marked 1, 2, 3, and 4. Do you think that that part or section of the membrane which lies in the long line from 1 to 1 vibrates at the same rate per second as does that part which lies in the short line from 4 to 4 when articulate speech is uttered in the cone A?

Ans. I don't know, and I am by no means certain that the diaphragm works as if it was practically divided up into different

2814

strings arranged in the way shown in the diagram. My impression is that a diaphragm vibrates from the circumference to the centre and *vice versa*.

Cross-Int. 33. Assuming that that impression is correct, that a diaphragm vibrates from the circumference to the centre and *vice versa*, are you still unable to say whether or not the membrane, when set in motion by articulate speech directed against it, vibrates throughout at a different rate in different parts?

Ans. I am.

Cross-Int. 34. If an armature vibrating at a definite rate is attached at its vibrating end to a membrane which vibrates at a rate different from that of the armature, will the armature and the membrane continue to vibrate each at its own rate?

Ans. I don't understand the question.

Cross-Int. 35. What do you not understand about it?

Ans. I don't understand how an armature vibrating at a definite rate can be attached to a point of a diaphragm which vibrates at a different rate and the attachment continue.

Cross-Int. 36. Does the drawing Fig. 7, of the Bell patent No. 1, show the armature attached at its vibrating end to the membrane?

Ans. It does. At or near its vibrating end.

Cross-Int. 37. If the armature have a certain rate of vibration and the membrane have a rate of vibration different from that, will the attachment not continue?

Ans. It will not continue if the vibration at the centre of the membrane, at the point of attachment, be different from that of the armature. The other parts of the membrane might vibrate at different rates and the attachment still continue.

Cross-Int. 38. If the attachment *does* continue, what will be the effect upon the armature vibration and the diaphragm vibration?

Ans. The armature will move with the central point of the membrane.

Cross-Int. 39. And at its own rate of vibration?

Ans. At whatever rate of vibration it may be put into by the voice, whatever that rate may be.

Cross-Int. 40. I am speaking of an armature which, when vibrated, produces by its own rule or rate of vibration but a single note or

2815

tone. Now, if the rate of vibration of this armature be different from the rate of vibration of the membrane at its centre, where the armature is attached to it, and if the attachment continue, will the armature vibrate at its own rate?

Ans. I understood you entirely differently, because Bell's patent nowhere speaks of the attachment of such an armature to a diaphragm, but on the contrary describes and represents an armature loosely attached or hinged at one end and attached at the other end to the centre of the diaphragm, so that it has not the properties of a reed or a tuning fork but may be vibrated at any speed, and acts as if it were a piece of metal without any spring in it. I have answered the former questions on the supposition that when you spoke of an armature as attached to a diaphragm, you spoke of it as Mr. Bell speaks of an armature attached to a diaphragm and not a different armature. I don't know that a diaphragm has any definite rate of vibration, as a tuning fork has. In fact, I believe the contrary, and therefore cannot make the supposition of the question, which I understand supposes a diaphragm having only one rate of vibration, like a tuning fork. How a diaphragm would operate, when its centre was fastened to one end of a spring, the other end of which was secured fast, and which would vibrate only at one rate of speed, I don't know.

Cross-Int. 41 (*de bene esse*). You added to your answer to the twenty-eighth cross-interrogatory, "It sufficed for me to know that the membrane at the other end so vibrated as to transmit the articulation to the ear of the listener." I suppose you speak here of some trial you have witnessed or made. Do you?

[*Objected to on the ground that it is matter not opened in the direct examination, and if the counsel for the defendant sees fit to interrogate the witness on that subject, he must treat him as his own witness.*]

Ans. I refer to some trial that I have both made and witnessed.

[*The counsel for the defendant asks the counsel for the complainant whether he yields to the objection to the witness's statement put in brackets as part of the answer to the twenty-eighth question and will have that passage struck out, or whether he insists that it shall stand as part of the record.*

The counsel for the complainant says the counsel for the defendant may do as he pleases.

2816

The counsel for the defendant inquires whether that means that the passage in question is to be struck out if he pleases.

The counsel for the complainant says that he did not bring the matter inquired of into the record, and does not propose to take any responsibility about its remaining there.

The counsel for the defendant asks if that is the only answer intended to be given to his question.

That is the answer of the counsel for the complainant]

Cross-Int. 42 (*de bene*). When was this trial made or witnessed?

[*Same objection.*]

Ans. On the twenty-second and twenty-third days of this January.

Cross-Int. 43 (*de bene*). Where?

[*Same objection.*]

Ans. With one end of the line in this office and with the other end in a basement room in the rear extension of the same building.

Cross-Int. 44 (*de bene*). Where is the apparatus with which that experiment was tried?

[*Same objection.*]

Ans. I don't know except the line wire, and that is still in place.

Cross-Int. 45 (*de bene*). Do you know what was done with the apparatus after the trial was finished?

[*Same objection.*]

Ans. I don't know of my own knowledge. I saw the receivers and transmitters in this office on Friday last.

Cross-Int. 46 (*de bene*). Did you see or try more than one receiver or more than one transmitter?

[*Same objection.*]

Ans. I did. Three receivers and three transmitters.

Cross-Int. 47 (*de bene*). And did you see all three of each, here last Friday?

[*Same objection.*]

Ans. I can't be certain on that point. I remember having seen some of them and may have seen all of them.

Cross-Int. 48 (*de bene*). When you last saw them were they in the possession or custody of the counsel for complainant?

[*Same objection.*]

Ans. They were in the counsel's office.

2817

Cross-Int. 49 (*de bene*). In whose custody?

[*Same objection.*]

Ans. I don't know, they were laying around.

[*Counsel for the defendant calls upon the counsel for the complainant to produce the receivers and transmitters mentioned by the witness for inspection and cross examination, or else to consent to the striking out of the passage bracketed as in answer to the twenty-eighth cross-interrogatory.*

The counsel for complainant states that he proposes at the proper time in his judgment to produce the instruments in evidence, and that the counsel for the defendant will then have ample opportunity to inspect them and to cross-examine the witnesses called to testify in relation to them, but that he declines to produce them and allow the counsel for the defendant to inspect them and examine the witness de bene *upon them, and that he has no further answer to make in regard to the matter called out in cross examination in answer to the twenty-eighth cross-interrogatory included in brackets.*

The counsel for the defendant inquires whether, when the instruments are so produced, the opportunity will be given him of cross-examining Mr. Renwick in relation thereto.

The counsel for the complainant states that if he examines Mr. Renwick as a witness upon them, as he presumes he shall, the counsel for the defendant will then have an opportunity to cross-examine.

The counsel for the defendant gives notice that he shall object to the introduction in evidence of the instruments in question, unless Mr. Renwick is recalled for cross examination upon them, and shall object to their introduction at all in rebuttal of evidence to be introduced in the defence.]

Cross-Int. 50 (*de bene*). Were these several receivers and several transmitters respectively alike in the details of their construction?

[*Same objection.*]

Ans. No, not exactly.

Cross-Int. 51. Have you ever had occasion to examine a copy of the caveat filed Feb. 14, 1876, by Mr. Elisha Gray, describing certain improvements in the art of transmitting vocal sounds telegraphically?

[*Same objection.*]

Ans. I have seen what purported to be an account of it in a a book; of Prescott's, I think.

Cross-Int. 52. I hand you now a copy of it with the proceedings at the Patent Office in regard to it [*the copy put in evidence marked "Defendant's Exhibit B, W. P. Preble, Jr., Examiner"*], and ask you to read it, and say whether or not, in your opinion, it describes and represents a practical apparatus for the telephonic transmission of articulate speech.

[*Same objection.*]

Ans. I have never tried the apparatus described in this caveat, and therefore cannot speak with any positiveness as to whether it would or not transmit articulate speech, if constructed in accordance with the description and drawings. I should think it would not.

Cross-Int. 53. Why should you think it would not?

[*Same objection.*]

Ans. Because of the shape or form of the receiving vocalizing chamber *C* in the drawings and *c* in the description.

Cross-Int. 54. Any other reason?

[*Same objection.*]

Ans. No other reason if the apparatus be made in one of the ways described, with a conductor *b*, forming part of the circuit entering into the bottom of the vessel *B*.

Cross-Int. 55. What is it about the shape of the receiving vocalizing chamber which you think would prevent the apparatus from transmitting articulate speech?

[*Same objection.*]

Ans. Its large, egg-shaped cavity. I think that the various reflections of the sound waves in that cavity would tend to impair or destroy the articulation before it got to the ear of the listener.

Cross-Int. 56. You say in your answer to the fourth direct interrogatory, after describing the apparatus which you understand to be referred to in the fifth claim of the Bell patent No 1, "It is stated in the patent *in substance* as the result of this apparatus, that the motions of the armature at the transmitting end, due to the action of the human voice on the diaphragm, are copied by the

2819

armature at the receiving end, and consequently by the diaphragm attached to it, so that a sound similar to that uttered in the transmitting end is heard to proceed from the diaphragm at the receiving end." I wish you would quote from the patent the language which in your judgment states this in substance.

Ans. "Another mode is shown in Fig. 7, whereby motion can be imparted to the armature by the human voice." "A cone, A, is used to converge sound vibrations upon the membrane. When a sound is uttered in the cone, the membrane *a* is set in vibration, the armature *c* is forced to partake of the motion, and thus electrical undulations are created upon the circuit E, *b*, *e*, *f*, *g*. These undulations are similar in form to the air vibrations caused by the sound, that is, they are represented graphically by similar curves. The undulatory current passing through the electro-magnet *f* influences its armature *h* to copy the motion of the armature *c*. A similar sound to that uttered into A is then heard to proceed from *L*."

[*Adjourned*]

BOSTON, Jan. 28, 1879.

Cross-Int. 57. In your answer to the fourth interrogatory, after describing what you consider to be the apparatus referred to in the fifth claim of the Bell patent No. 1, and after describing what you understand to be its operation you say it follows from this "that if a word be spoken in front of the transmitting diaphragm, that diaphragm will be set into vibration resulting from such enunciation of the word, that the receiving diaphragm will copy these vibrations, and that the word will be heard by a person having his ear at the diaphragm of the receiving apparatus." I should understand from this that you believe that an apparatus constructed as described and represented in the patent, and used in the manner there described, will transmit continuous articulate speech with practical success. Do you intend to be so understood?

Ans. The words quoted follow a sentence in which are these words: "It is stated in the patent in substance, etc." And the words quoted were a further description, or rather a description in different words, of the same effects that are stated in the patent, in substance, to be produced by the apparatus. As I understand the patent it states that continuous articulate speech will be produced

2820

by the apparatus, and I did know at that time, although I did not state it in my direct examination, that the apparatus described in the patent would, with practical success, which are the words of the question, transmit continuous articulate speech.

Cross-Int. 58. Then you answer my last question in the affirmative, do you not?

Ans. No. The language which you quoted was not intended to convey the idea that I had tried the apparatus practically. I did believe that it would transmit articulate speech continuously before the experiment was tried.

Cross-Int. 59. I think it cannot be doubted that I did not ask you whether you had tried the apparatus practically, or whether you meant to be understood that you had. I asked you whether, by the language which I quoted, you meant to be understood that you believed that an apparatus, constructed as described and represented in the patent and used in the manner there described, would transmit continuous articulate speech with practical success. What I want to find out is what you intended to convey to us by a certain answer. And I will now ask you to read the whole of your answer to the fourth question, and say whether you meant by that answer to say that you so believed.

Ans. I meant in that answer to describe the machine which was described in the patent, and to state the results which the patent states would flow from that machine. I did not mean by the answer to state any belief on the subject (although I had that belief). I meant merely to state what I derived from the patent itself.

Cross-Int. 60. Now please state whether you now believe (as I suppose from expressions you have used that you do) that an apparatus, constructed exactly in accordance with the description and drawings of the patent and used exactly as there directed, will transmit (by which I mean send from one end and deliver at the other) continuous articulate speech with practical success?

Ans. I do.

Cross-Int. 61. Do you have this belief as matter of deduction from what the patent tells you and shows you, or do you have it from any ocular or auricular demonstration?

Ans. I had the belief from what the patent told me, and from

2821

what I knew of practical telephones and from what I had read of them, and that belief became a certainty after I had seen the apparatus, seen it used, and used it myself.

Cross-Int. 62. Do you mean apparatus which you saw, saw used and used last week in this office?

Ans. Yes.

Cross-Int. 63. Do you suppose that apparatus to be still in this office?

Ans. I have no reason for any supposition; rather the contrary, the last remark being made with reference to all parts of the apparatus.

Cross-Int. 64. When did you last see the apparatus, and where?

Ans. I saw some, perhaps all, of the contrivances on Friday last. I have not seen any of the parts since except the line wire.

Cross-Int. 65. You say in substance that you have some reason for supposing that not all parts of the apparatus are here in the office. What parts do you suppose to be elsewhere, and where do you suppose them to be?

Ans. I did not state that I supposed them to be elsewhere. I have no supposition, as I before stated, where they now are. I did direct on Thursday evening, I think, two of the parts of the apparatus, I forget now whether receivers or transmitters, to be taken to the work shop of Charles Williams, Jr., in Court Street.

Cross-Int. 66. What is his business?

Ans. I should suppose, from what I saw in the shop, making magnetic and telegraphic apparatus generally.

Cross-Int. 67. Including telephones?

Ans. That I don't know. I saw no parts of telephones in process of construction.

Cross-Int. 68. Nor any completed ones, I suppose?

Ans. Yes, I did. I saw I don't know how many, four or five I should think, hung up on the wall of the office connected ready for use. Through one of them we talked to this office.

Cross-Int. 69. This office where we now are is the office of the leading counsel for the complainant, is it not?

Ans. It is.

[*The counsel for the defendant requests the counsel for the complain-*

2822

ant to produce the apparatus referred to by the witness as the apparatus which he saw used, and used himself last week in order that it may be inspected, and the witness cross-examined upon it, in order to test the judgment which he has expressed in his direct examination as to the practical operation of that which the patent describes and represents.

The counsel for the complainant makes the same answer that he did yesterday to a similar request, and adds that he does not understand that the witness in his direct examination expressed any opinion upon the practical success of the instruments described in the patent except from what he found in the patent itself.

The counsel for the defendant withdraws his objection to the bracketed part of the answer to the twenty-eighth interrogatory as irresponsive and repeats the above request.

The counsel for the complainant makes the same answer as before.

The counsel for the defendant gives notice that unless the apparatus is produced for the purpose of cross examination of this witness as above requested, he will move to suppress the deposition, and not waiving the right so to do, proceeds with the present cross examination as de bene esse.

The counsel for the complainant states that he did not examine the witness upon the apparatus which has been inquired about, and that in his judgment the counsel for the defendant has no right to cross-examine the witness upon them or to examine him at all upon them except as his own witness.]

Cross-Int. 70. Have you had occasion to examine a pamphlet entitled "The Telephone. A lecture entitled Researches in Electrical Telephony by Professor Alexander Graham Bell, delivered before the Society of Telegraph Engineers, Oct. 31st, 1877. Published by the Society, and Edited by Lieut.-Col. Frank Bolton, C. E., Hon. Secretary, and William Edward Langdon, Acting Secretary. London: E. and F. N. Spon, 46 Charing Cross. New York: 446 Broome Street. 1878"?

[*Objected to.*]

Ans. No, but on looking over it I see that I have seen some

2823

of the drawings in it, and also some of the language, in other places, — books and patents.

Cross-Int. 71. Have you read or looked over the book entitled "The Speaking Telephone, Talking Phonograph, and other Novelties by George B. Prescott," Chapter 2, which purports to give in full a lecture delivered by Prof. Bell, Oct. 31, 1877, before the society of Telegraph Engineers?

Ans. I have looked over Prescott's book, reading parts of it, and do not think that I have read the whole of Chapter 2d. I do remember reading or having read to me that part of it which relates to curious phenomena observed in the use of telephones on the seventy-ninth, eightieth and part of the eighty-first pages. I also remember having read, either in this book or somewhere else, the statement in the last paragraph of the eighty-second page. And I have read in this book, or somewhere else, what is contained in the sixty-eighth, sixty-ninth and part of the seventieth page, and perhaps further.

Cross-Int. 72. Referring now to the third claim of the Bell patent No. 2, I will ask you whether you understand that the functions of a metallic diaphragm in combination with an electro-magnet are in all respects the same whether it be vibrated by the movement of the surrounding air as when it is used as a transmitter or whether it be used in combination with the electro-magnet at the receiving end of the line?

Ans. No. The functions of the diaphragm at the transmitting end are: to be vibrated by the sound waves and to cause undulatory currents of electricity in the line wire by reason of such diaphragm being vibrated in front of the magnet. The functions of the diaphragm at the receiving end are: to be vibrated by the varying attractive force of the magnet and by its vibrations to put the air in motion, thus conveying sounds to the ear. When the message is sent the other way, the receiving diaphragm becomes the transmitting one and performs its functions and *vice versa*. And in their changed position each diaphragm, although the same diaphragm, performs the duties which were at first performed by the other.

Cross-Int. 73. Do you understand that for the purposes of the receiving end of the line, and when used only for receiving, the

diaphragm may be made of a material which is not capable of inductive action?

Ans. The patent states that the instruments are to be such that the same instrument can be used both for a receiving and transmitting instrument, and therefore both diaphragms would have to be not only capable of inductive action but of being attracted by the magnet. Now, speaking generally, if an instrument is to be used as a receiving instrument only, the diaphragm must be made of a material which will be attracted itself by a magnet or must have attached to it some material which will be attracted by a magnet.

Cross-Int. 74. Do you feel sure of this last?

Ans. That is my opinion. I had never seen a telephone with any material in it which would not be attracted by a magnet at the receiving end.

Cross-Int. 75. Are you aware that articulate sounds uttered at the transmitting end of a telephone may be heard at the receiving end by applying the ear directly to the electro-magnet at that end and without any diaphragm whatever at that end?

Ans. I am not aware of the fact myself. I have seen that statement, or something like it, made in some book.

Cross-Int. 76. Have you any opinion of your own as to whether it be a fact, or not?

Ans. I have not. Judging from some experiments on a phonograph, I am induced to believe that the sounds heard in all telephones are produced by the diaphragm.

Cross-Int. 77. Will you please state a little more fully the nature of those experiments and the demonstration which they afforded?

Ans. The experiments consisted merely in examining the construction of a phonograph, in talking to it, and hearing it talked to, and then having the phonograph repeat what had been said to it, and in an examination with a very weak magnifier of the marks made in the tin foil by the style of the diaphragm of the phonograph. In that instrument there is no battery, no coil of wire, no line wire and no magnet, and there is a steel style or needle attached to the centre of the diaphragm, which, when the instrument is at rest, is in contact with a piece of tin foil, wound upon a cylinder, which

has both a revolving and an endwise movement at the same time. The diaphragm is like the diaphragm of an ordinary telephone, and when the diaphragm is thrown into vibration by the sound waves the end of the style furthest from the diaphragm makes wave-like impressions upon the moving sheet of tin foil. After a sentence has been repeated to the diaphragm, it, with the style, is thrown backwards upon a hinge upon which it is mounted, and the cylinder of tin foil is shoved back longitudinally and moved angularly until a plain part of the tin foil is opposite the end of the style. The diaphragm with its style is then thrown forward so that the style again rests upon the tin foil, and the cylinder is both rotated and moved endwise as before. When the point of the style reaches the impressions that have been made by it, or rather when these wave-like impressions arrive under the point of the style, the style and consequently the diaphragm are by the movement of the tin foil thrown into vibration, and when the diaphragm is thus vibrated it repeats the sentence which had been spoken into it in the first place. The voice, if it may be so termed, proceeding from the diaphragm is like the voice proceeding from the diaphragm of the telephone, so far as my ear could judge, and the experiments demonstrated to me that the utterance heard at the receiving end of an ordinary telephone comes from the diaphragm, or in other words, that the vibrations of that diaphragm are the causes of the sound that reaches the ear, and therefore that the sound heard from an ordinary telephone comes from the diaphragm and not from the coil or magnet, because there is no coil or magnet in the phonograph.

Cross-Int. 78. Did you ever try the experiment of listening at the magnet of the receiving end of the telephone unprovided with any diaphragm at that end, to see whether the sounds uttered in the transmitting end issued from the magnet at the receiving end, although faintly?

Ans. No.

Cross-Int. 79. Is the vibration of the inducing diaphragm, at the transmitting end, an agent in the creation of the sound transmitted?

Ans. I should say no, but I will explain what I mean. The created sound is the sound that is heard at the receiving end. This

sound, as I understand it, comes from or is created by the receiving diaphragm. The sound uttered at the transmitting end does not go to the receiving end.

Cross-Int. 80. The plate of iron or steel mentioned in the third claim of the Bell patent No. 2 is the plate A of the drawings, is it not?

Ans. It is.

Cross-Int. 81. In the specification of this patent, after a reference to what is shown in Figs. 4, 5, and 6, and perhaps others, it is said, "In lieu of the plate A in the above figures iron or steel reeds of definite pitch may be placed in front of the electro-magnet O" etc. As you understand the plate of iron and steel referred to in the third claim, may it be an iron or steel reed of definite pitch, and if not, will you refer to such passages of the specification as direct otherwise?

Ans. As I understand it, the words "plate A" in the third claim refer only to the diaphragm. I don't know that I can quote any particular passage except the claim itself which shows conclusively that this claim refers only to the diaphragm. But the specification as a whole conveys to me the idea that there are two things spoken of in the patent, one for transmitting musical tones and the other for transmitting articulate speech. And the third claim from its language, so far as I can see, refers to that form of the instrument without a reed which will transmit articulate speech by a diaphragm. The very sentence you quote from, after speaking of the reeds which may be placed in front of the magnet in lieu of the plate A, refers to the former patent, and to that part thereof which speaks of the employment of reeds only, by means of which signals can be transmitted by a system of dots and dashes represented either to the eye or the ear. And the words "in lieu of" convey to me the idea that the patentee distinguishes the reed from the diaphragm or plate A. I would say further that if the third claim includes the reeds it would be a claim to some of the apparatus shown in the former patent.

Cross-Int. 82. What is the language of the claim itself which you think, as I understand you, shows conclusively that the plate there mentioned is the diaphragm and only so?

Ans. The very particular and special words of the claim, "A plate of iron or steel" etc.; and the only plate spoken of in the patent or represented in the drawings is a diaphragm plate, represented in two of the drawings as fastened down upon a piece of wood having a round hole in it, so that the plate or diaphragm covers the hole.

Cross-Int. 83. Referring now to the sixth claim of the Bell patent No. 2, which is in these words, "the combination with an electric telephone, such as described, of a sounding box substantially as herein shown and set forth," will you refer to all those parts of the specification in which you find a sounding box or its construction or its office alluded to?

Ans. I quote from the patent: "A in said drawings represents a plate of iron or steel which is fastened at B and C, to the cover or sounding-box D." The drawings show a cubical sounding-box or cover containing a magnet, and with the diaphragm A covering a round hole in one end of the box. That's all that I see.

Cross-Int. 84. Have you ever tried the experiment of using the apparatus without any cover over the magnet, to see whether the apparatus did not work just as well without as with it?

Ans. I never did try the apparatus in that way.

Cross-Int. 85. Referring now to the seventh claim, which is "in combination with an electric telephone as herein described, the employment of a speaking or a hearing tube for conveying sounds to or from the telephone substantially as set forth," in which claim, as I understand you, you think that "tube" means not only tube but orifice, will you explain wherein you think the speaking or hearing tube mentioned in that claim differs from the speaking tube which makes part of the familiar Rice telephone produced in 1861 or earlier, and illustrated on page 148 of Prescott's work?

Ans. What I did say is as follows: "The tube E really means the tubular orifice through which the sound waves are sent, in connection with the chamber at the end of that orifice, where the sound waves act upon the diaphragm." I think that the whole cavity which in my opinion constitutes the tube E (I mean from the place where the lips are applied to the diaphragm) differs from that of Rice for this reason, namely, that the box of Rice is so great

2728

in capacity, and extends so far downwards below the diaphragm, that it will not act practically to concentrate the effect of the air undulations upon the face of the diaphragm. My opinion is (I may be entirely in error) that the narrow chamber in front of the diaphragm tends to increase the action of the sound waves upon the diaphragm, so that the diaphragm is thrown into vibrations of greater amplitude than would be the case if such contracted chamber were not present in front of the diaphragm.

Cross-Int. 86. Do you consider the chamber on the inside of the orifice, where the sound waves act upon the diaphragm, as an essential part or auxiliary of the speaking or hearing tube?

Ans. I do of the speaking or hearing tube described in the patent, though I said that perhaps the Court might take another view.

Cross-Int. 87. In your answer to the eighth interrogatory you say, "I do not understand that these particular forms of magnet are new by themselves; on the contrary I understand that they were old forms of magnets and differ in degree and not in kind from a magnet in which the coil extends over a greater portion of the magnet, whether the core be permanently or temporarily magnetic." What forms of magnet do you refer to when you use the words "these particular forms of magnets"?

Ans. I mean forms of magnets such as are shown in the Bell patent No. 2, the peculiarity not being in the shape of the bar of iron or steel, which is shown of different shapes, but the peculiarity of form being in the fact that the helix is wound only round the pole or poles of the magnets or pole pieces applied to the end of the magnet.

Cross-Int. 88. When you say that such forms of magnets "differ in degree only" etc., degree of *what* do you mean?

Ans. Degree of mode of construction and consequent operation.

Cross-Int. 89. Degree of *what* consequent operation?

Ans. To vary their attractive force under the operation of electric or galvanic currents.

Cross-Int. 90. How and why do they vary such attractive force even in degree?

Ans. I do not know. I saw the fact stated in the book to which I referred, that under the operation of a given current and with a given quantity of wire, the magnetic force would be greater if the

2829

helix were applied in the way described and shown in the Bell patent No. 2.

Cross-Int. 91. Do you know that that statement in that book is true?

Ans. No. I never tried any experiments to determine the truth of it.

Cross-Int. 92. What book was it?

Ans. "Traité theorique et pratique de Té'égraphie Électrique, par le Cte Th. Du Moncel. Paris, Gauthier-Villars, Imprimeur-Libraire. 1864."

[SEAL] HENRY B. RENWICK.

Attest: W. P. PREBLE, JR., *Examiner.*

[*The cross examination is closed without waiving the right to move to suppress the deposition as reserved at the end of the sixty-ninth interrogatory.*]

Attest: W. P. PREBLE, JR., *Examiner.*

BOSTON, Feb. 4, 1879.

The parties being present before me by their counsel as before, it is agreed that the following portions of the foregoing record of the deposition of Henry B. Renwick be considered as struck from the record, viz.:

The passage in brackets of the answer to the twenty-eighth interrogatory.

The cross interrogatories, 41st to 50th inclusive, with the answers thereto.

The passage in parentheses of the answer to cross interrogatory 59.

The cross interrogatories 60th to 69th inclusive, with the answers thereto.

W. P. PREBLE, JR.,
Examiner.

A. G. BELL.

TELEGRAPHY.

2830

No. 174,465. Patented March 7, 1876.

Fig. 1.

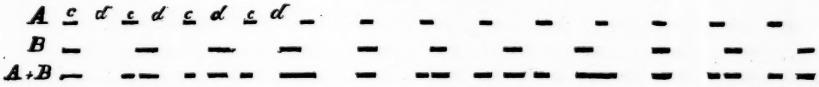

Fig. 2.

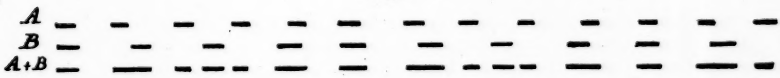

Fig. 3.

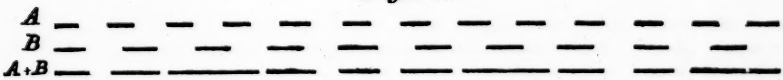

Fig. 4.

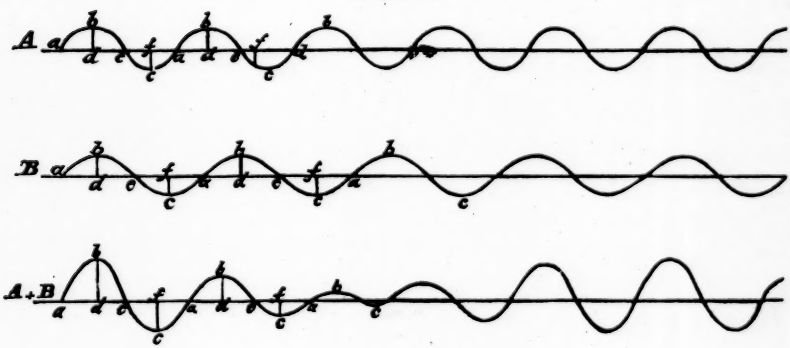

Fig. 5.

2829

helix were applied in the way described and shown in the Bell patent No. 2.

Cross-Int. 91. Do you know that that statement in that book is true?

Ans. No. I never tried any experiments to determine the truth of it.

Cross-Int. 92. What book was it?

Ans. "Traité theorique et pratique de Té'égraphie Électrique, par le Cte Th. Du Moncel. Paris, Gauthier-Villars, Imprimeur-Libraire. 1864."

[SEAL] HENRY B. RENWICK.

Attest: W. P. PREBLE, JR., *Examiner.*

[*The cross examination is closed without waiving the right to move to suppress the deposition as reserved at the end of the sixty-ninth interrogatory.*]

Attest: W. P. PREBLE, JR., *Examiner.*

BOSTON, Feb. 4, 1879.

The parties being present before me by their counsel as before, it is agreed that the following portions of the foregoing record of the deposition of Henry B. Renwick be considered as struck from the record, viz.:

The passage in brackets of the answer to the twenty-eighth interrogatory.

The cross interrogatories, 41st to 50th inclusive, with the answers thereto.

The passage in parentheses of the answer to cross interrogatory 59.

The cross interrogatories 60th to 69th inclusive, with the answers thereto.

W. P. PREBLE, JR.,
Examiner.

2 Sheets—Sheet 1.

A. G. BELL.

TELEGRAPHY.

2830

No. 174,465. Patented March 7, 1876.

Fig. 1.

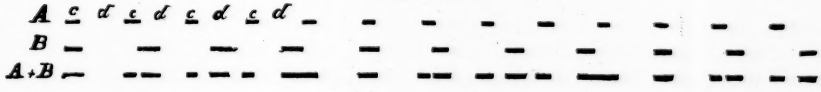

Fig. 2.

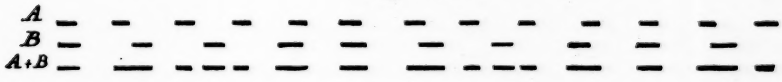

Fig. 3.

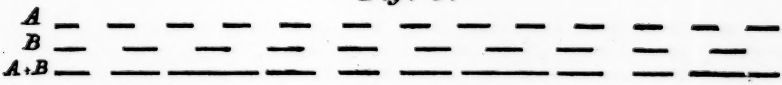

Fig. 4.

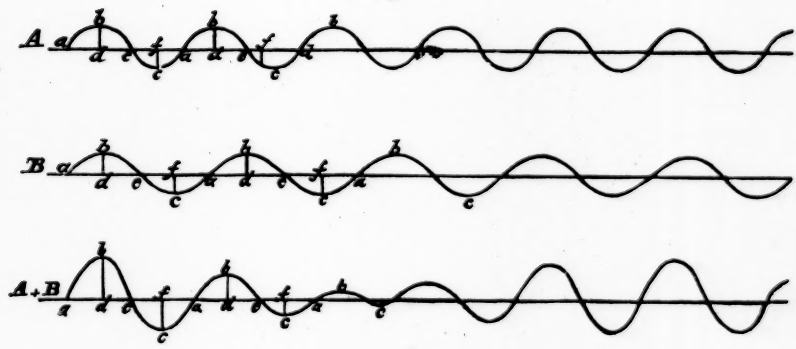

Fig. 5.

Witnesses:

Ewell Storck,

H. T. Hutchinson

Inventor:

A. Graham Bell

by attys. Pollock & Bailey

2 Sheets—Sheet 2.

2831

A. G. BELL.

TELEGRAPHY.

No. 174,465. Patented March 7, 1876.

Fig. 6.

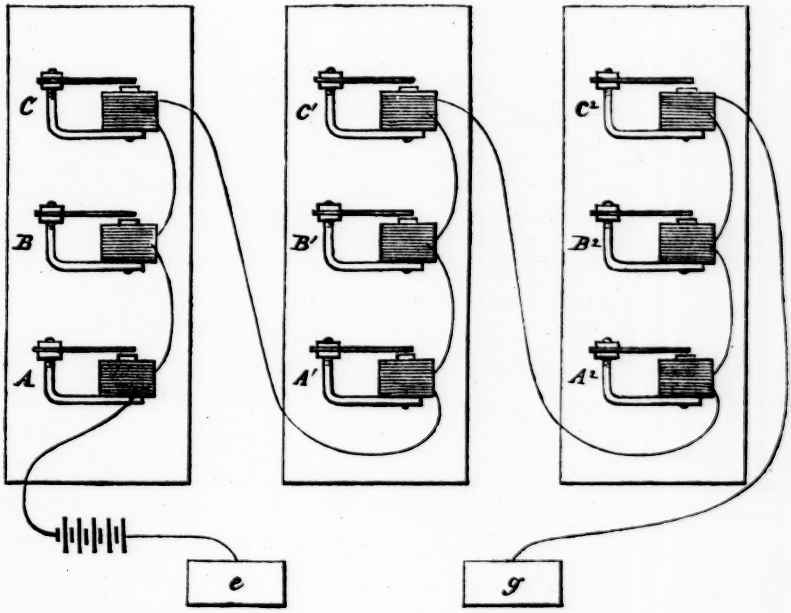

Fig. 7.

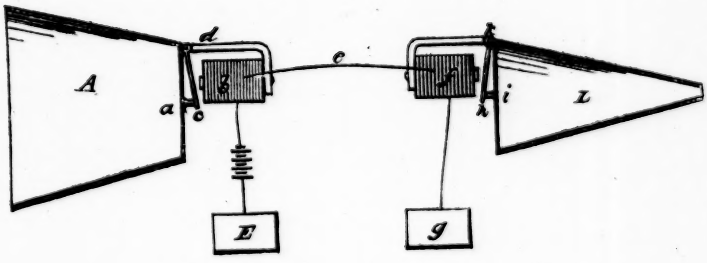

Witnesses:

Ewell & Dick,

H. T. Hutchinson

Inventor:

A. Graham Bell

by attys Pollok & Bailey

COMPLAINANT'S EXHIBIT 1, W. P. PREBLE, JR., EXAMINER.

UNITED STATES PATENT OFFICE.

ALEXANDER GRAHAM BELL, OF SALEM, MASSACHUSETTS.

IMPROVEMENT IN TELEGRAPHY.

Specification forming part of Letters Patent No. 174,465, dated March 7, 1876; application filed February 14, 1876.

To all whom it may concern:

Be it known that I, Alexander Graham Bell, of Salem, Massachusetts, have invented certain new and useful Improvements in Telegraphy, of which the following is a specification.

In Letters Patent granted to me April 6, 1875, No. 161,739, I have described a method of, and apparatus for transmitting two or more telegraphic signals simultaneously along a single wire by the employment of transmitting-instruments, each of which occasions a succession of electrical impulses differing in rate from the others; and of receiving-instruments, each tuned to a pitch at which it will be put in vibration to produce its fundamental note by one only of the transmitting-instruments; and of vibratory circuit-breakers operating to convert the vibratory movement of the receiving-instrument into a permanent make or break (as the case may be) of a local circuit, in which is placed a Morse sounder, register, or other telegraphic apparatus. I have also therein described a form of autograph-telegraph based upon the action of the above-mentioned instruments.

In illustration of my method of multiple telegraphy I have shown in the patent aforesaid, as one form of transmitting-instrument, an electro-magnet having a steel-spring armature, which is kept in vibration by the action of a local battery. This armature in vibrating makes and breaks the main circuit, producing an intermittent current upon the line-wire. I have found, however, that upon this plan the limit to the number of signals that can be sent simultaneously over the same wire is very speedily reached; for, when a

4733

nnmber of transmitting-instrumerts having different rates of vibration are simultaneously making and breaking the same circuit, the effect upon the main line is practically equivalent to one continuous current.

In a pending application for Letters Patent, filed in the United States Patent Office February 25, 1875, I have described two ways of producing the intermittent current — the one by actual make and break of contact, the other by alternately increasing and diminishing the intensity of the current without actually breaking the circuit. The current produced by the latter method I shall term, for distinction sake, a "pulsatory current."

My present invention consists in the employment of a vibratory or undulatory current of electricity in contradistinction to a merely intermittent or pulsatory current, and of a method of and apparatus for producing electrical undulations upon the line-wire.

The distinction between an undulatory and a pulsatory current will be understood by considering that electrical pulsations are caused by sudden or instantaneous changes of intensity, and that electrical undulations result from gradual changes of inten-ity exactly analogous to the changes in the density of air occasioned by simple pendulous vibrations. The electrical movement, like the aerial motion, can be represented by a sinusoidal curve or by the resultant of several sinusoidal curves.

Intermittent or pulsatory and undulatory currents may be of two kinds, accordingly as the successive impulses have all the same polarity or are alternately positive and negative.

The advantages I claim to derive from the use of an undulatory current in place of a merely intermittent one are, first, that a very much larger number of signals can be transmitted simultaneously on the same circuit; second, that a closed circuit and single main battery may be used; third, that communication in both directions is established without the necessity of special induction coils; fourth, that cable dispatches may be transmitted more rapidly than by means of an intermittent current or by the methods at present in use, for, as it is unnecessary to discharge the cable before a new signal can be made, the lagging of cable-signals is prevented; fifth, and that as the circuit is never broken a spark-arrester becomes unnecessary.

It has long been known that when a permanent magnet is caused to approach the pole of an electro-magnet a current of electricity is induced in the coils of the latter, and that when it is made to recede a current of opposite polarity to the first apppears upon the wire. When, therefore, a permanent magnet is caused to vibrate in front of the pole of an electro-magnet an undulatory current of electricity is induced in the coils of the electro-magnet, the undulations of which correspond, in rapidity of succession, to the vibrations of the magnet, in polarity to the direction of its motion, and in intensity to the amplitude of its vibration.

That the difference between an undulatory and an intermittent current may be more clearly understood, I shall describe the condition of the electrical current when the attempt is made to transmit two musical notes simultaneously — first upon the one plan, and then upon the other. Let the interval between the two sounds be a major third; then their rates of vibration are in the ratio of 4 to 5. Now, when the intermittent current is used, the circuit is made and broken four times by one transmitting-instrument in the same time that five makes and breaks are caused by the other. A and B, Figs. 1, 2, and 3, represent the intermittent currents produced, four impulses of B being made in the same time as five impulses of A. *c c c*, &c., show where and for how long time the circuit is made, and *d d d*, &c., indicate the duration of the breaks of the circuit. The line A and B shows the total effect upon the current when the transmitting-instruments for A and B are caused simultaneously to make and break the same circuit. The resultant effect depends very much upon the duration of the make relatively to the break. In Fig. 1 the ratio is as 1 to 4; in Fig. 2, as 1 to 2, and in Fig. 3 the makes and breaks are of equal duration. The combined effect A and B, Fig. 3, is very nearly equivalent to a continuous current.

When many transmitting-instruments of different rates of vibration are simultaneously making and breaking the same circuit the current upon the main line becomes for all practical purposes continuous.

Next, consider the effect when an undulatory current is employed. Electrical undulations, induced by the vibration of a body capable of inductive action, can be represented graphically, without error, by

2835

the same sinusoidal curve which expresses the vibration of the inducing body itself and the effect of its vibration upon the air; for, as above stated, the rate of oscillation in the electrical current corresponds to the rate of vibration of the inducing body — that is, to the pitch of the sound produced. The intensity of the current varies with the amplitude of the vibration — that is, with the loudness of the sound; and the polarity of the current corresponds to the direction of the vibrating body — that is, to the condensations and rarefactions of air produced by the vibration. Hence, the sinusoidal curve A or B, Fig. 4, represents graphically the electrical undulations induced in a circuit by the vibration of a body capable of inductive action.

The horizontal line *a d e f*, &c., represents the zero of current. The elevations *b b b*, &c., indicate impulses of positive electricity. The depressions *c c c*, &c., show impulses of negative electricity. The vertical distance *b d* or *c f* of any portion of the curve from the zero-line expresses the intensity of the positive or negative impulse at the part observed, and the horizontal distance *a a* indicates the duration of the electrical oscillation. The vibrations represented by the sinusoidal curves B and A, Fig. 4, are in the ratio aforesaid, of 4 to 5 — that is, four oscillations of B are made in the same time as five oscillations of A.

The combined effect of A and B, when induced simultaneously on the same circuit, is expressed by the curve A×B, Fig. 4, which is the algebraical sum of the sinusoidal curves A and B. This curve A×B also indicates the actual motion of the air when the two musical notes considered are sounded simultaneously. Thus, when electrical undulations of different rates are simultaneously induced in the same circuit, an effect is produced exactly analogous to that occasioned in the air by the vibration of the inducing bodies. Hence, the coexistence upon a telegraphic circuit of electrical vibrations of different pitch is manifested, not by the obliteration of the vibratory character of the current, but by peculiarities in the shapes of the electrical undulations, or, in other words, by peculiarities in the shapes of the curves which represent those undulations.

There are many ways of producing undulatory currents of electricity, dependent for effect upon the vibrations or motions of bodies

capable of inductive action. A few of the methods that may be employed I shall here specify. When a wire through which a continuous current of electricity is passing is caused to vibrate in the neighborhood of another wire, an undulatory current of electricity is induced in the latter. When a cylinder upon which are arranged bar-magnets is made to rotate in front of the pole of an electro-magnet, an undulatory current of electricity is induced in the coils of the electro-magnet.

Undulations are caused in a continuous voltaic current by the vibration or motion of bodies capable of inductive action, or by the vibration of the conducting-wire itself in the neighborhood of such bodies. Electrical undulations may also be caused by alternately increasing and diminishing the resistance of the circuit, or by alternately increasing and diminishing the power of the battery. The internal resistance of a battery is diminished by bringing the voltaic elements nearer together, and increased by placing them farther apart. The reciprocal vibration of the elements of a battery, therefore, occasions an undulatory action in the voltaic current. The external resistance may also be varied. For instance, let mercury or some other liquid form part of a voltaic circuit, then the more deeply the conducting wire is immersed in the mercury or other liquid the less resistance does the liquid offer to the passage of the current. Hence, the vibration of the conducting wire in mercury or other liquid included in the circuit occasions undulations in the current. The vertical vibrations of the elements of a battery in the liquid in which they are immersed produces an undulatory action in the current by alternately increasing and diminishing the power of the battery.

In illustration of the method of creating electrical undulations, I shall show and describe one form of apparatus for producing the effect. I prefer to employ for this purpose an electro-magnet, A, Fig. 5, having a coil upon only one of its legs *b*. A steel-spring armature *c*, is firmly clamped by one extremity to the uncovered leg *d*, of the magnet, and its free end is allowed to project above the pole of the covered leg. The armature *c* can be set in vibration in a variety of ways, one of which is by wind, and in vibrating it produces a musical note of a certain definite pitch.

2837

When the instrument A is placed in a voltaic circuit, *g b e f g*, the armature *c* becomes magnetic, and the polarity of its free end is opposed to that of the magnet underneath. So long as the armature *c* remains at rest, no effect is produced upon the voltaic current; but the moment it is set in vibration to produce its musical note, a powerful inductive action takes place, and electrical undulations traverse the circuit *g b e f g*. The vibratory current passing through the coil of the electro-magnet *f* causes vibration in its armature *h* when the armatures *c h* of the two instruments A I are normally in unison with one another; but the armature *h* is unaffected by the passage of the undulatory current when the pitches of the two instruments are different.

A number of instruments may be placed upon a telegraphic circuit, as in Fig. 6. When the armature of any one of the instruments is set in vibration all the other instruments upon the circuit which are in unison with it respond, but those which have normally a different rate of vibration remain silent. Thus if A, Fig. 6, is set in vibration, the armatures of A^1 and A^2 will vibrate also, but all the others on the circuit will remain still. So if B^1 is caused to emit its musical note the instruments B B^2 respond. They continue sounding so long as the mechanical vibration of B^1 is continued but become silent with the cessation of its motion. The duration of the sound may be used to indicate the dot or dash of the Morse alphabet, and thus a telegraphic dispatch may be indicated by alternately interrupting and renewing the sound. When two or more instruments of different pitch are simultaneously caused to vibrate, all the instruments of corresponding pitches upon the circuit are set in vibration, each responding to that one only of the transmitting-instruments with which it is in unison. Thus the signals of A, Fig. 6, are repeated by A^1 and A^2, but by no other instrument upon the circuit; the signals of B^2 by B and B^1 and the signals of C^1 by C and C^2 — whether A, B^2, and C^1 are successively or simultaneously caused to vibrate. Hence by these instruments two or more telegraphic signals or messages may be sent simultaneously over the same circuit without interfering with one another.

I desire here to remark that there are many other uses to which these instruments may be put, such as the simultaneous transmission

of musical notes, differing in loudness as well as in pitch, and the telegraphic transmission of noises or sounds of any kind.

When the armature *c*, Fig. 5, is set in vibration, the armature *h* responds not only in pitch but in loudness. Thus, when *c* vibrates with little amplitude, a very soft musical note proceeds from *h*; and when *c* vibrates forcibly, the amplitude of the vibration of *h* is considerably increased, and the resulting sound becomes louder. So, if A and B, Fig. 6, are sounded simultaneously (A loudly and B softly), the instruments A^1 and A^2 repeat loudly the signals of A and B^1 B^2 repeat softly those of B.

One of the ways in which the armature *c*, Fig. 5, may be set in vibration has been stated above to be by wind. Another mode is shown in Fig. 7, whereby motion can be imparted to the armature by the human voice or by means of a musical instrument.

The armature *c*, Fig. 7, is fastened loosely by one extremity to the uncovered leg *d* of the electro-magnet *b*, and its other extremity is attached to the center of a stretched membrane, *a*. A cone, A, is used to converge sound-vibrations upon the membrane. When a sound is uttered in the cone the membrane *a* is set in vibration, the armature *c* is forced to partake of the motion, and thus electrical undulations are created upon the circuit E *b e f g*. These undulations are similar in form to the air vibrations caused by the sound — that is, they are represented graphically by similar curves. The undulatory current passing through the electro-magnet *f* influences its armature *h* to copy the motion of the armature *c*. A similar sound to that uttered into A is then heard to proceed from L.

In this specification the three words "oscillation," "vibration," and "undulation" are used synonymously, and in contradistinction to the terms "intermittent" and "pulsatory." By the term "body capable of inductive action," I mean a body which, when in motion, produces dynamical electricity. I include in the category of bodies capable of inductive action, brass, copper, and other metals, as well as iron and steel.

Having described my invention, what I claim and desire to secure by Letters Patent, is as follows:

1. A system of telegraphy in which the receiver is set in vibra-

2837

When the instrument A is placed in a voltaic circuit, *g b e f g*, the armature *c* becomes magnetic, and the polarity of its free end is opposed to that of the magnet underneath. So long as the armature *c* remains at rest, no effect is produced upon the voltaic current; but the moment it is set in vibration to produce its musical note, a powerful inductive action takes place, and electrical undulations traverse the circuit *g b e f g*. The vibratory current passing through the coil of the electro-magnet *f* causes vibration in its armature *h* when the armatures *c h* of the two instruments A I are normally in unison with one another; but the armature *h* is unaffected by the passage of the undulatory current when the pitches of the two instruments are different.

A number of instruments may be placed upon a telegraphic circuit, as in Fig. 6. When the armature of any one of the instruments is set in vibration all the other instruments upon the circuit which are in unison with it respond, but those which have normally a different rate of vibration remain silent. Thus if A, Fig. 6, is set in vibration, the armatures of A^1 and A^2 will vibrate also, but all the others on the circuit will remain still. So if B^1 is caused to emit its musical note the instruments B B^2 respond. They continue sounding so long as the mechanical vibration of B^1 is continued but become silent with the cessation of its motion. The duration of the sound may be used to indicate the dot or dash of the Morse alphabet, and thus a telegraphic dispatch may be indicated by alternately interrupting and renewing the sound. When two or more instruments of different pitch are simultaneously caused to vibrate, all the instruments of corresponding pitches upon the circuit are set in vibration, each responding to that one only of the transmitting-instruments with which it is in unison. Thus the signals of A, Fig. 6, are repeated by A^1 and A^2, but by no other instrument upon the circuit; the signals of B^2 by B and B^1 and the signals of C^1 by C and C^2— whether A, B^2, and C^1 are successively or simultaneously caused to vibrate. Hence by these instruments two or more telegraphic signals or messages may be sent simultaneously over the same circuit without interfering with one another.

I desire here to remark that there are many other uses to which these instruments may be put, such as the simultaneous transmission

of musical notes, differing in loudness as well as in pitch, and the telegraphic transmission of noises or sounds of any kind.

When the armature *c*, Fig. 5, is set in vibration, the armature *h* responds not only in pitch but in loudness. Thus, when *c* vibrates with little amplitude, a very soft musical note proceeds from *h*; and when *c* vibrates forcibly, the amplitude of the vibration of *h* is considerably increased, and the resulting sound becomes louder. So, if A and B, Fig. 6, are sounded simultaneously (A loudly and B softly), the instruments A^1 and A^2 repeat loudly the signals of A and B^1 B^2 repeat softly those of B.

One of the ways in which the armature *c*, Fig. 5, may be set in vibration has been stated above to be by wind. Another mode is shown in Fig. 7, whereby motion can be imparted to the armature by the human voice or by means of a musical instrument.

The armature *c*, Fig. 7, is fastened loosely by one extremity to the uncovered leg *d* of the electro-magnet *b*, and its other extremity is attached to the center of a stretched membrane, *a*. A cone, A, is used to converge sound-vibrations upon the membrane. When a sound is uttered in the cone the membrane *a* is set in vibration, the armature *c* is forced to partake of the motion, and thus electrical undulations are created upon the circuit E *b e f g*. These undulations are similar in form to the air vibrations caused by the sound — that is, they are represented graphically by similar curves. The undulatory current passing through the electro-magnet *f* influences its armature *h* to copy the motion of the armature *c*. A similar sound to that uttered into A is then heard to proceed from L.

In this specification the three words "oscillation," "vibration," and "undulation" are used synonymously, and in contradistinction to the terms "intermittent" and "pulsatory." By the term "body capable of inductive action," I mean a body which, when in motion, produces dynamical electricity. I include in the category of bodies capable of inductive action, brass, copper, and other metals, as well as iron and steel.

Having described my invention, what I claim and desire to secure by Letters Patent, is as follows:

1. A system of telegraphy in which the receiver is set in vibra-

2839

tion by the employment of undulatory currents of electricity, substantially as set forth.

2. The combination, substantially as set forth, of a permanent magnet or other body capable of inductive action, with a closed circuit, so that the vibration of the one shall occasion electrical undulations in the other, or in itself, and this I claim whether the permanent magnet be set in vibration in the neighborhood of the conducting-wire forming the circuit, or whether the conducting-wire be set in vibration in the neighborhood of the permanent magnet, or whether the conducting wire and the permanent magnet both simultaneously be set in vibration in each other's neighborhood.

3. The method of producing undulations in a continuous voltaic current by the vibration or motion of bodies capable of inductive action, or by the vibration or motion of the conducting-wire itself in the neighborhood of such bodies as set forth.

4. The method of producing undulations in a continuous voltaic circuit by gradually increasing and diminishing the resistance of the circuit, or by gradually increasing and diminishing the power of the battery, as set forth.

5. The method of and apparatus for transmitting vocal or other sounds telegraphically, as herein described, by causing electrical undulations, similar in form to the vibrations of the air accompanying the said vocal or other sounds, substantially as set forth.

In testimony whereof I have hereunto signed my name this 20th day of January, A. D. 1876.

ALEX. GRAHAM BELL.

Witnesses:

THOMAS E. BARRY,

P. D. RICHARDS.

A. G. BELL.

ELECTRIC TELEGRAPHY.

2840

No. 186,787. Patented Jan. 30, 1877.

Fig. 1.

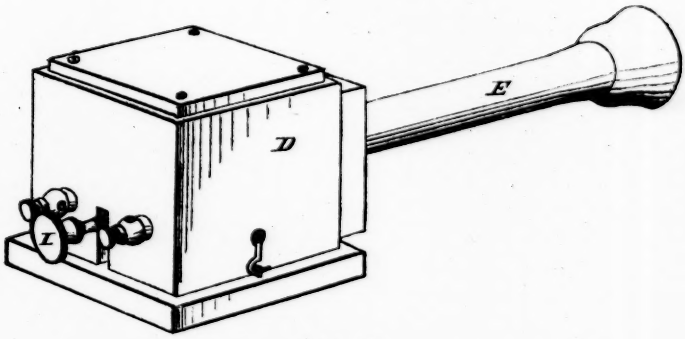

Fig. 2.

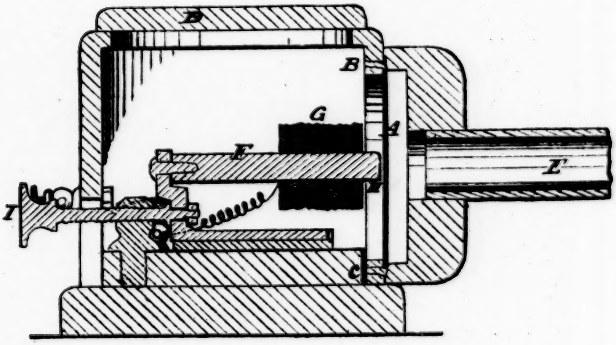

Fig. 3.

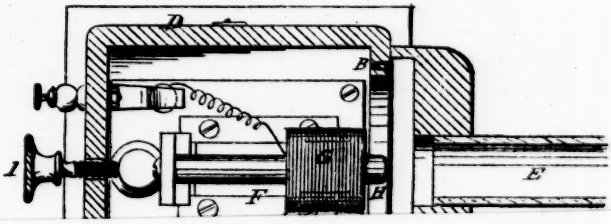

2839

tion by the employment of undulatory currents of electricity, substantially as set forth.

2. The combination, substantially as set forth, of a permanent magnet or other body capable of inductive action, with a closed circuit, so that the vibration of the one shall occasion electrical undulations in the other, or in itself, and this I claim whether the permanent magnet be set in vibration in the neighborhood of the conducting-wire forming the circuit, or whether the conducting-wire be set in vibration in the neighborhood of the permanent magnet, or whether the conducting wire and the permanent magnet both simultaneously be set in vibration in each other's neighborhood.

3. The method of producing undulations in a continuous voltaic current by the vibration or motion of bodies capable of inductive action, or by the vibration or motion of the conducting-wire itself in the neighborhood of such bodies as set forth.

4. The method of producing undulations in a continuous voltaic circuit by gradually increasing and diminishing the resistance of the circuit, or by gradually increasing and diminishing the power of the battery, as set forth.

5. The method of and apparatus for transmitting vocal or other sounds telegraphically, as herein described, by causing electrical undulations, similar in form to the vibrations of the air accompanying the said vocal or other sounds, substantially as set forth.

In testimony whereof I have hereunto signed my name this 20th day of January, A. D. 1876.

ALEX. GRAHAM BELL.

Witnesses:

THOMAS E. BARRY,

P. D. RICHARDS.

A. G. BELL.

ELECTRIC TELEGRAPHY.

2840

No. 186,787. Patented Jan. 30, 1877.

Fig. 1.

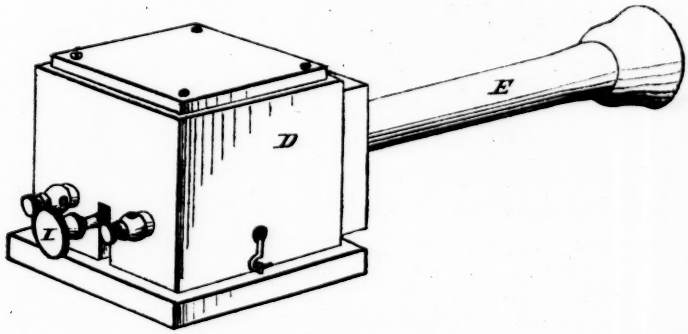

Fig. 2.

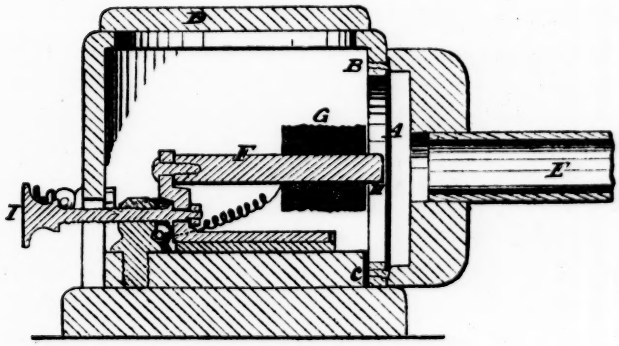

Fig. 3.

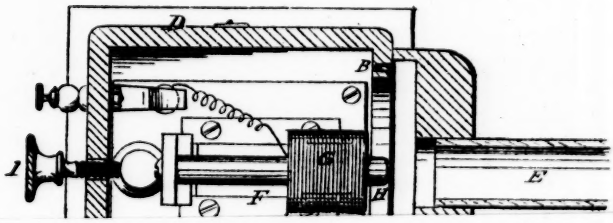

2839

tion by the employment of undulatory currents of electricity, substantially as set forth.

2. The combination, substantially as set forth, of a permanent magnet or other body capable of inductive action, with a closed circuit, so that the vibration of the one shall occasion electrical undulations in the other, or in itself, and this I claim whether the permanent magnet be set in vibration in the neighborhood of the conducting-wire forming the circuit, or whether the conducting-wire be set in vibration in the neighborhood of the permanent magnet, or whether the conducting wire and the permanent magnet both simultaneously be set in vibration in each other's neighborhood.

3. The method of producing undulations in a continuous voltaic current by the vibration or motion of bodies capable of inductive action, or by the vibration or motion of the conducting-wire itself in the neighborhood of such bodies as set forth.

4. The method of producing undulations in a continuous voltaic circuit by gradually increasing and diminishing the resistance of the circuit, or by gradually increasing and diminishing the power of the battery, as set forth.

5. The method of and apparatus for transmitting vocal or other sounds telegraphically, as herein described, by causing electrical undulations, similar in form to the vibrations of the air accompanying the said vocal or other sounds, substantially as set forth.

In testimony whereof I have hereunto signed my name this 20th day of January, A. D. 1876.

ALEX. GRAHAM BELL.

Witnesses:

THOMAS E. BARRY,

P. D. RICHARDS.

A. G. BELL.

ELECTRIC TELEGRAPHY.

2840

No. 186,787. Patented Jan. 30, 1877.

Fig. 1.

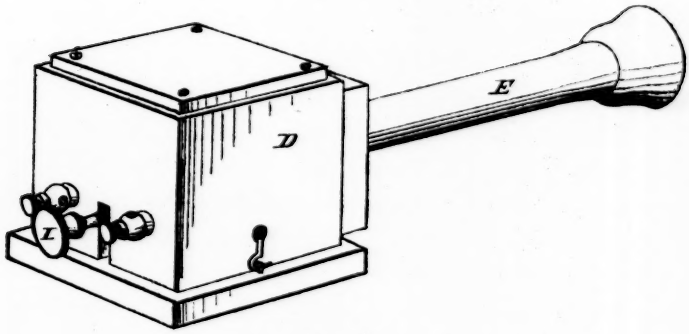

Fig. 2.

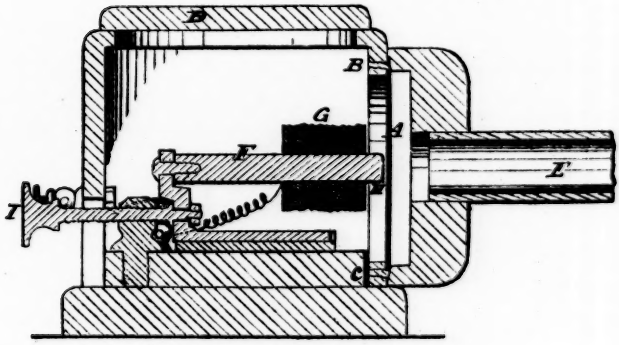

Fig. 3.

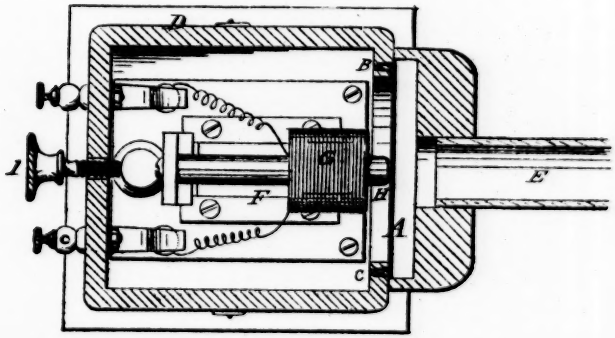

Attest

A. Pollok
Ewell A. Stick.

Inventor

Alexander Graham Bell

2 Sheets—Sheet 2.

A. G. BELL.

ELECTRIC TELEGRAPHY.

2841

No. 186,787. Patented Jan. 30, 1877.

Fig. 4.

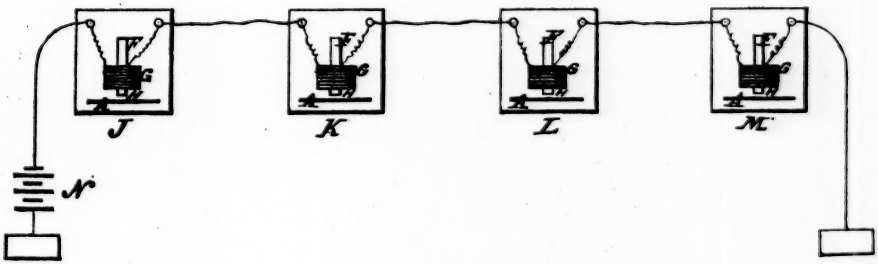

Fig. 5.

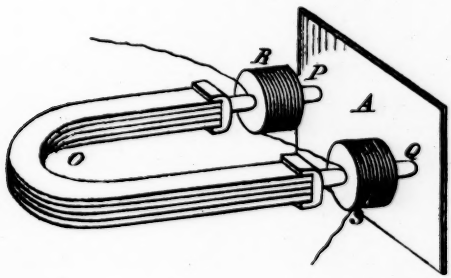

Fig. 6.

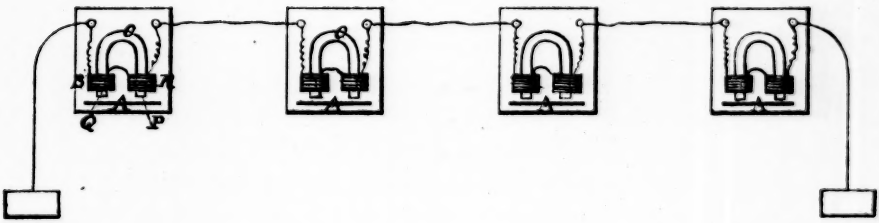

Attest:

A. Pollok

Evelle A. Dick

Inventor:

Alexander Graham Bell

COMPLAINANT'S EXHIBIT 2, W. B. PREBLE, JR., EXAMINER.

UNITED STATES PATENT OFFICE.

ALEXANDER GRAHAM BELL, OF BOSTON, MASSACHUSETTS.

IMPROVEMENT IN ELECTRIC TELEGRAPHY.

Specification forming part of Letters Patent No. 186,787, dated January 30, 1877; application filed January 15, 1877.

To all whom it may concern:

Be it known that I, Alexander Graham Bell, of Boston, Massachusetts, have invented certain new and useful Improvements in Electric Telephony, of which the following is a specification:

In Letters Patent granted to me on the 6th day of April, 1875, No. 161,739, and in an application for Letters Patent of the United States now pending, I have described a method of and apparatus for producing musical tones by the action of a rapidly interrupted electrical current, whereby a number of telegraphic signals can be sent simultaneously along a single circuit.

In another application for Letters Patent now pending in the United States Patent Office, I have described a method of and apparatus for inducing an intermittent current of electricity upon a line-wire, whereby musical tones can be produced and a number of telegraphic signals be sent simultaneously over the same circuit, in either or in both directions; and in Letters Patent granted to me March 7, 1876, No. 174,465, I have shown and described a method of an apparatus for producing musical tones by the action of undulatory currents of electricity, whereby a number of telegraphic signals can be sent simultaneously over the same circuit, in either or in both directions, and a single battery be used for the whole circuit.

In the applications and patents above referred to, signals are transmitted simultaneously along a single wire by the employment of transmitting-instruments, each of which occasions a succession of electrical impulses differing in rate from the others, and are received

2843

without confusion by means of receiving-instruments, each tuned to a pitch at which it will be put in vibration to produce its fundamental note by one only of the transmitting-instruments. A separate instrument is therefore employed for every pitch, each instrument being capable of transmitting or receiving but a single note, and thus as many separate instruments are required as there are messages or musical notes to be transmitted.

My invention has for its object, first, the transmission simultaneously of two or more musical notes or telegraphic signals along a single wire, in either or both directions, and with a single battery for the whole circuit, without the use of as many instruments as there are musical notes or telegraphic signals to be transmitted; second, the electrical transmission by the same means of articulate speech, and sound of every kind, whether musical or not; third, the electrical transmission of musical tones, articulate speech, or sounds of every kind, without the necessity of using a voltaic battery.

In my Patent No. 174,465, dated March 7, 1876, I have shown as one form of transmitting-instrument a stretched membrane to which the armature of an electro-magnet is attached, whereby motion can be imparted to the armature by the human voice, or by means of a musical instrument, or by sounds produced in any way.

In accordance with my present invention I substitute for the membrane and armature shown in the transmitting and receiving instruments alluded to above a plate of iron or steel capable of being thrown into vibration by sounds made in its neighborhood.

The nature of my invention and the manner in which the same is or may be carried into effect will be understood by reference to the accompanying drawings, in which —

Figure 1 is a perspective view of one form of my electric telephone. Fig. 2 is a vertical section of the same, and Fig. 3 is a plan view of the apparatus. Fig 4 is a diagram illustrating the arrangement upon circuit.

Similar letters in the drawings represent corresponding portions of the apparatus.

A in said drawings represents a plate of iron or steel, which is fastened at B and C to the cover or sounding-box D. E represents

a speaking-tube, by which sounds may be conveyed to or from the plate A. F is a bar of soft iron. G is a coil of insulated copper wire, placed around the extremity of the end H of the bar F. I is an adjusting-screw, whereby the distance of the end H from the plate A may be regulated.

The electric telephones, J, K, L and M, are placed at different stations upon a line, and are arranged upon circuit with a battery, N, as shown in diagram, Fig. 4.

I have shown the apparatus in one of its simplest forms, it being well understood that the same may be varied in arrangement, combination, general construction, and form, as well as material of which the several parts are composed.

The operation and use of this instrument are as follows:

I would premise by saying that this instrument is and may be used both as a transmitter and as a receiver — that is to say, the sender of the message will use an instrument in every particular identical in construction and operation with that employed by the receiver, so that the same instrument can be used alternately as a receiver and a transmitter.

In order to transmit a telegraphic message by means of these instruments, it is only necessary for the operator at a telephone (say J) to make a musical sound, in any way, in the neighborhood of the plate A, — for convenience of operation, through the speaking-tube E, — and to let the duration of the sound signify the dot or dash of the Morse alphabet, and for the operator who receives his message (say at M) to listen to his telephone, preferably through the speaking-tube E. When two or more musical signals are being transmitted over the same circuit, all the telephones reproduce the signals for all the messages; but as the signals for each message differ in pitch from those for the other messages, it is easy for an operator to fix his attention upon one message and ignore the others.

When a large number of despatches are being simultaneously transmitted it will be advisable for the operator to listen to his telephone through a resonator, which will re-enforce to his ear the signals which he desires to observe. In this way he is enabled to direct his attention to the signals for any given message without

being distracted or disturbed by the signals for any other messages that may be passing over the line at the time.

The musical signals, if preferred, can be automatically received by means of a resonator, one end of which is closed by a membrane, which vibrates only when the note with which the resonator is in unison is emitted by the receiving-telephone. The vibrations of the membrane may be made to operate a circuit-breaker, which will actuate a Morse sounder or a telegraphic recording or registering apparatus.

One form of vibratory circuit-breaker which may be used for this purpose I have described in Letters Patent No. 178,399, June 6, 1876. Hence, by this plan the simultaneous transmission of a number of telegraphic messages over a single circuit in the same or in both directions, with a single main battery for the whole circuit and a single telephone at each station, is rendered practicable. This is of great advantage in this: that for the conveyance of several messages, or signals, or sounds over a single wire simultaneously, it is no longer necessary to have separate instruments correspondingly tuned for each given sound, which plan requires nice adjustment of the corresponding instruments, while the present improvement admits of a single instrument at each station; or if, for convenience, several are employed, they all are alike in construction, and need not be adjusted or tuned to particular pitches.

Whatever sound is made in the neighborhood of any telephone — say at J, Fig. 4 — is echoed in fac-simile by the telephones of all the other stations upon the circuit; hence this plan is also adapted for the use of the transmitting intelligibly the exact sounds of articulate speech. To convey an articulate message it is only necessary for an operator to speak in the neighborhood of his telephone, preferably through the tube E, and for another operator at a distant station upon the same circuit to listen to the telephone at that station. If two persons speak simulaneously in the neighborhood of the same or different telephones, the utterances of the two speakers are reproduced simultaneously by all the other telephones on the same circuit; hence, by this plan, a number of vocal messages may be transmitted simultaneously on the same circuit in either or both directions. All the effects noted above may be produced by the

same instruments without a battery by rendering the central bar F H permanently magnetic. Another form of telephone, for use without a battery, is shown in Fig. 5, in which O is a compound permanent magnet, to the poles of which are affixed pole-pieces of soft iron, P Q, surrounded by helices of insulated wire, R S.

Fig. 6 illustrates the arrangement upon circuits of similar instruments to that shown in Fig. 5.

In lieu of the plate A in above figures, iron or steel reeds of definite pitch may be placed in front of the electro-magnet O, and, in connection with a series of such instruments of different pitches, an arrangement upon circuit may be employed similar to that shown in my Patent No. 174,465, and illustrated in Fig. 6 of Sheet 2 in said patent. The battery, of course, may be omitted.

This invention is not limited to the use of iron or steel, but includes within its scope any material capable of inductive action.

The essential feature of the invention consists in the armature of the receiving instrument being vibrated by the varying attraction of the electro-magnet, so as to vibrate the air in the vicinity thereof in the same manner as the air vibrated at the other end by the production of the sound. It is therefore by no means necessary or essential that the transmitting-instrument should be of the same construction as the receiving instrument. Any instrument receiving and transmitting the impression of agitated air may be used as the transmitter, although for convenience, and for reciprocal communication, I prefer to use like instruments at either end of an electrical wire. I have heretofore described and exhibited such other means of transmitting sound, as will be seen by reference to the proceedings of the American Academy of Arts and Sciences, Volume XII.

For convenience, I prefer to apply to each instrument a call-bell. This may be arranged so as to ring, first, when the main circuit is opened; second, when the bar F comes into contact with the plate A. The first is done to call attention; the second indicates when it is necessary to readjust the magnet, for it is important that the distance of the magnet from the plate should be as little as possible, without, however, being in contact. I have also found that the electrical undulations produced upon the main line by the vibration

of the plate A are intensified by placing the coil G at the end of the bar F nearest the plate A, and not extend it beyond the middle, or thereabout.

Having thus described my invention, what I claim, and desire to secure by Letters Patent, is —

1. The union upon and by means of an electric circuit of two or more instruments, constructed for operation substantially as herein shown and described, so that if motion of any kind or form be produced in any way in the armature of any one of the said instruments, the armatures of all the other instruments upon the same circuit will be moved in like manner and form, and if such motion be produced in the former by sound, like sound will be produced by the motion of the latter.

2. In a system of electric telegraphy or telephony, consisting of transmitting and receiving instruments united upon an electric circuit, the production, in the armature of each receiving-instrument, of any given motion by subjecting said armature to an attraction varying in intensity, however such variation may be produced in the magnet; and hence I claim the production of any given sound or sounds from the armature of the receiving-instrument by subjecting said armature to an attraction varying in intensity, in such manner as to throw the armature into that form of vibration that characterizes the given sound or sounds.

3. The combination, with an electro-magnet, of a plate of iron or steel, or other material capable of inductive action, which can be thrown into vibration by the movement of surrounding air or by the attraction of a magnet.

4. In combination with a plate and electro-magnet, as before claimed, the means herein described, or their mechanical equivalents, of adjusting the relative position of the two so that, without touching, they may be set as closely together as possible.

5. The formation, in an electric telephone such as herein shown and described, of a magnet with a coil upon the end or ends of the magnet nearest the plate.

6. The combination, with an electric telephone such as described, of a sounding-box, substantially as herein shown and set forth.

7. In combination with an electric telephone, as herein described,

the employment of a speaking or hearing tube for conveying sounds to or from the telephone, substantially as set forth.

8. In a system of electric telephony, the combination of a permanent magnet with a plate of iron or steel, or other material capable of inductive action, with coils upon the end or ends of said magnet nearest the plate, substantially as set forth.

In testimony whereof I have hereunto signed my name this 13th day of January, A. D. 1877.

A. GRAHAM BELL.

Witnesses:

HENRY R. ELLIOTT,

EWELL A. DICK.

COMPLAINANT'S EXHIBIT 3, W. P. PREBLE, JR., EXAMINER.

ASSIGNMENT OF PATENT RIGHT.

Liber R 21, p. 399.

To all whom it may concern:

Whereas, Alexander Graham Bell, of Boston, in the county of Suffolk and State of Massachusetts, did obtain three several Letters Patent of the United States, for an improved system of telegraphy, telephony, and telephonic apparatus, which Letters Patent bear date respectively, March seventh, A. D. eighteen hundred and seventy-six, and numbered 174,465, June sixth, A. D. eighteen hundred and seventy-six, and numbered 178,399, and January thirtieth, A. D. eighteen hundred and seventy-seven, and numbered 186,787.

And whereas, Gardiner G. Hubbard, of Cambridge, in the county of Middlesex and State of Massachusetts, trustee, is desirous of acquiring an interest therein, now this indenture witnesseth, that for a valuable consideration, viz.: one dollar and other valuable consideration to me in hand paid, the receipt of which is hereby acknowledged, I have assigned, sold, and set over, and by these presents do assign, sell, and set over unto the said Gardiner G. Hubbard, trustee, all the right, title and interest I have in the above described invention, as secured to me by Letters Patent, for, to, and in the

2852

United States and Territories, and in no other place or places. The same to be held and enjoyed by the said Gardiner G. Hubbard, trustee, for his own use and behoof, and for the use and behoof of his legal representatives, to the full end of the term for which said Letters were granted, as fully and entirely as the same would have been held and enjoyed by me, had this assignment and sale not been made.

In testimony whereof I have hereunto set my hand and affixed my seal this day of July, in the year of our Lord one thousand eight hundred and seventy-seven.

ALEXANDER GRAHAM BELL. [SEAL]

Sealed and delivered in presence of
CHAS. EUSTIS HUBBARD.

Recorded July 28, 1877.
Ex'd E. A. M., M. McK.

COMPLAINANT'S EXHIBIT 4, W. P. PREBLE, JR., EXAMINER.

ASSIGNMENT OF PATENT RIGHT.

Liber Y 22, page 460.

To all whom it may concern:

Whereas, Alexander Graham Bell, of Salem, Massachusetts, as assignor to himself, Thomas Sanders, and Gardiner G. Hubbard, did obtain Letters Patent of the United States, bearing date April 6th, 1875, and numbered 161,739. And whereas, said Alex. Graham Bell did obtain Letters Patent of the United States, bearing date March 7th, 1876, and numbered 174,465; bearing date June 6th, 1878, and numbered 178,399; and bearing date January 30th, 1877, and numbered 186,787, all of said Letters Patent being for improvements in "telegraphy, telephony, and telephonic apparatus," invented by said Alexander Graham Bell. And whereas, all of said Letters Patent have been assigned to Gardiner G. Hubbard, trustee, said Letters numbered 161,739, by deed of assignment delivered July 9th, 1877, and recorded in Liber T 21, page 448, of Transfers of Patents, and said Letters numbered 174,465, 178,399, and 186,787,

2853

by deed of assignment delivered July 9th, 1877, and recorded in Liber R 21, page 399, of Transfers of Patents, and said Hubbard, trustee, is now the owner of the above described inventions, secured by said Letters Patents. And whereas, the Bell Telephone Company, a corporation duly established under the laws of the commonwealth of Massachusetts, and located at Boston, is desirous of acquiring the ownership of said inventions secured by said Letters Patent.

Now, this indenture witnesseth, that I, Gardiner G. Hubbard, trustee, in consideration of one dollar and other valuable consideration to me in hand paid by said Bell Telephone Company, the receipt whereof is hereby acknowledged, have assigned, sold and set over, and by these presents do assign, sell and set over unto the said Bell Telephone Company, all my right, title and interest in the above described inventions and in and to said Letters Patent, each and all of them, the same to be held and enjoyed by the said Bell Telephone Company for its own use and behoof, and for the use and behoof of its legal representatives to the full end of the term for which said Letters were granted, and any extension or reissue thereof, as fully and entirely as the same would have been held and enjoyed by me had this assignment and sale not been made.

In testimony whereof I have hereunto set my hand and seal this twentieth day of July, in the year eighteen hundred and seventy-eight, being thereto duly authorized.

[SEAL] GARDINER G. HUBBARD, *Trustee.*

In presence of

C. E. HUBBARD.

R. W. DEVONSHIRE.

Recorded Oct. 3d, 1878.

Ex. J. A. W., M. McK.

17

2854

EVIDENCE FOR DEFENDANT.

TAKEN UNDER AND PURSUANT TO THE SIXTY-SEVENTH RULE OF THE SUPREME COURT OF THE UNITED STATES, IN EQUITY, AS AMENDED,

BEFORE ME,

W. C. WITTER, *Examiner.*

NEW YORK, March 19, 1879, 11 A. M.

Examination adjourned to March 20, 1879, at 11 A. M.

NEW YORK, March 20, 1879, 11 A. M.

Examination adjourned to March 21, 1879, at 10½ A. M.

NEW YORK, March 21, 1879, at 10½ A. M.

Parties met pursuant to adjournment.

Present: GEO. GIFFORD, Esq., and CAUSTEN BROWNE, Esq., *of Counsel for Defendant; and*
CHAUNCEY SMITH, J. J. STORROW, and C. E. HUBBARD, *of Counsel for Complainants.*

The defendant put in evidence the following documentary matter, to wit: —

Official copy of English patent, granted in 1840 to C. Wheatstone and W. F. Cooke, No. 8,345, marked "Defendant's Exhibit Wheatstone and Cooke Patent, W. C. W., Ex'r."

Official copy of English patent, granted in 1870 to C. F. Varley, No. 1044, marked "Defendant's Exhibit Varley Patent, W. C. W., Ex'r."

Official copy of English patent, granted July 29, 1874, to J. H. Johnson, No. 2,646, for communication from Elisha Gray, marked "Defendant's Exhibit Johnson Patent, Gray's Magnet Receiver, W. C. W., Ex'r."

Certified copy of American patent, granted to Edison and Harrington, August 12, 1873, No. 141,777, marked "Defendant's Exhibit Edison Relay Magnet Patent, W. C. W., Ex'r."

Certified copy of American patent, granted to Elisha Gray, July 27, 1875, No. 166,096, and marked "Defendant's Exhibit Gray's Animal Tissue Patent, W. C. W., Ex'r."

Certified copy of American patent granted to Elisha Gray, July 27, 1875, No. 166,094, marked "Defendant's Exhibit, Gray's Tuned Bar Receiver Patent, W. C. W., Ex'r."

Certified copy of American patent granted to Elisha Gray, July 27, 1875, No. 166,095, marked "Defendant's Exhibit Gray Magnet Receiver Patent, W. C. W., Ex'r."

Certified copy of American patent granted to Elisha, Gray, April 11, 1876, No. 175,971, marked "Defendant's Exhibit Gray's Sounding-Box Receiver Patent, W. C. W., Ex'r."

Certified copy of American patent granted to the Harmonic Telegraph Company, assignee of Elisha Gray, January 16, 1877, No. 186,340, marked "Defendant's Exhibit Gray's Closed Circuit Patent, W. C. W., Ex'r."

Certified copy of caveat filed by Elisha Gray February 14, 1876, and marked "Defendant's Exhibit Gray's Caveat, W. C. W., Ex'r."

Certified copy of the file wrapper and contents, and drawing, in the matter of the application of Elisha Gray, filed October 29, 1877, marked "Defendant's Exhibit Gray's Speaking Telephone Art Application, W. C. W., Ex'r."

Certified copy of the file wrapper and contents and drawing in the matter of the application of Elisha Gray, filed October 29, 1877, marked "Defendant's Exhibit Gray's Liquid Transmitter Speaking Telephone Application, W. C. W., Ex'r."

Certified copy of the file wrapper and contents and drawing in the matter of the application of Elisha Gray, filed October 29, 1877, marked "Defendant's Exhibit Gray's Concave Diaphragm Receiver Speaking Telephone Application, W. C. W., Ex'r."

Certified copy of the file wrapper and contents and drawing in the matter of the application of Elisha Gray, filed October 29, 1877, marked "Defendant's Exhibit Gray's Concave Diaphragm Receiver Speaking Telephone Application, W. C. W., Ex'r."

Certified copy of American patent granted to Elisha Gray, June 25, 1878, No. 205,378, marked "Defendant's Exhibit Gray's Common Receiver Patent, W. C. W., Ex'r."

2856

Extract, beginning on page 136, ending on page 138, from a publication of date 1867, entitled "The Electric Telegraph, by Robert Sabine."

Extract beginning on page 164, and ending on page 167, from a publication of date , entitled "Electric Telegraph, by Doctor Lardner."

Extract beginning on page 257, and ending on page 258, from a publication of date 1867, entitled "Electricity, by Robert W. Ferguson," etc.

Certified copy of American patent, granted to The Harmonic Telegraph Company, assignee of Elisha Gray, dated July 4, 1876, No. 179,519, marked "Defendant's Exhibit Gray's Printer Patent, W. C. W., Ex'r."

Certified copy of American patent granted to The Harmonic Telegraph Company, assignee of Elisha Gray, December 18, 1877, No. 198,379, marked "Defendant's Exhibit Gray Double Bar Magnet Patent."

DEPOSITION OF WILLIAM M. GOODRIDGE.

Direct Examination by CAUSTEN BROWNE, Esq., *of Counsel for Defendant.*

Int. 1. What is your name, age, residence, and occupation?

Ans. William M. Goodridge; I am forty-three years old. I reside at Highland Park, Illinois, and am assistant to Mr. Elisha Gray in the development of his electrical inventions.

Int. 2. When did you begin to be so employed by Mr. Gray?

Ans. In the early part of the year 1874.

Int. 3. In what month of 1874, if you can state, did you begin to be exclusively employed in the manner you have stated?

Ans. May; in the month of May.

Int. 4. In what employment were you just before that?

Ans. In the employ of the Western Electric Manufacturing Company, of Chicago, Illinois.

Int. 5. What relation, if any, was Mr. Gray at that time sustaining to that company?

Ans. He was the superintendent.

Int. 6. In the course of your employment by Mr. Gray, have you had occasion to make or assist in or superintend the making of different instruments for the electrical transmission of musical tones?

Ans. I have.

Int. 7. Did you do any such work for Mr. Gray before you became exclusively employed by him, which you say was in May, 1874?

Ans. I did.

Int. 8. Will you state what that work was? And if the instrument then made is shown in the drawing of any patent or represented by any model you have here, will you please refer to such patent or model?

Ans. I made an instrument for the purpose of transmitting two tones simultaneously or singly over a telegraphic circuit, which circuit was closed. That [*pointing to model marked "Defendant's Exhibit Gray's Two Tone Transmitter"*] is a duplicate of the instrument which I made.

[*The exhibit referred to is put in evidence by the defendant.*]

The instrument is also shown in various views in Mr. Gray's English patent of July 29, 1874, being marked "Defendant's Exhibit Johnson Patent, Gray's Magnet Receiver, W. C. W., Ex'r."

Int. 9. You say you made this instrument before May, 1874: state as nearly as you can in what year and month it was.

Ans. It was made or commenced on the 4th April, 1874.

Int. 10. Did you see this instrument used at or about the time it was made? If so, who was using it and in what manner?

Ans. I used it myself sufficiently to test its workings. I do not know or remember of seeing others use it at that time.

Int. 11. As you used it, upon what were its transmitted tones received?

Ans. Upon a thin plate of metal, represented in Figure 3 of the same patent I have referred to, representing the transmitting instrument. The plate of metal forming part of the circuit and being one pole, the body of the operator being also part of the circuit and being the other pole of the circuit, by rubbing the thin plate with the palm of the hand sounds were produced between the plate and

285-8

the hand. The plate used was a plate of tin or a sheet of German silver; an oyster can probably was also used for the purpose.

Int. 12. Can you furnish us with a reproduction of the plate or sheet of metal which you say was used as described in the last answer?

Ans. I can't give you the exact shape or form of it, but I can give you a piece that will answer the purpose. There is a piece that will illustrate the plate used.

[*The witness refers to a tin plate, which is put in evidence and marked "Defendant's Exhibit Tin Plate Receiver, W. C. W., Ex'r."*]

Int. 13. What does the screw which is attached to the side of this exhibit represent?

Ans. A convenient form for connecting it in the circuit; but it was not used for the original test on the original plate, that connection being made by resting the wire upon the plate or the plate upon the wire.

Int. 14. What became of the two-tone transmitting instrument which you made and tried in the manner just described?

Ans. It was sent to Washington as a model for the Patent Office, to accompany Mr. Gray's application for his Animal Tissue patent, so called, being the grant granted July 22, 1875, No. 166,096, marked "Defendant's Exhibit Gray's Animal Tissue Patent, W. C. W., Ex'r."

Int. 15. Did you, after making the two-tone transmitter, make an instrument for Mr. Gray for transmitting one tone? And if so, please describe the instrument which you so made.

Ans. I did. I have here an instrument, part of which is the original instrument, additions being added for convenience of connections of the line wires and battery. It consisted of a small electro-magnet, with a piece of watch spring attached to one pole and extending across and free from the other; a screw was so placed that it touched the spring when at rest, the battery current passing through the magnet coil to the spring, from there to the screw, touching it back to the battery. The line wire was attached, one end to the screw the other to the spring, forming a continuous circuit from the battery, through the magnet coils, over the line back to the battery. When this spring is in contact with the screw,

the battery current is short-circuited through the magnet; when the spring and screw are separated, the battery circuit is through the magnet and line; when the battery current is short-circuited, a portion of the current is still upon the line, so that the circuit on the line was always closed.

[*The instrument referred to by the witness in the above answer, and produced by him, is put in evidence for the defendant, and is marked, "Gray's First Single Tone Transmitter, W. C. W., Ex'r."*]

Int. 16. What parts of this model are the identical parts, as you said?

Ans. The magnets are the original ones. The watch spring is new, but the clamp to hold it is the original piece. The heel iron is the original one. The new parts are the base boards and the mountings and the binding screw.

Int. 17. State, as nearly as you can, the time when you made the instrument like Exhibit Gray's First Single Tone Transmitter.

Ans. In the early part of May, 1874.

Int. 18. What means did you use or see used with this First Single Tone Transmitter, for receiving the transmitted tone over the closed circuit you have described?

Ans. I have used it and seen it used with all the various forms of receiver that we have used.

Int. 19. Do you mean that you have used and seen used in this manner the identical instrument which you made in the early part of May, 1874?

Ans. I do.

Int. 20. Please describe each of the receiving instruments you refer to as having been used to receive the single tone from the transmitting instrument just mentioned.

Ans. First. The animal tissue receiver, before mentioned.

Second. Two improved forms of animal tissue receiver.

Third. A paper drum receiver.

Fourth. A magnet receiver, with a hollow tin box placed on or near the poles.

Fifth. Another form of magnet receiver, consisting in a concave metallic diaphragm.

2860

Sixth. Another form of magnet receiver, the magnets enclosed in the box.

Seventh. Another form of magnet receiver, consisting of an iron plate mounted upon a sounding box.

Then there were some receivers used which were modifications of the particular forms I have mentioned.

Int. 21. Referring you now to the two improved forms of animal tissue receivers, will you state what the first one was, and produce it, or a representation of it, and explain the manner in which it was used?

Ans. The first one consisted of a thin plate of German silver mounted upon a violin in place of the strings. This instrument, which I have in my hands, is either the original one or one just like it. When used, one of the line wires was connected with the plate, the other held in the hand of the operator; and by his rubbing the plate with the palm of the hand the tones sent by the transmitter would be reproduced between the plate and the hand.

[*The instrument referred to by the witness is put in evidence, and marked "Defendant's Exhibit Animal Tissue Violin Receiver, W. C. W., Ex'r."*]

Int. 22. When and where was Gray's first single-tone transmitter first used with the violin receiver just put in evidence?

Ans. In the early part of May, 1874, at the works of the Western Electric Manufacturing Company in Chicago.

Int. 23. Now, as to the second of the improved forms of animal tissue receiver: will you describe it and its operation, and produce it, or a representation of it?

Ans. In this instrument the plate of metal was mounted upon a revolving disk or drum, so as to attain a continuous forward motion, in connection with the hand, instead of forward and back, as with the violin. I produce an instrument which is a substantial reproduction of the instrument just described.

[*The instrument produced is put in evidence for the defendant, and marked "Defendant's Exhibit Gray's Animal Tissue Revolving Plate Receiver, W. C. W., Ex'r."*]

Int. 24. In what year and month was this revolving drum

receiver first used with the first Gray single tone transmitter, in a closed circuit, as you have described?

Ans. I can't give you the month, but the year was 1875.

Int. 25. Do you mean that that was the first of such a use, or the first that you knew of?

Ans. The first that I knew of.

Int. 26. Was this revolving plate receiver afterwards combined with a diaphragm transmitter, for the purpose of transmitting articulate speech through a closed electrical circuit?

Ans. It was.

Int. 27. Is this combination shown in an American patent taken by Mr. Gray?

Ans. It is (except that the form of the transmitter is different) shown in Mr. Gray's patent for speaking telephone, No. 210,776, dated December 10, 1878. The diaphragm transmitter shown in the drawing of this patent is the kind known as the water transmitter. The transmitter which was employed in the combination as I saw it was an Edison Carbon Transmitter.

[*The Gray patent referred to by the witness is put in evidence for the defendant, and marked "Defendant's Exhibit Gray's Revolving Drum Telephone Patent, W. C. W., Ex'r."*]

Int. 28. Now as to the paper drum receiver: will you describe it and the manner of its use, in connection with the first single tone transmitter in the closed circuit, and produce it, or a representation of it, and state when it was first so used to your knowledge, and where?

Ans. The paper drum receiver consisted of a short cylinder of metal, each end covered with gilt or silver paper, like the heads of a drum, the gilt or silver surface of the paper being in contact with the metal cylinder. A binding post was screwed to the cylinder in contact with it, into which was screwed a metallic handle insulated from it, with a binding post upon it. In using it, one wire of the line was connected to the binding post, fastened to the cylinder, the other wire fastened to the binding post or the handle. Upon holding the handle by the hand, and placing the paper drum head in contact with the ear, the sounds sent from the transmitter could be heard. This instrument was first so used in May or June, 1874, at

2862

the works of the Electric Manufacturing Company, in Chicago. I produce an instrument representing it.

[*The instrument produced by the witness is marked "Defendant's Exhibit Paper Drum Receiver, W. C. W., Ex'r."*]

[*Adjourned to March* 22, 1879, *at* 10.30 *A. M.*]

NEW YORK, March 22, 1879, 10.30 A. M.

Int. 29. Now as to the magnet receiver with a hollow tin box placed on or near the poles of the magnet: will you describe this receiver and the manner of its use in connection with the first single tone transmitter in the closed circuit, and produce it, or a representation of it, and state when it was first so used, to your knowledge, and where?

Ans. The receiving instrument consisted of an electro-magnet mounted upon a wooden base, upon which were placed two binding posts, to which the wires of the coil were connected. When placed in the line, the line wires were also connected with the binding posts, forming a continuous circuit from the battery through the transmitting magnet and receiving magnet. A hollow tin box, with holes in the top, was placed upon or held near to the poles of the magnet; when so placed or held, the transmitted tone could be distinctly heard, varying in power the nearer the box was to the poles, without touching them. The first use of it was made in the early part of the month of May, or near the middle, 1874, at the works of the Western Electric Manufacturing Company, in Chicago. *That* is a representation of the instrument so used and described.

[*The witness refers to the model, which is now put in evidence for defendant, and marked "Gray's Resonant Box Magnet Receiver, W. C. W., Ex'r."*]

Int. 30. What effect was obtained when the box rested upon the poles of the magnet as compared with the effect obtained when the box was near to without touching the magnet?

Ans. The tone was not as loud or as full as when a little separated.

Int. 31. Please describe the manner in which these tests were made, with the box touching and not touching the poles, so that we may judge of the value of the practical results obtained.

2863

Ans. The transmitting instrument would be placed in one room and the receiving instrument in another, the rooms being from eighty to one hundred feet apart, on the same floor. The sound of the transmitting instrument, disconnected from the line, could not be heard in the room where the receiving instrument was placed. In the room where the receiving instrument was, a great many noises and sounds could be heard from the running of machinery, said room being a little office partitioned off from a large workshop by a low partition, in which perhaps fifty men were employed and making a great deal of noise. When the two instruments were connected in circuit, and the tone being transmitted from the transmitter, and the hollow box resting upon the poles of the magnet, the tone from the receiver could be distinctly heard above the din by a number of persons standing in the room. When the hollow box was separated slightly from the poles, the tone from it could be heard outside of the small room, — in the large one.

Int. 32. Which face of the box was held to or near the magnet, — the plain face or the perforated face?

Ans. The plain face.

Int. 33. When the box was held off from the magnet, how was it supported in that position?

Ans. Sometimes by holding the box in one hand and the magnet in the other, and moving them nearer or farther apart, letting the hands rest upon each other to prevent the two from touching; and sometimes by placing upon the heads of the magnet a piece of wood or rubber or other substance, and resting the box upon that, which would keep it separated from the poles the required distance.

Int. 34. Returning for a moment to the revolving drum receiver which you described yesterday, was this ever used by Mr. Gray or under his directions, to your knowledge, with an induction coil? If so, will you state when first, and where it was, and describe the arrangement used and the manner of its use?

Ans. It was used with an induction coil, the primary wires sometimes being attached to the line wires, — *i. e.*, the wires extending between the transmitting and receiving stations, — and sometimes the secondary wires so attached. The revolving drum, when the line wires were attached to the primary wires of the coil, would be

2864

attached to the secondary wires; and when the line wires were attached to the secondary wires of the coil, the revolving drum would be attached to the primary. In this case, the current reproducing the tone between the plate of the drum and the hand would be an induced current. The first time I remember of its being so used was in the month of March, 1876, in Philadelphia. It may have been so used before, but I do not now recall it.

Int. 35. Coming now to the fifth form of receiver which you mentioned in your twentieth answer as having been used to receive the single tone over the closed circuit from Gray's First Single Tone Transmitter, namely, a concave metallic diaphragm, will you state when and where such receiver was first made and used to your knowledge, and by whom was it made and by whose directions?

Ans. It was made in the month of July, 1874, at the works of the Western Electric Manufacturing Company, by a man in their employ by the name of Rand, under my direction, in pursuance of instructions from Mr. Gray; and the first time it was used with the single tone transmitter was at the works of the Western Electric Manufacturing Company during the same month.

Int. 36. Will you describe the apparatus which you have just referred to as the magnet receiver with concave metallic diaphragm, and the manner of its use, and produce it or a *fac-simile* of it?

Ans. It consisted of an electro-magnet, mounted upon a standard which was fastened to a wooden base in combination with an iron pan forming said concave diaphragm, also mounted upon a standard fastened to the wooden base spoken of, in such a manner that the poles of the magnet were in the bowl of the pan, and so arranged, that with an adjusting screw the poles of the magnet could be placed in contact with the bottom of the pan or diaphragm, or separated from it; an additional brace was attached to the m gnet, or standard holding the magnet, for supporting the upper rim of the pan, said brace being sometimes used and sometimes removed entirely; the wires from the coil of the magnet were attached to binding posts, also fastened to the base. When in use for receiving tones, the line wires were connected to the binding post, forming a continuous circuit through the transmitting and receiving magnets and battery.

2865

There is here present the original instrument made as I have described, and also a *fac-simile* thereof, which I have caused to be made at the request of the counsel for the defendant.

[*The fac simile instrument referred to is put in evidence for the defendant, and marked "Defendant's Exhibit Gray's Concave Metallic Diaphragm Magnet Receiver, W. C. W., Ex'r," the original instrument referred to by the witness being subject to inspection and comparison with the fac-simile as may be desired by the counsel for complainants at any time during the preparation or hearing of the cause.*]

Int. 37. Was the original instrument just above referred to taken to Europe by Mr. Gray? If so, when?

Ans. It was; in the month of August, 1874.

Int. 38. I wish now to direct your attention particularly to the use by Mr. Gray, or under his direction, prior to his going abroad in August, 1874, of the two receiving instruments represented respectively by "Gray's Resonant Box Magnet Receiver" and "Gray's Concave Metallic Diaphragm Magnet Receiver." You have spoken of both of these receiving instruments as used prior to August, 1874, in connection with Gray's first single tone transmitter in a closed circuit. If other transmitting instruments were made and used by Mr. Gray, or under his direction, prior to August, 1874, for the electrical transmission of musical tones received upon either of the receiving instruments mentioned in this question, please describe these several transmitting instruments in the order in which they were produced and used, and the nature of the circuit which was maintained between the transmitter and the receiver; and produce such transmitting instruments, if you can, or true reproductions of them.

Ans. In May, 1874, there was constructed, after a variety of experiments, a musical instrument or transmitting melodies. It was constructed substantially upon the plan of the single tone transmitter before alluded to. It was a combination of eight single tone transmitters in one instrument. The connections differed from the single tone transmitter in that when the keys were open or up, the line wire and battery wire were both open. There was a key for each reed, answering to the key of a cabinet organ. When one key was

2866

closed, the reed, and magnet connected with it, operated in exactly the same manner that the single tone transmitter did.

In the month of July, 1874, another instrument was made, consisting of two octaves of reeds with semitones. The first instrument spoken of consisted of eight reeds, representing the diatonic scale; the second instrument was like the first, except the addition of more reeds and keys. One other difference: instead of using a magnet for each reed, in the second instrument two reeds, and in one case three reeds, were placed upon the magnets. The connections were the same in both instances. During that same month, July, 1874, two additional single tone transmitters were made, one exactly like the reed and magnet in the first musical transmitter; the other, similar, but with primary and secondary wires wound upon the magnet, forming an induction coil. The single tone transmitters were in closed circuits when used. All the transmitters I have described in this answer were used in connection with the two receivers mentioned in the question before Mr. Gray went abroad in August. Except as I have specified, the single tone transmitters were similar in construction to the first single tone transmitter mentioned by me. I have here the two single tone transmitters made in July, 1874, if it is desired to examine them. I have also the two octave transmitting instrument I have described. The single octave transmitting instrument is in Chicago.

[*The two-octave instrument produced by the witness is put in evidence for the defendant, and marked "Defendant's Exhibit Gray's Two-octave Transmitter, W. C. W., Ex'r."*]

Int. 39. For what purpose were the two multiple transmitters (the single octave and the double octave) designed and used? and for what purpose were these single tone transmitters, made in July, 1874, designed and used?

Ans. The two multiple transmitters, single and double octave, were made for the transmission of melodies. The two single tone transmitters were made to show how tones could be used for telegraphic purposes or messages.

Int. 40. And were the two sorts of instruments used for these respective purposes, in connection with the resonant box receiver

and the concave metallic diaphragm receiver, before Mr. Gray went abroad in August, 1874?

Ans. They were.

Int. 41. Will you now state on what occasions and to what extent and with what results such uses were made by or under the direction of Mr. Gray before he went abroad in August?

Ans. The first multiple transmitter was not used by me, I believe, in connection with either of these receivers, but was sent to New York and exhibited there in connection with Gray's resonant box magnet receiver by Mr. Gray, in the month of May or June, or both, 1874. The second multiple transmitter (two octaves) was tested at the works of the Western Electric Manufacturing Company, in connection with both forms of receiver spoken of (the resonant box and concave diaphragm), in the month of July, 1874, and exhibited during the same month, in Chicago, between the office of Gen. Stager, superintendent of the Western Union Telegraph Company, Chicago, and the works of the Western Electric Manufacturing Company, of Chicago. The distance of the two instruments apart was about three quarters of a mile, the receiver being at the office of Gen. Stager and the transmitting instrument at the other end. The two single tone transmitters were experimented with in connection with both forms of receivers at the works of the Western Electric Manufacturing Company, but not exhibited, to my knowledge, except as people came in while being experimented with and seeing them.

Int. 42. Referring particularly to the exhibition of the double octave multiple transmitter with the resonant box receiver and concave diaphragm receiver in July, 1874, between Gen. Stager's office and the works of the Western Electric Manufacturing Company, state, as nearly as may be, how many persons witnessed this exhibition, naming such of them as you can, first stating whether the exhibition was public or private.

Ans. I do not know whether it was a public or a private exhibition, nor what persons were present, and I don't know but I ought to add which of the receiving instruments, if either, was used, I being at the transmitting end, three quarters of a mile away.

Int. 43. As regards the demonstration which took place previ-

2868

ously, at the works of the Western Electric Manufacturing Company, did you assist in that, and if so, at which station?

Ans. I did assist in that, principally at the transmitting station, occasionally changing to the receiving station.

Int. 44. Was this demonstration conducted between the same two rooms you mentioned before when speaking of the first single tone transmitter, or between other points in the shop?

Ans. In both places, — in the rooms spoken of previously, and in the same room, with instruments near together.

Int. 45. Can you name any persons who witnessed these demonstrations at the shop?

Ans. I can name persons that I feel very positive were there: Mr. E. M. Barton, secretary of the Western Electric Manufacturing Company; Mr. N. G. Kellog; Charles Lewis, foreman of the shop. Those are all the names I would specify; but there were fifty to one hundred men employed there who could have seen it, and probably many of them did.

Int. 46. Please state the result of the demonstration had at that time, with the apparatus you have referred to.

Ans. The result was satisfactory; so much so that the apparatus was shipped to London, England, to exhibit to certain scientific men there.

Int. 47. In this demonstration at the Western Electric Manufacturing Company's shop, in what, if any, different ways were the resonant box and the concave metallic diaphragm used as regards contact with, or proximity to, the magnet; and with what comparative result as to distinctness of hearing or reproduction of the tones, whether as regards a comparison of the two forms of receiver with one another, or as regards the comparison of different positions relatively to the magnet to which either was adjusted?

Ans. The instruments were used sometimes with the magnet in contact with resonant box and concave diaphragm and also at various degrees of distance apart. Distinctness of hearing, or reproduction of the tones, was better when the box and concave diaphragm were separated from the magnet. I do not know that we tried to determine which form of receiver was the best for reproduction of the tone or hearing. The concave diaphragm magnet receiver was the

2869

most convenient form for using, as it could be adjusted and would remain adjusted so that it could be used a second time without having to stop to adjust.

Int. 48. How far from the resonant box or concave diaphragm could you stand and hear distinctly the tone transmitted to it and received by it in the demonstration you are describing?

Ans. I don't know how far we could have heard the sounds; we did stand about the receiving instrument, perhaps about three to ten feet from it, and heard it distinctly.

Int. 49. Was there any difference that you noted or remember between the resonant box and the concave diaphragm as to the distinctness of hearing under similar relations of the two things to the magnet, — similar proximity?

Ans. I do not remember now a comparison of the two instruments in that respect. I mean the result of any comparison that may have been made, if any was made, which I do not remember.

Int. 50. You have said that Mr. Gray went abroad in August, 1874. Did you go with him?

Ans. I did.

Int. 51. What instruments did you and he take with you?

Ans. The two-octave multiple transmitter, the two single tone transmitters made in July, the violin animal tissue receiver, the concave diaphragm magnet receiver; these, I think, were all the instruments that we took.

Int. 52. State what, if any, exhibitions of these instruments and their operation in circuit for receiving and transmitting musical tones were made by you and Mr. Gray, or by him in your presence, while you and he were in Europe?

Ans. The instruments were unpacked in the office of Warden, Muirhead & Clark, Regent Street, London, in September, 1874. The multiple transmitter, with one or more receivers, was connected in circuit and exhibited to members of the firm, melodies being transmitted from one room and received in another. Afterwards, during the same month, the apparatus was removed to the office of Latimer Clark, No. 6 Victoria Chambers, London, and exhibited there to him; afterwards parts of it were taken to the laboratory of Prof. Tyndall, at the Royal Institution, London, and

exhibited to him about the 1st of October, 1874. It was afterwards taken back to the office of Latimer Clark, and exhibited to such of his friends as he invited in.

[*Adjourned to March* 24, 1879, *at* 10.30 A. M.]

NEW YORK, March 24, 1879, 10.30 A. M.

Int. 53. What was the business of Warden, Muirhead & Clark, and what was their standing in that business in 1874, in England?

Ans. They were manufacturers and dealers of nearly all forms of telegraphic supplies, and I believe one of the largest firms in the business.

Int. 54. State, as nearly as may be, how frequently and with what degree of publicity the exhibitions of those instruments were made at the office of Warden, Muirhead & Clark, at Regent Street, and at the office of Mr. Clark, in Victoria Chambers?

Ans. At the office of Warden, Muirhead & Clark, I think the exhibition was only witnessed by members of the firm, and perhaps one or two persons in their employ. I do not remember how many times, but the apparatus was in condition for exhibition several days; at the office of Mr. Clark, in Victoria Chambers, the apparatus remained in working order two or three weeks, — perhaps more, — I don't remember exactly, and was exhibited to as many of his friends and as often as he desired.

Int. 55. In your last answer you used the expressions "in condition for exhibition" and "in working order": what do you mean by these expressions?

Ans. The instruments were connected with battery, and with line, and with each other, and could be used at a moment's notice.

Int. 56. You say, "The multiple transmitter, with one or more receivers, was connected in circuit," etc.: what receivers do you there refer to?

Ans. I do not mean by that that there were two receivers in the line at once. I should have said, perhaps, one or other of the receivers was so connected.

Int. 57. Were all the receivers which you took out with you exhibited at one time or other in circuit with the multiple transmitter?

Ans. I cannot swear that they were, as I was at the transmitting end of the line, and could not tell positively which receiver was being used.

Int. 58. You say that parts of the apparatus were taken to the laboratory of Prof. Tyndall and exhibited to him: what parts were these?

Ans. The multiple transmitter, the violin animal tissue receiver, and, I think, the concave diaphragm magnet receiver, and the paper drum receiver which we had made in England.

Int. 59. When did you and Mr. Gray return to this country, and what did you do with the apparatus before leaving England?

Ans. We left England for home the 8th of October, I believe, 1874; before leaving, the apparatus was taken to the office of Warden, Muirhead & Clark, and arrangements made with them for shipping it to this country.

Int. 60. State, if you know, when the apparatus next came into the possession of Mr. Gray; and state all you know of your own knowledge in regard to its detention from his possession in the mean time.

Ans. I did not see the apparatus after leaving England until some time in the fall of 1875. I know very little of the causes of detention; I understood it was through some informality with regard to the custom house.

Int. 61. Did you finally receive them in the fall of 1875, at Chicago?

Ans. I did.

Int. 62. All which were sent out to England?

Ans. Yes, sir.

Int. 63. After the multiple transmitter and concave diaphragm receiver so came into your possession again at Chicago, what was their history with reference to the place where and manner in which they were preserved, and with reference to any use made of them at Chicago or elsewhere for any purpose?

Ans. They were kept at the works of the Western Electric Manufacturing Company with other apparatus which we had stored there. The multiple transmitter was used as an exhibit in a suit of interference between Mr. Gray and Edison, and sent to Washington as

2872

such exhibit, in May or June, 1877. The concave diaphragm receiver remained in the storeroom in Chicago until sent to New York for uses in this case. The multiple transmitter was finally returned to Chicago from Washington, and also brought to New York for uses in this case.

Int. 64. Was there more than one resonant box magnet receiver like the exhibit of that name made in Chicago for Mr. Gray, and before he went abroad in 1874?

Ans. There were two of them made.

Int. 65. State what was the history of each.

Ans. One was sent to New York and exhibited there in connection with the first eight-tone transmitter, in May or June, 1874, and left there, I believe. The other was sent to Washington as a model in a patent case.

Int. 66. Do you mean as a model accompanying an application for a patent?

Ans. I do.

Int. 67. What patent?

Ans. The magnet receiver patent, I believe it is called, No. 166,095, July 27, 1875.

Int. 68. You described, last Saturday, certain tests which were made of the resonant box receiver with the first single tone transmitter in closed circuit, the operations being performed on premises of the Western Electric Manufacturing Company, the transmitting instrument and the receiving instrument being in separate rooms from eighty to one hundred feet apart. I believe you have not said and I will ask you now to say, whom, if any one, you can name, besides Mr. Gray and yourself, who witnessed this exhibition.

Ans. I cannot definitely state who did witness it, but think E. M. Barton and Mr. M. G. Kellog were present, and probably others.

Int. 69. Was the exhibition conducted openly for the observation of any who desired to see it, or was it privately?

Ans. It was not private in any sense.

Int. 70. In speaking of this same exhibition or demonstration, you describe the manner in which the resonant box was supported when it was held near to but not touching the magnet poles, and this you said was "sometimes by placing upon the heads of the mag-

net a piece of wood or rubber, or other substance, and resting the box upon that." This description is, perhaps, not entirely clear. Will you state what you mean by the heads of the magnet and how the pieces of wood, etc., were made to properly support the box?

Ans. By heads of the magnet, I mean the hard rubber disks that form the end of the spool through which the magnet poles project. When the resonant box was supported by pieces of wood or other substances they were placed upon the rubber end of the spool near the outer edge and on opposite sides, the box resting upon them.

Int. 71. Have you here and will you produce a diagram model, representing Gray's first single tone transmitter and its battery connections and the magnet receiver, and explain its operation of transmitting the tone through a closed circuit?

Ans. Yes; I have. [*The diagram model produced is put in evidence for the defendant, and marked "Gray's Closed Circuit Single Tone Transmission Apparatus, W. C. W., Ex'r."*] The single tone transmitter is represented and marked with letter A, the magnet receiver with the letter B, the battery by C, a key in short circuit by D; and in this model, instead of two wires representing line and return, the return is represented by ground connections marked E and E′, and the line by F′. When the key D is opened the battery current is through transmitting magnet A and line F and receiving magnet B to the ground plates back to battery. When the key D is closed the current passes through the transmitting magnet A to a point represented by G, where it divides, a portion going over the line F and receiving magnet B and ground plates back to battery, the rest passing through the core of the transmitting magnet A to the spring or reed, and when in contact with the screw (shown in the model in contact with it), through it to the key back to battery. When the spring spoken of is in contact with the screw, most of the battery current is through the short circuit, making the transmitting magnet very strong, thereby attracting the spring toward the magnet and away from the screw, which sends all of the current over the line, which has the effect of weakening the power of the transmitting magnet and allowing the spring or reed to fall back against the screw, which operation alternates or changes the power of the current upon the line.

2874

Int. 72. Did you, after your return from Europe, make an apparatus, and for what purpose, such as is shown in Gray's Tuned Bar Receiver Patent, No. 166,094; and if so, how soon after your return?

Ans. I made, or had made, such an instrument as is described in Gray's Tuned Bar Receiver Patent, in the month of November or December, 1874, for the purpose of analyzing or responding to a particular tone or vibration sent from the transmitting station either alone or with others.

Int. 73. At this time did you have such an instrument at both the receiving and transmitting stations of the line?

Ans. The instruments were alike in form at the two ends, but differently connected, and were not interchangeable.

Int. 74. During this winter of 1874 and 1875, did you have occasion for a multiple transmitter similar to that heretofore mentioned? If so, what did you do, the multiple transmitter sent from England being at that time detained in the custom house as you have said?

Ans. I had another one constructed with the same number of tones (two octaves with semitones).

Int. 75. When was this done? And if an apparatus was at the time constructed which this multiple transmitter worked in connection with, will you explain the whole apparatus and its arrangement and purpose and operation, producing such representations of it as would be convenient for the purpose of explanation?

Ans. This multiple transmitting instrument was made or completed in December, 1874, and about the same time, during the same month, a new form of magnet receiver was made, which had, in the place of the spring or reed, a plate of iron about three inches in diameter, octagon in shape; said magnet and plate combined mounted upon a hollow wooden box for resonance. *This* [*producing an instrument*] is the identical box and magnet spoken of; the thin octagonal plate of iron not now being mounted with it, but replaced by a different piece of iron, oblong in shape. The original octagonal plate I also have, and produce it. There were five of such plates and magnet receivers made at the same time, four of which magnets and plates were mounted upon resonant boxes, the other mounted upon three legs and used in different ways.

[*The instrument produced by the witness is put in evidence for the defendant, and marked "Gray's Wooden Sounding Box Magnet Receiver, W. C. W., Ex'r," and the octagonal plate produced by the witness is put in evidence for the defendant, and marked "Gray's Octagonal Plate, W. C. W., Ex'r."*]

In regard to this combination of magnet and octagonal iron plate, I would add that when a strong battery current was used, the iron plate would sometimes be attracted and held firmly to the magnet. To prevent it we sometimes used a little brace of wood placed between the two coils of the magnet, one end touching the octagonal plate, the other touching the cross-bar or heel iron of the magnet, and sometimes a piece of rubber or other substance would be placed between the plate and rubber head of the magnet at that side of the plate which was free from the magnet.

Int. 76. What was the object of providing the means of greater resonance which you have described as appertaining to this apparatus, and what use was made of the apparatus organized as you have described?

Ans. The object was to have the tone or tones reproduced loud enough to be heard in a large hall; and the use made of it at that time was an exhibition to the public in a church in Highland Park, Illinois, during the last week of December, 1874.

Int. 77. Did you afterwards make or assist in making for Mr. Gray a modification of one of the magnet receivers you have described, with a view to the telegraphic transmission of messages over long lines? If so, please say when it was, and describe it, and produce it, or a representation of it.

Ans. I made, or had made, such modification as spoken of in the question for the purpose of a long line test, and have part of the original instrument here, which consists of a tin cup or dipper, with a cover of wood, upon which is mounted an electro-magnet in such a manner that when the cover is in place upon the dipper or box, the magnets are inclosed in the box, the poles of which magnet are nearly touching the bottom of the box. Upon the wooden cover of the box are mounted two binding posts, with which the wires from the magnet coil are connected. In the bottom of the box some holes are drilled for the purpose of letting out the sound. The binding post upon

2876

the side of the dipper or box was put on for a handle, into which sometimes was screwed a wooden handle.

Int. 78. Will you produce the instrument which you described in your last answer as illustrating the apparatus inquired about, and state what parts of it are the original parts, and what parts are a reproduction of the original parts?

Ans. I do produce it. [*The instrument produced is put in evidence for the defendant, and marked "Diaphragm Box Magnet Receiver, W. C. W., Ex'r."*] The tin box or dipper as it stands is the original part. The cover, magnet and binding posts are reproductions of the original.

Int. 79. Explain how you used this instrument.

Ans. This instrument was used in connection with a transmitting instrument upon a telegraph line between Chicago and Milwaukee, near the middle of February, 1875; and the manner of its use is represented by the diagram model marked "Gray's Closed Circuit Single Tone Transmission Apparatus."

Int. 80. When the apparatus was in operation, how was the receiver held for the purpose of receiving the transmitted tone?

Ans. I was not at the receiving end and did not see it used. It could have been held in the hand and applied to the ear, or it could have rested upon a table.

Int. 81. In the latter case, which side should be uppermost, and in the former case, which side should be applied to the ear?

Ans. When resting upon a table, it could be placed upon its side or rested upon the cover and binding posts, the perforated tin diaphragm being outermost. When applied to the ear, the perforated tin diaphragm was towards the ear.

Int. 82. Have you since that time used it yourself in either, and which of the two ways you have mentioned?

Ans. I have in both ways.

Int. 83. You have said that this instrument was used in connection with a transmitting instrument upon a telegraph line between Chicago and Milwaukee, near the middle of February, 1875, under such an arrangement, as I understand you, for transmitting and receiving as shown in the diagram model marked "Closed Circuit Sin-

gle Tone Transmission Apparatus." At which station were you, and who was at the other station?

Ans. I was at the Chicago end of the line with the transmitting instrument, and Mr. Gray was in Milwaukee with the receiving apparatus.

Int. 84. To what extent was this telegraphing operation with this apparatus carried on; and whether publicly or privately, and with what result?

Ans. It was used the greater part of one afternoon, say from three o'clock or half past two to six o'clock. It was not a private exhibition, as the transmitting instrument was in a room occupied by fifty or more telegraph operators, all of them probably having a look at it. I can't answer as to the other end, but think it was as public as the transmitting end. The results, I think, were satisfactory.

Int. 85. When you were describing Gray's wooden sounding box magnet receiver, you said that it was provided with an octagon shaped plate under the magnet poles in place of the oblong metal bar which is now in the exhibit. When was an instrument first used by Mr. Gray with the oblong bar as now appears in the exhibit?

Ans. I do not remember the date of its first use; it was in the spring or summer of 1875.

Int. 86. In the case of the multiple transmitters which were made before you went abroad and directly after your return, how was the intensity or volume of the tones received affected by sounding two or more tones simultaneously upon the transmitter, after the manner of the musical chord, as compared with sounding one tone by itself?

Ans. The volume of the tone or tones was very much less when two tones were being transmitted than when only one was sent.

Int. 87. To what was this difference due, and what change, if any, was afterwards made in the transmitting apparatus or its connections, in order that each tone of a chord should have a volume equal to that of one tone sounded separately?

Ans. It was due to the fact that when two tones were being transmitted, the battery current was divided, part being vibrated by one reed, the rest by the other. When one tone alone was being sent, it vibrated the entire battery current. The change made to

2878

get the same volume for each tone was a change in the manner of connecting the battery, so as to give to each vibrating reed a proper proportion of the battery. In this method of connecting up, no one reed can vibrate the whole battery current.

Int. 88. Is the arrangement of the battery you have referred to, for the purpose of producing a number of tones simultaneously, shown in any of Mr. Gray's patents? If so, which?

Ans. It is shown in two of them. In the patent, No. 175,971, "Sounding Box Receiver Patent," it is shown for transmitting and receiving two tones; and in the patent, No. 186,340, "Closed Circuit Patent," it is shown for transmitting and receiving six tones.

Int. 89. When first did Mr. Gray have and use an apparatus in which a multiple transmitter capable of sending a number of tones simultaneously, each of the volume of one tone sounded separately, and with such multiple transmitter, a bar of metal opposite the poles of the magnets, as shown in the sounding box exhibit, and with the circuit constantly closed and the magnet constantly charged?

Ans. The first I remember of such use was in September, 1875. He had the apparatus and could have used it then, and perhaps did a month or more earlier.

Int. 90. What, if anything, did you have to do with the making of this apparatus embodying the combination you have described?

Ans. I superintended the construction of it. It was made at the works of the Western Electric Manufacturing Company, in Chicago.

Int. 91. In which one, if either, of Mr. Gray's patents is the apparatus you have mentioned represented?

Ans. In Mr. Gray's patent, No. 205,378, marked "Gray's Common Receiver Patent."

Int. 92. In this apparatus, was the composite tone which was transmitted by sounding a chord, for instance, upon the transmitter, delivered to the ear at the receiving end in corresponding composite form?

Ans. It was.

Int. 93. Why was not this result hindered by the sound of the fundamental tone of the oblong bar in the receiver?

Ans. Because the fundamental tone of the receiver was probably very much lower in pitch, or slower in rate of vibration, than the

tones transmitted, for one thing, and not being one of the tones transmitted.

Int. 94. Was an experimental use made of this apparatus at or about the time of its completion? and where, and to what extent, and with what results?

Ans. In my answer to the eighty-ninth question I speak of the first use I remembered of this combination. In September, 1875, in New York, in the Western Union building, the apparatus was set up and connected in the manner spoken of, and exhibited to a number of people.

Int. 95. On this occasion, were a number of telegraphic messages sent simultaneously through the medium of simultaneous musical tones? and if so, how many, and how distinguished or resolved at the receiving end?

Ans. There were four messages transmitted simultaneously, and received by four persons, who wrote them down as they received them, each person selecting a tone and copying the message sent by use of that particular tone.

Int. 96. When and where did you first see such an instrument as is now commonly called the Loven's telegraph, and will you describe it?

Ans. I first saw this instrument in December, 1875, in Milwaukee, Wisconsin; it consisted of a short tube, or rather two short tubes, with a diaphragm stretched across one end of each, the diaphragm being a thin piece of skin or parchment, and having a strong thread fastened to the centre of each diaphragm, the thread being about twenty or thirty feet long. When used, the thread between the two diaphragms was stretched tightly, and upon a person speaking into one tube, the person holding the other by listening at the tube could hear and understand the spoken words, even if spoken in a whisper.

Int. 97. State, if you know, when the Patent Office model of the apparatus shown in Mr. Gray's "Printer Patent," No. 179,549, was made.

Ans. In the spring or summer of 1875.

Int. 98. State, if you know when the Patent Office model of the

2880

apparatus shown in Mr. Gray's "Double Bar Magnet Patent," No. 198,379, was made.

Ans. It was made in March, 1876.

[*Adjourned to March* 25, 1879, *at* 10.30 *A. M.*]

NEW YORK, March 25, 1879, 10.30 A. M.

Int. 99. Have you at any time, in Chicago, undertaken to use experimentally any of the receiving instruments mentioned in this deposition for the purpose of transmitting or receiving, or both transmitting and receiving, articulate speech? If so, please state the time when it was done, the instruments which were used, the conditions as to distance, etc., under which they were used, and the results obtained.

Ans. In October or November, 1878, in Chicago, at the works of the Western Electric Manufacturing Company, I connected up several of the receivers mentioned, namely, the resonant box magnet receiver represented by exhibit marked "Gray's Resonant Box Magnet Receiver"; the concave metallic diaphragm magnet receiver, represented by exhibit marked "Gray's Concave Metallic Diaphragm Magnet Receiver," and the diaphragm box magnet receiver, marked "Exhibit Diaphragm Box Magnet Receiver," in combination with an Edison transmitter; there was but one of the receivers in use at the same time. Upon speaking to the Edison transmitter, the sound of the voice, or the spoken words, was reproduced upon either of the above mentioned receivers. Substituting the diaphragm box magnet receiver for the Edison transmitter, and having the concave metallic diaphragm magnet receiver connected at the other end of the line, upon speaking to the diaphragm of either one, words were heard by listening at the diaphragm of the other distinctly. The resonant box magnet receiver was also used as transmitter or receiver, in connection with the other forms of receivers spoken of, and words spoken to it, or the diaphragm of it, were heard from the diaphragm of the concave metallic diaphragm receiver, or the diaphragm box magnet receiver. The distance between transmitting and receiving instruments was from fifty to one hundred feet, on different floors, there being no possibility of hearing what was said in one through the air in the other.

Int. 100. Who talked, when you listened, through these instruments, and *vice versa?*

Ans. Mr. M. G. Kellog and Mr. E. M. Barton.

Int. 101. Have you since the beginning of the present year assisted in certain experiments, conducted under the direction of Mr. Edward S. Renwick, relating to the telephonic transmission of articulate speech by means of the receiving apparatus mentioned in your deposition; if so, when and where were these experiments conducted?

Ans. I assisted Mr. Renwick in some experiments during the month of February, 1879, in New York City, at the shop of the Western Union Telegraph Company, superintended by Mr. G. M. Phelps.

Int. 102. In the course of these experiments did you use a receiver such as Exhibit Diaphragm Box Magnet Receiver? If so, state with what transmitter, with what battery power, and with what result.

Ans. Yes. The transmitter was an Edison carbon transmitter, the battery power sometimes being one cell (Callaud) and sometimes three, and sometimes six. Words spoken to the carbon transmitter were heard and understood by the person listening at the receiver.

Int. 103. Who was at the transmitting end?

Ans. I was for one, Mr. Glass, foreman of the shop, and Mr. Renwick also. I was sometimes at the transmitting end and sometimes at the receiving end.

Int. 104. In the course of the same experiments did you try with an Edison transmitter, a resonant box, square instead of round in form, but otherwise like that attached to the Exhibit Gray's Resonant Box Magnet Receiver, and, if so, with what results? Stating also whether the same persons were at the transmitting and at the receiving end, as in the case mentioned in your last answer.

Ans. Yes. A square tin box was sometimes used on the magnet in place of the round one, with equally good results, and, I think, used by the same parties.

Int. 105. In each case, as I understand you, whether with the square box or with the round box, the box rested on the poles of the receiving magnet?

2882

Ans. They did, while I was listening.

Int. 106. I understand you to say that, as between the square box and the round box, both used as just described, there was no difference either in the distinctness or in the loudness of the articulate sound proceeding from the receiving end, as regards what you, yourself, listened to. Am I right?

Ans. You are.

Int. 107. Comparing these two forms of resonant box receiver with the diaphragm box magnet receiver, which gave the better result, if either, and in what degree and in what respect better?

Ans. The diaphragm box magnet receiver gave the best results, being louder.

Int. 108. In the course of the same experiments, and with the same persons at the receiving and transmitting end respectively, as before, and with an Edison transmitter, did you try Gray's concave metallic diaphragm magnet receiver, and with what results?

Ans. We did, with results, as near as I remember, the same as with the diaphragm box magnet receiver. In my listening I was not endeavoring to compare the instruments, but to ascertain if I could understand spoken words.

Cross Examination by CHAUNCEY SMITH, Esq., *of Counsel for Complainant.*

Cross-Int. 109. You have spoken of various trials which you made with certain instruments which have been referred to as exhibits in the case or with the originals which the exhibits are designed to represent. Have you given a full account of all the trials which you witnessed of the original instruments or of the instruments representing the originals which have been produced in evidence?

Ans. No, sir.

Cross-Int. 110. Will you state what trials you witnessed of the various original instruments beyond those which you testified to in your direct examination, taking them in the order in which the exhibits were introduced in evidence?

Ans. Of the first two-tone transmitting instrument, marked

2788

"Gray's Two-tone Transmitter," referred to in my eighth answer, I witnessed no use of it other than that mentioned in the tenth answer. The next instrument referred to was a thin plate of metal mentioned in the eleventh answer. I do not know that the original plate has been used since the time mentioned in the eleventh answer. We had about the premises plates of various kinds of metal, and we used what happened to be convenient for the purpose. There were several oyster cans lying about, and my impression is that one was also used.

The next instrument in order is mentioned in the fifteenth question. I believe I have not spoken of any particular trial made with this instrument, but stated that I had used it with all the various forms of receiver.

Next the improved form of animal tissue violin receiver described in the twenty-first answer. This instrument has been used in a great variety of experiments. The original was sent to New York in May, 1874, and remained there, I think, about two years. While it was away, others were made like it and used in place of it, and when it came back I could not tell which was the original.

The next instrument put in evidence is mentioned in the twenty-third answer, and marked "Gray's Animal Tissue Revolving Plate Receiver." The original instrument has been used a great many times in experiment at the works of the Western Electric Manufacturing Company, and exhibited publicly. I cannot name all the trials I witnessed.

The next instrument is described in the answer to the twenty-eighth question, and is marked "Paper Drum Receiver." The original was used but a short time, and was soon destroyed.

The next instrument is described in the answer to the twenty-ninth question, and is marked "Resonant Box Magnet Receiver," the original — there were two originals, one of which I have never seen used aside from the use spoken of in this twenty-ninth answer; the other was sent to New York in May, 1874, and I am not sure that I have ever seen it since.

The next instrument is described in the thirty-sixth answer, and marked "Concave Metallic Diaphragm Magnet Receiver." I think

2884

I have mentioned all of the trials I have witnessed with this instrument. If there are others, they do not now occur to me.

The next instrument put in evidence is referred to in the thirty-eighth answer, and is marked "Two-octave Transmitter." I think I have referred in my evidence to all the trials witnessed by me with the original instrument.

The next instrument put in evidence is referred to in the seventy-fifth answer, and is marked "Wooden Sounding Box Magnet Receiver." I do not recall any trial I witnessed of the original instrument other than I have mentioned in my evidence, unless it may have been some tests when it was first completed.

The next instrument put in evidence is referred to in the seventy-eighth answer, and marked "Diaphragm Box Magnet Receiver." I do not recall any trial with the original instrument other than I have mentioned.

Cross-Int. 111. In your answer to the eighth interrogatory, in reference to Gray's original two-tone transmitter, a duplicate of which you have produced in evidence, you say, "I made an instrument for the purpose of transmitting two tones simultaneously or singly over a telegraphic circuit, which circuit was closed": do you mean to be understood by this that that part of the transmitting instrument which produced the tones to be transmitted was included in a circuit which was constantly closed?

Ans. I do not.

Cross-Int. 112. Was there between that portion of the transmitting instrument to which I last referred and the receiving instrument an electric circuit connecting them, which was constantly closed?

Ans. There was not.

Cross-Int. 113. What, then, did you refer to in the answer which I have quoted as a telegraphic circuit, which circuit was closed?

Ans. To the secondary wires of the said transmitting instrument, in connection with the line and receiving instrument.

Cross-Int. 114. Was there a constant current flowing in this closed circuit?

Ans. There was not.

Cross-Int. 115. How did the breaks in the current in this circuit

correspond with the breaks in the current of the circuit connected with that portion of the transmitting instrument which produced the sound caused by the breaking of that circuit?

Ans. The impulses upon the secondary circuit were of the same rate exactly as those produced in the primary circuit.

Cross-Int. 116. Was this instrument, which you have produced in evidence as a duplicate of the original referred to in your eighth answer, made by yourself or under your direction?

Ans. Under my direction.

Cross-Int. 117. When was it made, and for what purpose?

Ans. It was made in October or November, 1878, possibly a little earlier, for use in this case.

Cross-Int. 118. How many instruments like this, or like the original, have been made in all, to your knowledge?

Ans. Three, including the original.

Cross-Int. 119. You speak of this as a duplicate of the original. Is it a duplicate in all respects of the original, including the dimensions of the cores of the magnets, the size and length of the wire, and the manner in which they are wound?

Ans. Probably the separate parts of this instrument are not exactly duplicates of corresponding parts of the original in point of dimension. The wire with which it is wound may not be exactly of the same length as the wires of the original. It was made from a Patent Office drawing of the original, and intended to be as near like the original as it could be made without having possession of the original, the original being in the Patent Office.

Cross-Int. 120. Can you give the particulars mentioned in the last question as to the original instrument?

Ans. I cannot give you the dimensions nor the length of the wires; the primary wire was wound first upon the coil, and the secondary wire upon that.

Cross-Int. 121. Can you give the same particulars in respect to the instrument which has been put in evidence?

Ans. Just the same.

Cross-Int. 122. State whether or not, in the induction coil in the instrument produced in evidence, the wires of the two circuits are of the same size, and what their lengths are relatively to each other?

2886

Ans. I cannot state positively whether there is a difference in size of the two wires, as I did not see the wire wound upon it, and the size cannot be ascertained from the outside. I suppose the primary wire to be larger than the secondary, as that is the customary way of winding induction coils. In regard to the length of the wire, we pay no attention to the length, instead of which we speak of it as of being certain resistance. In this case there is, probably, one or two ohms of resistance in the primary wire, and perhaps fifty ohms in the secondary. I do not remember the exact proportions.

Cross-Int. 123. You spoke of the original instrument being used in connection with the plate on which the tones of the transmitting instrument were reproduced. Was the reproduction of these tones the ultimate object of the use of the apparatus, or was there some other and further useful result to be obtained by it as you understood it?

Ans. I did not know whether there was any other object in view or not.

Cross-Int. 124. Did you ever see it used for transmitting words or messages from a person at the transmitting instrument to a person at the receiving instrument?

Ans. I did not.

Cross-Int. 125. You have produced an exhibit marked "Defendant's Exhibit, Gray's Resonant Box Magnet Receiver," as representing an original instrument, if I understand you, made in 1874: will you state whether or not the magnets and box are identically like the original instrument in respect to the dimensions of the parts, including the size and length of the wires?

Ans. I presume they are not identically like the original, as I understand the word.

Cross-Int. 126. Do you remember what the dimensions of the original were?

Ans. Not exactly.

Cross-Int. 127. Will you state as near as you can what the dimensions were, including the size and resistance of the wire?

Ans. I think the iron cores were a little less than half an inch in diameter, and about three inches long. The wire upon them measured about forty ohms in resistance.

Cross-Int. 128. Do you remember whether that original electro-magnet was constructed especially for use in connection with the single tone transmitter with which it was used, or was one manufactured by the company for sale or for use for other purposes?

Ans. We found a magnet such as was used by the company for instruments of their construction, and adapted it to this purpose.

Cross-Int. 129. What adaptation did it require?

Ans. Mounting it upon a wooden base with binding posts, as represented by the exhibit?

Cross-Int. 130. Do you remember also whether you found the box which was used in connection with it or made one especially for it?

Ans. I had two boxes made especially for the purpose.

Cross-Int. 131. And were these boxes of the same dimensions as that which you have produced as a part of the exhibit?

Ans. They were not, exactly.

Cross-Int. 132. In speaking of the use of the original instrument in connection with the single tone transmitter. I understand you to say that you reproduced the tones of the transmitting instrument: did you understand that a reproduction of such tones was the ultimate object of the apparatus, or that it was designed to be used for attaining some other and further object?

Ans. I was not aware of any other object at that time.

Cross-Int. 133. Was that true also of the use of the instrument in connection with the original concave metallic diaphragm receiver which you have produced?

Ans. At the time it was produced it was.

Cross-Int. 134. When did you first become aware, if ever, of any further use which was to be made of these instruments?

Ans. In the winter of 1874 and 1875, in experiments with similar instruments, we were led to believe that they could be used as receivers for the human voice.

Cross-Int. 135. By the use of the single tone transmitter in connection with which they were used?

Ans. No, sir.

Cross-Int. 136. Was any effort made to use them as receivers for the human voice?

2888

Ans. No, sir.

Cross-Int. 137. Did you know of Mr. Gray's contemplating the use of these receivers in connection with the single tone transmitter which you have described, or in connection with an instrument like the Exhibit Gray's Two-tone Transmitter, for transmitting messages or intelligence from a person at the transmitting instrument to a person at the receiving instrument?

Ans. I understood that that was the object of the invention, to transmit messages from one person to another.

Cross-Int. 138. In what way?

Ans. By the use of the tone or tones transmitted and received telegraphically, by breaking the tone or tones into short and long sounds corresponding to the dot and dash of the Morse alphabet.

Cross-Int. 139. Did you ever, in the use of the single tone transmitter in connection with the electro-magnet, of which a representation is given in Exhibit Gray's Resonant Box Magnet Receiver, use the electro-magnet alone for reproducing tones?

Ans. I did.

Cross-Int 140. And with what result?

Ans. I heard the tone plainly.

Cross-Int. 141. Did you not know before you went to England that Mr. Gray contemplated the use of transmitters like Exhibit Gray's Two-tone Transmitter, in connection with an electro-magnet alone for transmitting two telegraph messages simultaneously?

Ans. No, sir.

Cross-Int. 142. When, if ever, did you first learn that he contemplated the use of the apparatus mentioned in that way?

Ans. I don't know that I ever learned it.

Cross-Int. 143. Did you ever know of his contemplating the transmission of two messages simultaneously by any means; and if so, by what means?

Ans. I did; by the means of an electric current thrown into vibration by reeds differing in pitch, and receiving the results of such vibrations of current upon instruments capable of responding to such vibration, receiving the two or more tones upon a single receiving instrument, or upon separate instruments designed for responding each to a particular tone.

Cross-Int. 144. When did you first know that?

Ans. I first knew of his contemplating accomplishing this result in April or May, 1874.

Cross-Int. 145. What instruments did you first know of by which this result was to be obtained, or sought to be obtained?

Ans. The two-tone transmitter, represented by exhibit so marked, and the resonant box magnet receiver, represented by exhibit so marked.

[*Adjourned to March* 26, 1879, *at* 10.30 *A M.*]

NEW YORK, March 26, 1879, 10.30 A. M.

Cross-Int. 146. What batteries did you use in the various trials or experiments which you have mentioned in connection with the several receivers?

Ans. I think we used three different forms, — Calland or gravity battery, Grove battery and carbon battery; sometimes using but one cell, and at other times a number of them, — just how many I do not remember.

Cross-Int. 147. Will you give me the data as to the electro-magnet used in connection with the concave metallic diaphragm receiver, and also as to that used in connection with the diaphragm box magnet receiver?

Ans. I have here the original instrument, — concave metallic diaphragm receiver, — which can be examined as to its resemblance to the exhibit. The cores of the magnet are about half an inch in diameter, and about four inches long, — perhaps a little more. The resistance of the wire upon the magnet I do not remember. I think the resistance is in the neighborhood of one hundred ohms, — it may be more or less. The magnets of the diaphragm box receiver had cores of about an inch and a half in length and a quarter of an inch in diameter, and I think the wire upon them had from one to two hundred ohms resistance.

Cross-Int. 148. Will you give the same data in respect to the electro-magnet of the first single tone transmitter, parts of which you have put in evidence?

Ans. The cores of the magnet were about an inch and a half

2890

long and a quarter of an inch in diameter, the wire upon them measuring two or three ohms.

Cross-Int. 149. Was this original transmitter constructed specially for the experiments which you made with it?

Ans. The magnet was an old one, but the combination with the spring and contact screw was arranged especially for the experiments we made with it.

Cross-Int. 150. Had you, before the construction of either the first two-tone transmitter or the first single tone transmitter, seen instruments used for interrupting a current by means of a spring and a contact point arranged as they were in the two original instruments referred to?

Ans. I had.

Cross-Int. 151. Will you explain how the breaking of the short circuit in the first single tone transmitter operated to change the strength of the magnetism of the electro-magnet of the receiving instrument?

Ans. The make and break of the short circuit operated to induce a current of electricity in the secondary wire, which charged the magnet as many times per second as the make and break occurred.

Cross-Int. 152. Were there two coils in the electro-magnet of that transmitting instrument, — a primary one and a secondary?

Ans. I answered your question with reference to the two-tone transmitter. I see now that it was limited to the single tone. Speaking now of the single tone transmitter, by breaking or opening the short circuit, the entire current from the battery passed over the line through the receiving magnet, charging it strongly. When the short current was closed, a large portion of the battery current was drawn through the short circuit, leaving but a small portion upon the line, which would reduce the strength of the receiving magnet. Another effect was produced by this breaking of the short circuit, — an extra current was induced upon the line, which aided in charging the receiving magnet.

Cross-Int. 153. What was the strength of the current derived from these two sources when the short circuit was broken as compared with that arising from the battery alone when the short circuit was closed?

Ans. The instant of the break the current was much stronger than the battery current alone. The comparison I have never made.

Cross-Int. 154. What difference was there in the action of the first two-tone transmitter, when only one key was used, and the action of the single tone transmitter in producing sounds on the same receiver, with the same strength of battery current?

Ans. The two-tone transmitter induced a current of electricity in the secondary wire line and receiving magnet. The single tone transmitter alternated the power of the battery current upon the line and through the receiving magnet, and induced a current also upon the line and through the receiving magnet.

Cross-Int. 155. As to the sounds produced by the receiver, what difference was there when the springs which broke the current in the two instruments vibrated at the same rate?

Ans. When the single tone transmitter was used, the reproduced tone would be louder than when one tone from the two-tone transmitter was reproduced.

Cross-Int. 156. Was this difference in the loudness of the tones due to a greater difference in one case than in the other between the maximum and minimum strength of the magnetism of the electro-magnet of the receiver during the vibration of the circuit breaking spring?

Ans. I think it was, partly, but there were other conditions which I cannot explain, but can be explained by an electrical expert; as, for instance, the matter of quickness of charge and discharge of the magnetism of the receiving magnet in the two cases.

Cross-Int. 157. In the use of these two transmitters, if I understand their operation, the change in the strength of the current, by virtue of which sounds were produced in the receiving instrument, took place when contact was made or broken between the vibrating spring and the contact point which is shown in the exhibits: am I correct in this?

Ans. That is correct.

Cross-Int. 158. Did the springs exert any influence upon the currents during their movement after their contact with the contact point was broken, until they returned into contact again?

Ans. In regard to the two-tone transmitter, they did not; with

2892

regard to the single tone transmitter, the spring did exert some influence after contact with the point was broken while approaching to and receding from the transmitting magnet.

Cross-Int. 159. You have spoken of two instruments, two single tone transmitters, that were made after this first one, one of which had an induction coil and the other had not. Did these instruments operate respectively like the first two-tone transmitter, when one key was used, and the first single tone transmitter?

Ans. They did.

Cross-Int. 160. In your answer to the eighty-eighth interrogatory, you refer to a patent, 186,340, called "Close Circuit Patent," as showing, as well as another patent mentioned, a certain arrangement of batteries. If your answer is intended to convey the idea that there was a continuously closed circuit between the transmitting instrument and the receiving instrument, will you explain what the arrangement was, and state whether or not a current was continuously flowing between the transmitting instrument and the receiver?

Ans. The transmitting instruments were placed in such relation to portions of the battery that they could short-circuit said portions of battery without being themselves in the closed circuit.

Cross-Int. 161. How did this arrangement differ from that of the first single tone transmitter?

Ans. In that there was no magnet in the transmitter in this arrangement through which the current from the battery passed.

Cross-Int. 162. When was this arrangement first used by Mr. Gray?

Ans. In March, 1875.

Cross-Int. 163. State whether or not vibrating reeds were used to make and break the battery circuit, and if so, how such making and breaking operated to affect the receiving instrument?

Ans. Vibrating reeds were used to make and break a short circuit from a portion of the battery connected with such reed, in such a manner that when the reed and contact point were in contact, the larger part of the current from that portion of the battery was diverted from the line or closed circuit, through the short circuit spoken of; and when said reed and contact point were separated, the current from that portion of the battery returned to the line or closed circuit,

thereby alternating the effect of the current from that portion of the battery, upon the line and through the receiving magnet.

Cross-Int. 164. These changes in the strength of the current passing through the receiving instrument took place at the time when the contact was made or broken between the vibrating spring and contact point, did they not?

Ans. They did.

Cross-Int. 165. And the result was, if I understand it correctly, to increase and diminish the magnetism of the core of the electro magnet of the receiving instrument at regular intervals, corresponding with the vibrations of the spring, and by a constant amount?

Ans. Yes, sir.

Cross-Int. 166. At the commencement of the cross examination, I asked you to give an account of any trials which you had witnessed other than those spoken of in your direct examination of the original instruments which have been produced in evidence, or of which duplicates have been produced. Will you now give me an account of any trials which you may have seen made, beyond those spoken of in your direct examination, of instruments like the originals, or substantially reproductions of them, giving the time of such trials and the purposes for which they were made?

Ans. I used the duplicate of the two-tone transmitter experimentally, in October or November, 1878, in connection with the violin animal tissue receiver or duplicate of it, the duplicate of the resonant box magnet receiver, the original concave diaphragm magnet receiver, the diaphragm box magnet receiver, using the identical one which has been put into the case as an exhibit, the wooden sounding box magnet receiver put in evidence as an exhibit with the octagon plate of iron in place of the oblong iron bar, the animal tissue revolving plate receiver put in evidence as an exhibit, and the tin place receiver put in evidence as an exhibit. In the place of the thin plate of metal mentioned in the eleventh answer I have used a variety of plates differing in shape from the original, but substantially a reproduction of it, in connection with various transmitters, some of which trials were made in May, 1874, others in July, 1874, and others at different times from that time to the present, the purposes of such trials being, some of them experimental and others exhibitions. I

AMERICAN BELL TELEPHONE COMPANY, -14

2894

have used the single tone transmitter, with all the various forms of receivers, experimentally, but cannot specify particular times of particular trials, except, perhaps, in October or November, 1878, when I used it in place of the two-tone transmitter in similar experiments. The animal tissue violin receiver, or duplicate of the original, was used at an exhibition given in Highland Park in December, 1874, and has been used for similar purposes since that time. The animal tissue revolving plate receiver, or duplicate of it, I have seen used experimentally, but cannot give dates of such uses. A duplicate of the paper drum receiver I have seen used for receiving a telegraphic message, I think, in the winter of 1874–1875. I have seen it used at other times, but cannot give the dates. A duplicate of the resonant box magnet receiver I saw used in July, 1874, experimentally, and saw it used about the same time for receiving a telegraphic message, in connection with one of the single tone transmitting instruments, mentioned as having been made during that same month. I have seen it used since, but cannot give the particulars. The concave metallic diaphragm magnet receiver was used in October or November, 1878, in testing transmitting instruments, one of which was the two-tone transmitter, made about that time (which has been put into this case as an exhibit); also the two single tone transmitters referred to as having been made in July, 1874. A duplicate of the wooden sounding box magnet receiver, put in evidence as an exhibit, was used in September, 1875, for reproducing melodies in connection with a transmitting instrument arranged for such transmission of melodies. One was also used for the same purpose in July, 1875, and a similar one in October, 1875, for the same purpose, and similar instruments, some of them differing a little in form, have been used at frequent intervals since that time for the same purpose; and on some of the occasions mentioned, perhaps all, a telegraphic message sent from the transmitting station was received from the receiving instrument.

[*Adjourned to March* 27, 1879, *at* 10.30 *A. M.*]

2895

NEW YORK, March 27, 1879, 10.30 A. M.

Direct Examination resumed.

Int. 167. You said in your cross examination (one hundred and thirty-fourth answer), "In the winter of 1874–5, in experiments with similar instruments, we were led to believe that they could be used as receivers for the human voice": what instruments were you using and what capacity in the receivers did you notice which led you to believe they could be used as receivers for the human voice?

Ans. We were using an instrument constructed for the purpose of transmitting melodies, similar to the one put in evidence, and marked "Gray's Two-octave Tone Transmitter," in connection with a duplicate of the resonant box magnet receiver. Some of the tones of the transmitting instrument were accompanied by a peculiar sound arising from the effect of a spark at the point of contact of the vibrating reed and contact screw. The peculiar quality of the tone at the transmitting instrument was reproduced exactly by the receiving instrument.

Int. 168. Can you name any other experiment made by Mr. Gray, leading to or confirming the belief that the receiving instruments he was using for musical tones could be also used for the human voice? If so, please describe the experiments.

Ans. In experimenting with an instrument for making and breaking a battery current by mechanical means, we noticed that we could vary the quality of the reproduced tone by a duplicate of the resonant box magnet receiver by certain manipulations of the transmitting instrument. With this combination we did produce sounds very much like sounds produced by the human voice. We made a very good imitation of a groan, such as a person would produce when in pain.

Int. 169. Will you describe what manipulations you refer to, stating whether or not they were of a character to affect the condition of the current when the circuit was closed; and if so, how?

Ans. The transmitting instrument spoken of in the former answer was composed of a metallic shaft, upon which there was placed a wheel for the purpose of revolving it. Upon the shaft there were also two metallic cams, upon which rested levers of metal. Mounted

2996

under each lever was a contact screw, adjustable and so arranged that when the cut-away portion of the cams reached the end of the levers the latter would drop and make contact with the screws. One battery wire was attached to one of the levers, the current passing to the screw, from that screw to the other lever, the oth r wire being attached to the other contact screw, so that when either was separated the battery circuit was open. One or both of the levers could be used. Rubber springs were used to vary the contact. When in use the revolving shaft would break the current a definite rate per second, and while so running, by drawing upon the rubber springs, or by pressing upon the levers with the fingers, a variable degree of contact would take place; which variable degree of contact would produce variations in the quality of the tone reproduced by the receiving magnet.

Int. 170 If you have it here, will you produce the apparatus you have referred to?

Ans. I do produce it.

[*The apparatus produced is marked "Defendant's Exhibit Gray's Mechanical Transmitter, W. C. W., Ex'r."*]

I will add, to complete my explanation, that when one of these levers and contact points was used alone, the other lever and point was cut out by a temporary wire.

Int. 171. Returning to the answer to the one hundred and thirty-fourth cross-question, where you say you and Mr. Gray were led to believe, from experiments with receiving instruments, that they could be used as receivers for the human voice: state what, if anything, Mr. Gray said indicating such a belief on his part.

Ans. The remark was made by Mr. Gray that our receiver in use at the time was capable of reproducing the human voice.

Int. 172. Do you remember whether or not, at or about the time of your seeing the lover's telegraph in Milwaukee, you mentioned to Mr. Gray what you had seen?

Ans. I do not remember the circumstance at the very time, but remember speaking with him about it. There was another party with me when I saw it, who also saw it, — Mr. C. H. Haskins, of Milwaukee, — who probably first spoke to Mr. Gray of it.

Int. 173. In several places in your cross examination you alluded

to possible differences between original instruments used by Mr. Gray and the exhibits which you have produced here as reproductions of such instruments; do you know of any difference between any of the exhibits and the instrument it purports to represent, which in any way relates to or would affect the operation of the original instruments for transmitting and receiving musical tones, or whatever other tones you have spoken of as being produced by them?

Ans. I do not.

Int. 174. Speaking of your exhibit, which is called a duplicate of Gray's original two-tone transmitter, you said, in answer to one hundred and nineteenth cross question, "Probably the separate parts of this instrument are not exactly duplicates," etc.; and again, in answer to the one hundred and twenty-fifth cross question, speaking of the Exhibit Gray's Resonant Box Magnet Receiver, you say you presume that the magnets and box are not identically like the original, as you understand the word; and again, in answer to the one hundred and thirty-first cross question, speaking of certain other boxes which were used in connection with the single tone transmitter, you said they were not exactly of the same dimensions as that which you have produced as a part of the exhibit: why do you speak thus doubtfully in regard to the exact correspondence of the reproductions with the originals? And state how far, if at all, you believe, as matter of fact, that there is any difference.

Ans. Because of the impossibility of making two things exactly alike with a model before you, and still more so without the original, having only a representation of it, or drawing. So far as I know, there is no difference in the working of the originals or duplicates.

Int. 175. I understand the one hundred and thirty-third cross-interrogatory to ask whether the reproduction of the tones of the single tone transmitter was the ultimate object of the apparatus in which it and the concave metallic diaphragm receiver were used together, and you answered, "At the time it was produced it was." What distinction do you make between the time it was produced and some later time? Please explain your answer.

Ans. I was not aware to what further uses it might eventually be put.

instruments, electro-magnets, galvanic batteries, of various forms; all of which operated successfully a long while before I became a professional electrician. About the year 1865 the opportunity offered that I long sought to become engaged professionally as an electrician and inventor. In the winter of 1866–7, while experimenting upon an improvement in telegraphic relays which were patented in the fall of 1867, I made my first observation relating to the transmission of musical tones or sounds telegraphically. The apparatus I then used consisted of an induction coil of ordinary construction, having a vibrating electrotome. In the primary circuit there was a battery and an ordinary Morse key. In the secondary circuit, in which was included a short line, was placed an instrument known as a polarized relay, which operates by to and fro currents. When the key was closed, the electrotome was thrown in vibration, producing a sound or tone more or less musical, and this tone or sound was reproduced on the receiving instrument (the polarized relay) before mentioned. At this time I also conceived the idea of constructing an instrument for transmitting tunes, similar in its general aspects to instruments made at a later date. From this time till about the beginning of 1874, I was constantly engaged as an inventor of electrical appliances, generally relating to improvements in telegraphic apparatus. All the inventions I made during this time I cannot now recall, as many were never patented. I can name, however, patent for self-adjusting relay, granted in the fall of 1867; another, April 14, 1868, for what is known as the induction relay. After that I invented and constructed several forms of telegraphic repeaters, dial telegraph instruments, a printing telegraph instrument which has been and is extensively employed by the Gold and Stock Telegraph Company. I also invented and patented an electric hotel annunciator, now in very general use. I was also first inventor of what is known as the travelling annunciator, used in elevators. I invented and patented a telegraphic station switch, which is in very general use.

Int. 7. When did your residence in Chicago begin?

Ans. About November or December, 1869.

Int. 8. Mr. Goodridge has testified, that in the early part of

1874 you were the superintendent of the Western Electric Manufacturing Company, of Chicago; when did you take that office?

Ans. I took the office at the time the company was organized; I think in the year 1872, about May.

Int. 9. What was the nature and extent of the business which that company carried on during your superintendence?

Ans. We were manufacturers of all kinds of electrical and telegraphic instruments, and dealers in telegraphic supplies. At the time the company was organized, we employed from twenty-five to fifty men,—I cannot give the exact number,—but the business rapidly increased, so that in 1874 we were employing about one hundred men, more or less. It was, and has been till now, about equal to the Western Union shops in New York, in extent. At the time of its organization it was larger, I think.

Int. 10. Mr. Goodridge has produced an instrument which is marked "Defendant's Exhibit Gray's Two-tone Transmitter," which he says represents an instrument he made by your direction, in April, 1874, at Chicago, and described the manner of connecting it up and using it for the purpose of transmitting two tones simultaneously or singly over a telegraphic circuit. Do you remember the original instrument?

Ans. I do.

Int. 11. Have you read Mr. Goodridge's deposition?

Ans. I have.

Int. 12. Is his description of the instrument just referred to, and the manner of its use, correct?

Ans. It is.

Int. 13. Mr. Goodridge also describes an instrument which was made by him under your direction after the two-tone transmitter, and which was an instrument for transmitting one tone, and is said by him to be represented by Exhibit Gray's First Single Tone Transmitter, parts of which are parts of the original instrument; and he describes the manner in which it was set up and used in circuit for the purpose of transmitting its tone. Is the original instrument correctly described by him, and the exhibit just mentioned a correct representation of it as stated by him, and was it used as described by him at the time stated?

Ans. Yes.

Int. 14 In answer to the twentieth interrogatory of his deposition, Mr. Goodridge describes a number of receiving instruments as having been used by you or under your direction in Chicago: namely, an animal tissue receiver under three different forms, a paper drum receiver, a magnet receiver with a hollow tin box placed on or near the poles, a concave metallic diaphragm receiver, a magnet receiver having the magnets enclosed in the box, and a magnet receiver consisting of an iron plate mounted upon a sounding box. Do you remember these receiving instruments, and are they correctly described by Mr. Goodridge?

Ans. I remember them; and they are correctly described, so far as I recollect. The one described as an iron plate, mounted upon a sounding box, had also an electro-magnet.

Int. 15. First, as regards the use of the several forms of animal tissue receiver and the paper drum receiver, as used in Chicago with the assistance of Mr. Goodridge, before you went abroad in August, 1874; is Mr. Goodridge's account of such use of the instruments correct?

Ans. It is.

Int. 16. Mr. Goodridge also describes the use in Chicago, before you and he went abroad, of the first single tone transmitter in a closed circuit, and with the magnet receiver, consisting of the hollow tin box, placed on or near the poles of the magnet; his description being contained in his twenty-ninth to thirty-third answers. This use, he says, was at the works of the Western Electric Manufacturing Company. Do you remember the use referred to?

Ans. I do. I cannot give the time as to the month; it was before going abroad, however.

Int. 17. Does Mr. Goodridge describe the place and conditions and results of that demonstration correctly?

Ans. Yes, sir.

Int. 18. In his thirty-fifth and thirty-sixth answers Mr. Goodridge describes the use at the works of the Western Electric Manufacturing Company, before you went to Europe, of the concave metallic diaphragm receiver with the first single tone transmitter

working over a closed circuit. Do you remember such a use before you went abroad in 1874?

Ans. I do. I am not sure whether it was with the first single tone transmitter, or one which they subsequently made like it.

Int. 19. State, if you know, who witnessed this use and who was at the receiving end and who at the transmitting end.

Ans. I cannot tell definitely who, beside myself and Mr. Goodridge, were present. I was at the receiving end, Mr. Goodridge at the transmitting end a portion of the time. The order was reversed at times, to give Mr. Goodridge chance to observe the results at the receiving end. The experiments were openly conducted, and a number of persons might have witnessed them. I am very sure that Mr. E. M. Barton, Mr. M. G. Kellogg, and, I think, Mr. Ernest Warner were present at some of these experiments.

Int. 20. Mr. Goodridge has described, in his testimony, two multiple transmitting instruments — a single octave and a double octave — as made for you in Chicago in 1874, before you went abroad, and used in connection with the resonant box magnet receiver and the concave metallic diaphragm magnet receiver, with a closed circuit, at Chicago, before you went abroad. Is the description given by Mr. Goodridge, of the manner in which these transmitters were constructed, and the manner they were used in connection with the receivers mentioned, correct?

Ans. It is.

Int. 21. Mr. Goodridge refers, in his deposition, to an exhibition made in July, 1874, of the two octave transmitter, with the resonant box receiver and the concave metallic diaphragm receiver, in Chicago, between the office of General Stager, superintendent of the Western Union Telegraph Company, and the works of the Western Electric Manufacturing Company, the two stations being about three quarters of a mile apart, the receiver being at General Stager's office, and the transmitter at the other end. Mr. Goodridge was, he says, at the transmitting end on this occasion. Do you remember the trial referred to? If so, what did you have to do with it, if anything?

Ans. I distinctly remember the trial, and I conducted the exhibition at the receiving end. We used the concave metallic dia-

phragm receiver, but I am not sure as to the use of the resonant box on this occasion.

Int. 22. State the character of this exhibition, whether public or private; and by how many persons was it witnessed, so far as you know?

Ans. It was public, in the sense that any one was privileged to witness it; and during the exhibition several persons from outside were invited in, besides a number of the employés about the building.

Int. 23. Please state the character of the results obtained upon that trial as to loudness and distinctness of tones heard, and otherwise.

Ans. The results were satisfactory in every respect. A number of tunes were transmitted which could be heard and recognized in any part of the room without the least difficulty.

Int. 24. I understood you to say that you were not sure that the resonant box magnet receiver was used on that occasion. Do you remember any occasion on which it was used for the purpose of exhibition with the key-board transmitter, whether single or double octave, and in a closed circuit as before in Chicago, before you went abroad in 1874?

Ans. It was used a number of times in connection with the key-board transmitter, on our experimental wire at the shop.

Int. 25. Did you, before going abroad in August, 1874, take from Chicago to the city of New York any of the instruments mentioned by Mr. Goodridge, for the transmission of musical tones, and exhibit there such instruments and their operation?

Ans. I did.

Int. 26. What instruments did you so take and exhibit there?

Ans. The single octave transmitter, the resonant box magnet receiver, the original violin animal tissue receiver, and the paper drum receiver; that is all I remember.

Int 27. What time in 1874 was this?

Ans. It was in the early part of May that I first exhibited them in New York, the exhibition extending through ten days or two weeks.

Int. 28. Had your concave metallic receiver been made at this time?

Ans. No, sir.

Int. 29. In what place or places in New York did you give the exhibition you speak of?

Ans. First, at the office of the Gold and Stock Telegraph Company, 61 Broadway. Secondly, at what was then the Western Union Telegraph building, 145 Broadway.

Int. 30. Please describe the manner in which these exhibitions were conducted, as to the distance apart of the transmitting and receiving stations, and other conditions bearing upon the question of the capacity of the instruments for distinct transmission of musical tones.

Ans. Ordinarily, the exhibitions were conducted between two rooms in different parts of the building or buildings by a wire connecting one with the other. The rooms were so situated with reference to each other that the noise of the transmitters could not be heard at the receiving end, except upon the receiving instrument connected in circuit. On two or three occasions, or perhaps more, we made a long line by means of looping two wires together in a distant city, which gave us the two terminals in the same building. The results were satisfactory under all the conditions mentioned, in the matter of clearness and loudness of tone at the receiving end.

Int. 31. Please describe a little more fully what you refer to as making a long line by means of looping two wires together in any distant city.

Ans. In one instance we used two wires to Boston, connected in the following manner: Starting from the ground in New York, one wire passed first through the transmitting instrument, and from thence to Boston, where it was disconnected from the ground and connected to the end of another wire (also disconnected from the ground in Boston), which ran back to New York, fastened through the receiving instrument and from thence to the ground, making a length of line double the distance from New York to Boston.

Int. 32. In working with this looped line around Boston, in what building in New York were the two terminals, and in what parts of that building respectively?

2903

Ans. In the Western Union building before mentioned, 145 Broadway. One terminal was in the room with the transmitter, the other in the room with the receiver; the two rooms being those previously mentioned in my thirtieth answer.

Int. 33. I have understood from your answers that this demonstration with the looped line around Boston, or another distant city, took place in May, 1874; was it so?

Ans. It was.

Int. 34. Were the instruments connected up and worked in a constantly closed circuit, in the exhibitions which took place in New York, in May, 1874?

Ans. They were worked there as everywhere. As Mr. Goodridge explained, the transmitter was made on the plan of what is called the single tone transmitter. For convenience of operation, when the keys were up the line was opened, but when any key was depressed, the running of the circuits during the continuance of the transmission of any tone was precisely the same as shown in the exhibit marked "Gray's Closed Circuit, Single Tone Transmission Apparatus"; so that the actual operation during the transmission was the same in both instruments.

Int. 35. Referring particularly to the use (in these New York exhibitions) of the resonant box magnet receiver, state whether it was used resting upon the poles of the magnet, or slightly removed from them, or in both ways?

Ans. It was used in both ways.

Int. 36. When slightly removed from the magnet poles, was it supported in that position in the same way that Mr. Goodridge described, as to its use in that manner in Chicago?

Ans. It was.

Int. 37. Was there any difference in the loudness or distinctness or quality of the received tone, according as the resonant box receiver was resting upon the poles or slightly removed from them? If so, state.

Ans. Ordinarily there was a difference in favor of slightly removing the resonant box either from one or both poles. I will state further that the difference was very slight in some positions of contact, as to the matter of loudness and quality. For instance, if the

box were slightly tipped, as was a common way of using it, so that the bearing was on the edge of the poles, the result would ordinarily be better as to loudness than when flat upon the poles. This, however, was not always true, for I could get the same good results by simply turning the box around on the face of the poles. I have always supposed this to be due to the fact that the face of the box in contact with the poles was not perfectly even, although such unevenness could not be detected by the naked eye.

Int. 38. Will you name such persons as you can who witnessed the exhibitions in New York, which you have described?

Ans. Of those now living I will name, at 61 Broadway, I remember Mr. Applebaugh, Mr. Scott, now superintendent of the Gold and Stock Telegraph Company, Mr. R. Henry, Mr. Wiley, and many others. At 145 Broadway, General Thomas T. Eckert, Mr. Chandler, superintendent of the Atlantic and Pacific Telegraph Company; Mr. S. Brown, district superintendent of the Western Union Telegraph Company; A. S. Downer, manager of the operating room, Western Union Telegraph Company; G. M. Phelps, superintendent of the Western Union Telegraph Company's shops; Mr. Phelps, Jr., of the same shop. Most of the directors and the executive committee of the Western Union Company were present at one of the exhibitions, in a body, and many others.

Int. 39. Did you make similar exhibitions with the same apparatus in other cities than New York, before you returned to Chicago that spring?

Ans. I did. I exhibited in Washington City, in presence of Prof. Henry, at the Smithsonian Institute, on two or three occasions. At one of these, Prof. Watson, of Ann Arbor, Prof. Hall, of the Naval Observatory, Washington, and others were present. I also exhibited between two rooms in a building on the corner of Fourteenth Street and Pennsylvania Avenue, then occupied by the Western Union Telegraph Company. There were present at these exhibitions a number of persons at different times, among whom was Mr. Elliot, the Chief Clerk of the Treasury Department Bureau of Statistics; Mr. A. L. Hayes was present. These are all the names I can recall now.

Int. 40. You have read Mr. Goodridge's description of the in-

2905

struments which were carried abroad by you and him in August, 1874, and sent back to this country in the following October, and of the places in which, the manner in which, and the persons to whom they were exhibited while in England. Is his description correct?

Ans. Correct. I will add that Mr. Goodridge was chiefly at the transmitting end, and could not swear to all that I could.

Int. 41. Were all the receivers which were carried out, exhibited at one time or other in circuit with the multiple transmitter, during your stay in England?

Ans. They were.

Int. 42. It appears, by Mr. Goodridge's deposition, that the apparatus which was taken out to England by you was sent back to this country through the custom-house, and there detained for some reason, so that they did not come into his possession again until the fall of 1875. Will you explain the reason of this detention in the custom-house, so far as you could ascertain, and also all the efforts you made to get the apparatus out of the custom-house sooner than you succeeded in doing?

Ans. The instruments taken abroad were for a particular purpose, and not designed to be left there; and it was expected that they would be returned free of duty. When we sailed for this country in October, 1874, the instruments were left in charge of Warden, Muirhead & Clark, to be shipped to us at New York. I was not familiar with the rules of the custom-house in the matter of shipping goods from a foreign port to this country, and so left the matter with the before-mentioned gentlemen, who were constantly shipping, and were supposed to know all about it. After landing in New York, I waited three or four weeks for the arrival of the instruments, as I was very anxious to make some exhibitions before going west. After waiting a long time, — I do not now remember just how long, — I was notified by Morris & Co., foreign express agents, of the arrival of the goods. I went to procure them, but could not get them released from the custom-house, because no invoice had been sent. I was obliged to write to Warden, Muirhead & Clark to obtain the invoice; but not having the goods, they did not know how to make it out. And when, finally, I obtained either the invoice or shipping receipt, — I cannot tell which, — it did not have

the proper consular's certificate attached. This was followed by considerable correspondence, both with the express agent and the shippers and others, trying to find out what to do and how to do it. I went to a custom-house agent to have him look the matter up, and offered to pay the duty; but for some reason I was unable to get the apparatus. I employed two different parties; finally got a friend of mine to see the superintendent of the custom-house, and find out what the trouble was. He did not succeed; neither could he tell me how to proceed to get the goods. The result was that after a lapse of time — about one year, I think — they were sold for duties, I suppose, and I bought them of the party who bid them in at the sale.

[*Adjourned to April* 3, *at* 10.30 *A. M.*]

NEW YORK, April 3, 1879, 10.30 A. M.

Int. 43. You have read Mr. Goodridge's testimony as to transactions after you and he returned from Europe, including apparatus made for you and the use of the same, and the manner and results of such use. Do you confirm his testimony as true, so far as it states matters with which you were connected? pointing out what matters, if any, stated by him were not within your personal knowledge.

Ans. I do, with the following qualifications: Mr. Goodridge states, in answer to the sixty-fourth question of his direct examination, that there were two resonant box magnet receivers made. My recollection as to the disposal of them (that is, the two referred to by him) coincides with his, but I remember that we used one in Chicago on numerous occasions between the middle of June and the middle of July, 1874. That would seem to account for three. In the experiment referred to by Mr. Goodridge, in answer to the seventy-ninth direct question, I was at the receiving end, at Milwaukee, and Mr. Goodridge at the transmitting. In regard to the apparatus and its use mentioned in the eighty-ninth answer, the first use that I distinctly remember was in September, 1875. I remember such use was made at an earlier date and at different times, but I cannot exactly locate any experiment. The experiment mentioned by Mr. Goodridge in his ninety-ninth answer, I did not

2907

personally witness. I did witness similar experiments at a subsequent time. In regard to the experiments mentioned by Mr. Goodridge as conducted under the direction of Mr. Edward S. Renwick, I was there only a part of the time. I witnessed some of the experiments made with my different receivers, particularly the resonant box magnet receiver.

Int. 44. I will call your attention particularly to the trial which Mr. Goodridge mentions as having been made upon a telegraph line between Chicago and Milwaukee, near the middle of February, 1875, in which trial you were at the receiving station. State what receiver or receivers were used upon that trial.

Ans. I used the receiver called the "diaphragm box magnet receiver."

Int. 45. Can you name any persons who witnessed this trial at the receiving station? And state whether it was a private or a public exhibition, and state the character of the results obtained.

Ans. Mr. C. H. Haskins, superintendent Northwestern Telegraph Company; Mr. Weller, manager of the Western Union Telegraph Company at Milwaukee; Mr. Kelsey, chief operator Northwestern Telegraph Company; Mr. Shape, chief operator Western Union Telegraph Company, Milwaukee, and a number of others were present. The exhibition was in Mr. Haskins's office, and was open to any one. The design of this particular experiment was to test the ability of the tones to travel over a long line. The result of the experiment was satisfactory, and we were able to receive messages by means of the before-mentioned diaphragm box magnet receiver, which received musical tones instead of the ordinary Morse dot and dash; the duration of and intervals between the musical tones corresponding to the arbitrary signs of the well-known Morse alphabet.

Int. 46. When did you first see the instrument sometimes called the lovers' telegraph, and where? And state by what name it was then called. I refer to the instrument which was described as the lovers' telegraph in Mr. Goodridge's deposition.

Ans. In November or December, 1875, at Milwaukee. I do not remember any name given it at that time. I remember the description of it as first given to me by Messrs. Goodridge & Haskins, as

both were present when it was described, and a few days later I saw it.

Int. 47. Will you now state what, if anything, you had observed in your uses of different tone transmitters, in 1874 or 1875, which showed to you the capacity of your resonant box receiver, or diaphragm box magnet receiver, or concave metallic diaphragm receiver, to receive and reproduce to the ear the quality as well as the pitch and loudness of the transmitted tone?

Ans. The first experiment I remember, which attracted my attention particularly to the fact that the quality as well as pitch and loudness could be transmitted electrically through a telegraphic circuit and received upon a common or universal receiver, was in the latter part of January or the fore part of February, 1874. I refer now to what is known as the bath-tub experiment. I was then using an ordinary induction coil, having a vibrating electrotome, and I was receiving the vibrations transmitted through the secondary circuit through my body, the other pole of the coil being connected with the zinc lining of the bath tub, which was dry at the time. When I rubbed the tub lining with my fingers or the palm of my hand, the noise made by the vibrator was faithfully reproduced at the point of contact, as I was near enough to the transmitting instrument to hear it, and was thus able to make a comparison. I made numerous changes in the adjustment of the electrotome, getting a great range of vibratory effects, producing sounds (not very musical ones) of a great variety of quality. The fact that these were all faithfully reproduced demonstrated to me at that time that quality as well as pitch could be transmitted electrically. I observed the same thing in all my later experiments during the years 1874 and 1875.

I will refer now to an experiment made in 1875, with the transmitter marked "Gray's Mechanical Transmitter," in connection with one or more of the common receivers or their duplicates that had been described by Mr. Goodridge. When the transmitter referred to had one of its vibrating break points placed in circuit in which was the battery and the common or universal receiver, and the shaft which actuated the break point was revolved steadily, there was a sound of a peculiar quality reproduced at the receiving end on the

2909

common receiver. This quality was greatly varied by graduating the pressure either by the finger or by a rubber spring upon the lever carrying the break point, so that by proper manipulation with reference to pressure we obtained a great variety of sounds on the receiver, not unlike the human voice, imitations of vowel sounds, and also imitations of a groan as if in distress, were very perfectly transmitted and reproduced. It was our custom in all such experiments to use the different varieties of receivers, to notice the different effects produced on each. I cannot recall clearly whether all were used at that time or not; but I remember that more than one form was used, among which was the wooden sounding box receiver and the resonant box magnet receiver.

Int. 48. Mr. Goodridge, in his one hundred and sixty-eighth answer, spoke of this observed operation of the mechanical transmitter as leading to or confirming the belief that the receiving instruments you were using for musical tones could be also used for the human voice; what was your own judgment at that time upon that subject?

Ans. This experiment with the mechanical transmitter confirmed what my previous experiments had led me to believe: that not only could the receivers that had been named be used as receivers of articulate speech transmitted electrically, but that such speech could be transmitted through or from a single point. I mean by single point, without the intervention of a series of reeds or points differently tuned, and one that would be a common or universal transmitter, in the same sense that the receivers were universal or common.

Int. 49. Will you state how the knowledge which you got late in 1875, of the so-called lovers' telegraph, aided in the production of the invention of a speaking telephone, such as is described and represented in your caveat filed February 14, 1876?

Ans. The fact that all the vibrations, however complex or different in form, that are produced in uttering any given word or sound, were transmitted longitudinally through a fine thread suspended from the centre of a diaphragm capable of responding to all the aerial vibrations made by the uttering of a word or sound, and connected to a similar diaphragm at the other end of the thread, which might be from one

2910

to two hundred feet in length, proved to my mind that all the conditions necessary for the transmission of an articulate word were contained in any single vibrating point capable of responding, as before stated. I saw that if I could reproduce electrically the same motions that were made mechanically at the centre of the diaphragm by speaking upon it, such electrical vibrations would be reproduced upon a common receiver in the same manner that musical tones were; and from the fact that the electrical vibrations were the same in respect to rate, amplitude and form or complexity, as the motions made in the air by uttering words or sounds, it followed that the receiving diaphragm would be thrown into mechanical vibration or motion of a corresponding character, and consequently reproduce the same word or sound. The fact that the longitudinal movement (in water or other fluid of poor conducting quality) of a wire or some good conductor of electricity, with reference to another wire or metal conductor, produced variations in the resistance of an electric circuit proportional to the amplitude of movement, was old in the art at that time; so that the last link of knowledge necessary to solve the problem in my mind was furnished in the capabilities of the longitudinal vibrations of the string of the before-mentioned so-called lovers' telegraph.

Int. 50. At the time of your filing your caveat, February 14, 1876, had you ever seen or heard of any apparatus for the telephonic transmission of articulate speech, other than that which you described and represented in that caveat?

Ans. I had not.

Int. 51. When did you first have knowledge of Professor Bell's invention of a telephone or apparatus for telegraphic transmission of articulate speech?

Ans. I think the first knowledge I obtained was from a lecture delivered by Professor Bell in Boston, some time in the spring of 1876. A printed copy of that lecture was sent me by some one, and I am not now sure whether I received that copy before Professor Bell's exhibition at the Centennial or not. If not, the first I knew of it was at the Centennial, or about that time.

Int. 52. Was the instrument described in the lecture the same as that which Professor Bell exhibited at the Centennial?

2911

Ans. There were no drawings accompanying that lecture, as I remember it, and I do not think I had an intelligent understanding of the apparatus until I saw it at the Centennial exhibition.

Int. 53. Will you describe the apparatus which you saw at the Centennial exhibition?

Ans. The transmitting portion of the apparatus that I saw consisted of a vocalizing chamber very similar in form to the chamber of the receiver shown in my caveat. Across the large end of the chamber was stretched a membraneous diaphragm. Upon the centre of this diaphragm was glued a thin plate of iron or steel, I should think about three eighths of an inch wide and from an inch and a half to two inches long. In front of this armature or plate was mounted, in a frame connecting with the vocalizing chamber, an electro-magnet having a fixed relation to the armature or plate, but not touching it. The receiver, as I recollect it, was made of a single bobbin or helix having an iron core in the centre and an iron tube on the out-side, which was closed at one end, having the iron core fixed in the centre projecting up through the helix. A small circular plate of iron or steel was placed upon the other end so that its edges rested upon the outer cylinder or tube of iron, while its centre was over the central core, and, I think, not in contact; about the latter I am not sure. I understood from Professor Bell's description, that the two instruments were connected in circuit in which a battery was included, in the same manner that any two ordinary telegraphic instruments would be connected in circuit. This was the arrangement as to instruments and connections, to the best of my recollection at this date.

Int. 54. When I asked you as to your first knowledge of Professor Bell's invention of the telephone, I had reference to an actual working apparatus. Did you so understand me?

Ans. Not exactly. I thought you wanted to know when I first heard of anything that he had done in that line.

Int. 55. I suppose you knew, some time earlier than that, of what was contained in the specification and drawings of his patent of March 7, 1876.

Ans. I did.

Int. 56. Was this apparatus which you saw at the Centennial the first one you ever saw in which an induction diaphragm was used in combination with an electro-magnet as a telephone transmitter?

Ans. It was.

Int. 57. Was such combination for the purpose of a telephone transmitter new with Professor Bell, so far as you know?

Ans. It was, so far as I know.

Int. 58. Please state which of the various receivers which have been testified to as used by you in 1874 and 1875, was best adapted for receiving and giving out audibly tones of the human voice.

Ans. The concave metallic diaphragm magnet receiver was perhaps in some respects the best; but there is very little difference between that and the diaphragm box magnet receiver, and also the resonant box magnet receiver.

Int. 59. Please state how you were occupied in the year 1876, and down to October, 1877, stating what, if any, experiments or investigations you made during that time relating to telephones as distinguished from telegraphic apparatus proper; and so far as you did not, explain why not.

Ans. About the 15th January, 1876, I went to Washington, for the purpose of preparing and filing in the Patent Office a number of cases relating to telephony that had been accumulating through a number of months. I remained there till about the 1st March. From thence I went to Philadelphia, partly to prepare for the Centennial exhibition and partly for the purpose of exhibiting my apparatus relating to multiple telegraphy, to parties who were proposing to invest in it. I remained there during the spring months, but was called home early in June on account of sickness in my family. I returned a few days previous to the exhibition given by myself and Professor Bell at the Centennial on the same day. I was engaged from that time till after the 4th of July with my exhibit at the Centennial. During this period Mr. Goodridge constructed under my supervision a transmitter such as shown in my caveat of February 14, 1876. Not having any of my universal receivers there, except the wooden sounding box receiver, we did not have an opportunity to test it at that time. Early in July, I think before the 10th, I was sent to New York, or rather I went to New York at the

2913

request of Dr. White, who had a large pecuniary interest in my telephonic inventions, for the purpose of equipping a wire between New York and Philadelphia with my multiple telegraph apparatus. A few days after my arrival in New York I was taken sick, — what was supposed to be sunstroke. I was sick and unable to attend to my business but very little of the time until late in the fall, at which time we completed our demonstration between New York and Philadelphia. After this, at the request of Mr. Orton, then president of the Western Union Telegraph Company, and Dr. White, I proceeded to demonstrate the capacity of my system for working longer lines, and to that end went to Buffalo, spending some time there; after which I went to Chicago. All of the winter of 1876-7 I spent in this work, and during the spring and summer of 1877 was engaged in equipping different wires of the Western Union Telegraph Company, and demonstrating its capacity to work in connection with the ordinary Morse system. I was so engaged up till the fall of 1877.

Int. 60. Will you explain why your sounding box receiver was not adapted for a test of your caveat telephone transmitter?

Ans. It is a peculiarity of that receiver and receivers of that class that, while they will reproduce a tone or sound transmitted with a considerable degree of force (as by the use of a strong battery) with much greater loudness and clearness than by a receiver such as the concave diaphragm or resonant box receiver, they are not so good for receiving tones or sounds transmitted with a weak force, such as is transmitted by an ordinary speaking telephone.

[*Adjourned to April* 4, 1879, *at* 10.30 *A. M.*]

Cross Examination by CHAUNCEY SMITH, Esq., *of Counsel for Complainants.*

NEW YORK, April 4, 1879, 10.30 A. M.

Cross-Int. 61. In your answer to the fifth interrogatory, you say that the American Company's manufacture of telephones is conducted under license from owners of your patents put in evidence in this case, so far as such patents are applicable to telephones; who is the owner of the patents referred to?

Ans. The Harmonic Telegraph Company.

Cross-Int. 62. When was that license given?

Ans. At the date of the organization of the American Speaking Telephone Company, about the 6th December, 1877.

Cross-Int. 63. Was that license in writing?

Ans. I called it a license. We made a written contract, as I recollect it, the effect of which was to convey to the American Speaking Telephone Company the privilege of using anything that occurred in any of my patents relating to speaking telephones. I do not know just what the document would be termed in law. I will further explain that there were three parties to the agreement, the other party being the Gold and Stock Telegraph Company, who were made the agents of the American Speaking Telephone Company.

Cross-Int. 64. The agents to do what?

Ans. To manufacture speaking telephones and place them upon the market.

Cross-Int. 65. Did the agreement make any provision in respect as to who should bear the expenses of any litigation which might arise in the course of the business of either company in relation to speaking telephones?

Ans. It provided that such expenses should be advanced by the Gold and Stock Telegraph Company, and reimbursed to them out of the proceeds of the telephone business.

Cross-Int. 66. Did the contract make any provision that the Gold and Stock Company should be the owners of any of the capital stock of the American Speaking Telephone Company? If so, what proportion?

Ans. Yes; two thirds.

Cross-Int. 67. Who was to own the other third?

Ans. The Harmonic Telegraph Company.

Cross-Int. 68. When was the Harmonic Telegraph Company organized?

Ans. May 26, 1876.

Cross-Int. 69. Between the time when the Harmonic Telegraph Company was organized and the time of the organization of the American Speaking Telephone Company, were you a stockholder and officer in the former company?

3915

Ans. I was.

Cross-Int. 70. Can you state when the negotiations commenced between the Harmonic Telegraph Company and the Gold and Stock Telegraph Company, or any parties interested therein, which resulted in the contract to which you have referred?

Ans. I cannot state definitely at present. It was some time during the fall preceding the organization of the American Speaking Telephone Company.

Cross-Int. 71. Did you personally take part in the negotiations?

Ans. I did. I mean by that, I was present at a number of interviews during the pendency of the negotiations.

Cross-Int. 72. Do you remember who else was present, either as representing your own company, or the Gold and Stock Telegraph Company?

Ans. At some of these interviews, Dr. Samuel S. White, of Philadelphia, and E. W. Andrews, of New York, who were representatives of the Harmonic Telegraph Company, Mr. William Orton, Mr. George Walker, Dr. Norvin Green, Mr. Banker, — I have forgotten his initials, — Mr. Tracy R. Edson and Mr. George B. Prescott were present. These are all that I call to mind at this moment, and I do not know that they were all present at any one time.

Cross-Int. 73. Mr. Orton and the persons named after him were there on behalf of the Gold and Stock Telegraph Company, were they not?

Ans. That was my understanding.

Cross-Int. 74. Did you understand that any of them were officers of the company, and if so, what offices did they hold?

Ans. I understood that Mr. Orton was president of the Gold and Stock; Messrs. Walker and Prescott, vice-presidents; and the other gentlemen named, I think, were members of the executive committee or directors in the same company.

Cross-Int. 75. Where did the interviews take place at which you were present?

Ans. Generally in the Western Union Building, New York, and I think most frequently in Mr. Walker's room.

Cross-Int. 76. Mr. Orton was president of the Western Union, was he not, at that time?

Ans. He was.

Cross-Int. 77. Did you understand that the other gentlemen representing the Gold and Stock Telegraph Company were, any or all of them, officers in the Western Union Telegraph Company?

Ans. Some of them were, but not all.

Cross-Int. 78. Will you name those that were officers, and the offices they held?

Ans. Norvin Green was vice-president of the Western Union; Mr. Banker, I think, was a director, but I am not sure that he was at that time; Mr. George B. Prescott was an electrician. The other gentlemen had no connection with the company, to my knowledge.

Cross-Int. 79. What business was the Harmonic Telegraph Company organized to carry on?

Ans. It was organized to exploit, in whatever way seemed most feasible, my inventions and patents relating to the general subject of telephony. I mean by telephony, any invention in which the transmission, electrically, of musical tones or sounds was employed.

Cross-Int. 80. What was the significance of the word "harmonic" in the name of that company?

Ans. As the question is put, I don't quite understand it.

Cross-Int. 81. Do you know whether or not the term was used as indicating the nature of the business which was to be transacted, or the inventions which it was to exploit?

Ans. I think the name was suggested by the fact that in some of my inventions and patents, which were to be owned by the company, a means was shown for transmitting harmony.

Cross-Int. 82. Will you state what the Harmonic Company did from the time of its formation down to the time of the contract, which you have referred to, in exploiting your inventions?

Ans. In answer to question 59, in my direct examination, I have given a general account of my own work from the 15th of January, 1876, till the fall of 1877. I was then in the employ and under the direction of the Harmonic Telegraph Company. Others, besides myself, were also employed by the same company, at least one during all of this time; others, during a portion of the time.

Cross-Int. 83. Several patents of yours have been put in evidence which have reference to telegraphing by means of sounds, broken up

3,915

Ans. I was.

Cross-Int. 70. Can you state when the negotiations commenced between the Harmonic Telegraph Company and the Gold and Stock Telegraph Company, or any parties interested therein, which resulted in the contract to which you have referred?

Ans. I cannot state definitely at present. It was some time during the fall preceding the organization of the American Speaking Telephone Company.

Cross-Int. 71. Did you personally take part in the negotiations?

Ans. I did. I mean by that, I was present at a number of interviews during the pendency of the negotiations.

Cross-Int. 72. Do you remember who else was present, either as representing your own company, or the Gold and Stock Telegraph Company?

Ans. At some of these interviews, Dr. Samuel S. White, of Philadelphia, and E. W. Andrews, of New York, who were representatives of the Harmonic Telegraph Company, Mr. William Orton, Mr. George Walker, Dr. Norvin Green, Mr. Banker, — I have forgotten his initials, — Mr. Tracy R. Edson and Mr. George B. Prescott were present. These are all that I call to mind at this moment, and I do not know that they were all present at any one time.

Cross-Int. 73. Mr. Orton and the persons named after him were there on behalf of the Gold and Stock Telegraph Company, were they not?

Ans. That was my understanding.

Cross-Int. 74. Did you understand that any of them were officers of the company, and if so, what offices did they hold?

Ans. I understood that Mr. Orton was president of the Gold and Stock; Messrs. Walker and Prescott, vice-presidents; and the other gentlemen named, I think, were members of the executive committee or directors in the same company.

Cross-Int. 75. Where did the interviews take place at which you were present?

Ans. Generally in the Western Union Building, New York, and I think most frequently in Mr. Walker's room.

Cross-Int. 76. Mr. Orton was president of the Western Union, was he not, at that time?

Ans. He was.

Cross-Int. 77. Did you understand that the other gentlemen representing the Gold and Stock Telegraph Company were, any or all of them, officers in the Western Union Telegraph Company?

Ans. Some of them were, but not all.

Cross-Int. 78. Will you name those that were officers, and the offices they held?

Ans. Norvin Green was vice-president of the Western Union; Mr. Banker, I think, was a director, but I am not sure that he was at that time; Mr. George B. Prescott was an electrician. The other gentlemen had no connection with the company, to my knowledge.

Cross-Int. 79. What business was the Harmonic Telegraph Company organized to carry on?

Ans. It was organized to exploit, in whatever way seemed most feasible, my inventions and patents relating to the general subject of telephony. I mean by telephony, any invention in which the transmission, electrically, of musical tones or sounds was employed.

Cross-Int. 80. What was the significance of the word "harmonic" in the name of that company?

Ans. As the question is put, I don't quite understand it.

Cross-Int. 81. Do you know whether or not the term was used as indicating the nature of the business which was to be transacted, or the inventions which it was to exploit?

Ans. I think the name was suggested by the fact that in some of my inventions and patents, which were to be owned by the company, a means was shown for transmitting harmony.

Cross-Int. 82. Will you state what the Harmonic Company did from the time of its formation down to the time of the contract, which you have referred to, in exploiting your inventions?

Ans. In answer to question 59, in my direct examination, I have given a general account of my own work from the 15th of January, 1876, till the fall of 1877. I was then in the employ and under the direction of the Harmonic Telegraph Company. Others, besides myself, were also employed by the same company, at least one during all of this time; others, during a portion of the time.

Cross-Int. 83. Several patents of yours have been put in evidence which have reference to telegraphing by means of sounds, broken up

2917

into long and short periods corresponding to the dots and dashes of the Morse alphabet. Do these inventions, and the instruments described in the patents, come properly within the meaning of the term telephones, or telephonic instruments or inventions, as the terms have been generally understood for a number of years past?

Ans. I have always understood that any instrument or apparatus capable of transmitting sound to a distance, was properly called by the name telephone, whether this instrument be electrical or electro-mechanical or mechanical only. And I will add that my first inventions relating to the transmissions of musical tones electrically, I called telephones.

Cross-Int. 84. In the various transmitting instruments described in your several patents, and in the several transmitting instruments which have been produced here in evidence, in which a vibrating reed is employed, do such reeds form a part of an electric circuit which is broken by the vibration of the reeds?

Ans. All the patents showing vibrating reeds, and the several instruments put in evidence having vibrating reeds, such reeds do, in one sense, break an electric circuit, and in the same sense form *a part* of an electric circuit.

Cross-Int. 85. What do you mean by saying "in one sense"? Do not the reeds, in fact, form part of an electric circuit through which a current passes a portion of the time?

Ans. In some cases the vibrating reed serves simply to divert a portion of the electric current (produced by a given number of cells of galvanic battery) from the main line, through a short or shunt circuit in which the vibrating reed is placed. In this case, the reed does not open the main circuit, neither does it divert the whole of the battery from it; but it does make and break the before-mentioned short or shunt circuit.

Cross-Int. 86. I did not ask you anything about the main circuit. I want to know if in those instruments the reed itself forms a part of a circuit through which at times a current flows?

Ans. It does.

Cross-Int. 87. Is not that portion of the circuit of which the reed forms a part, broken by the vibration of the reed?

Ans. It is.

Cross-Int. 88. In its normal state, when the reed is at rest, and no current flowing through the circuit of which it forms a part, the circuit at those parts connected with the reed, or in contact with the reed, is closed; is it not?

Ans. It is closed.

Cross-Int. 89. Now, starting with that condition of things, if a current is allowed to pass through a circuit in which the reed is placed, it sets the reed in motion, does it not?

Ans. Not necessarily.

Cross-Int. 90. Is not that what it does in the practical operation of the instruments described in the patents, and in the transmitting instruments referred to, which have been produced in evidence?

Ans. That is the case with, I think, all the instruments produced in evidence, but not the case in some of the patents put in evidence.

Cross-Int. 91. In which one of the patents showing a vibrating reed forming a portion of a circuit is this not the case when the instrument is used in the manner it is designed to be used?

[*Adjourned to April* 5, 1879, *at* 10 30 *A. M.*]

NEW YORK, April 5, 1879, 10.30 A. M.

Ans. In my patents, numbered respectively, 186,340, dated January 16, 1877; 179,549, dated July 4, 1876; 205,378, dated June 25, 1878, reference is made to a transmitter described in my patent No. 165,728, granted July 20, 1875. In this transmitter the reed forms a common track for two circuits through a part of their length. One circuit connecting with the reed branches off on the right-hand break point as presented in the figure, passing directly to the other pole of the battery without passing through any electro-magnet; the other circuit connects with the reed passing off at the left-hand break point through the magnets of the instrument, completing a circuit through a local battery. When used in the systems shown in the above named patents, the closing of one circuit would not vibrate the reed, while closing the other with the battery in would vibrate the reed.

Cross-Int. 92. Then, if I understand you, whenever the reed,

2919

being in a state of rest, is set in motion, it is set in motion by a current which passes through it?

Ans. It is.

Cross-Int. 93. And in all these instruments having vibrating reeds, the movement of the reed breaks the circuit of which it forms a part, and interrupts the flow of the current. Is that so?

Ans. That is so.

Cross-Int. 94. Now, what effect does this temporary current produce in the receiving instrument, whatever it may be? I mean, of course, the receiving instruments which you have produced in evidence as being made in 1874 and 1875.

Ans. I understand you to mean by temporary current, that current which flows through the reed and its contact point at the moment they are closed. The effect of closing this circuit, when the transmitter is connected, as shown in the several patents referred to in my ninety-first answer, is to divert that portion of the battery which is included in this temporary circuit from the main line in which the receiver is placed, or a large portion of it, thus causing at each vibration of the reed an electrical impulse or wave to pass over the line which acts upon the receiver, in the same manner that a similar impulse obtained by any other mode would.

Cross-Int. 95. Now, do not the vibrations of the reed of the transmitting instrument, if they are sufficiently rapid, produce, in addition to the electrical waves you have spoken of, sounds or sound waves in the atmosphere, which are given off into the space surrounding the vibrating reed?

Ans. They do.

Cross-Int. 96. I find in the caveat which has been put into evidence, filed by you in the Patent Office, February 14, 1876, these statements, following a description of the apparatus shown in the drawings: "Owing to this construction, the resistance varies constantly, in response to the vibrations of the diaphragm, which, although irregular, not only in their amplitude but in rapidity, are nevertheless transmitted, and can, consequently, be transmitted through a single rod, which could not be done with a positive make and break of the circuit employed, or where contact points are used. I contemplate, however, the use of a series of diaphragms in a common vocalizing

chamber, each diaphragm carrying an independent rod, and responding to a vibration of different rapidity and intensity, in which case contact points mounted on other diaphragms may be employed." I find no representation in the drawing of the apparatus referred to in the last sentence of the quotation, if I understand them, and I am unable from the description to make out what this apparatus was to be. Will you please explain it, stating what things you intended to use and how they were to be arranged, and what their operation would be?

Ans. The apparatus proposed in the sentence referring to a series of diaphragms, while it was not clearly defined in all its details, in my mind at that time, I had this general idea. I have stated in the preceding sentence to the one under discussion in my caveat, in substance, that articulate sounds could not be transmitted successfully where a positive make and break in the circuit was employed. In making this statement I had in mind one form of the Reiss telephone with which I was familiar, which had a fixed point so adjusted in relation to a diaphragm, that when the diaphragm was thrown in vibration by the voice, or other sound, it would make and break contact with this fixed point; and if an electric current were passing through it, it would be interrupted. The idea I had in mind where I speak of a series of diaphragms each carrying an independent rod, etc., was not to have the rods or points to vibrate against another fixed point, but to have such points mounted in some manner that they would yield; as, for instance, on another diaphragm, or somewhat after the manner shown in my patent, No. 194,671, granted August 28, 1877. This patent shows a diaphragm, having a light lever hinged at one end, while the other rests upon the centre of the diaphragm, which has glued upon it a small piece of platinum, making the electrical connection with the binding post. The operation of such an apparatus as last described, in contrast with the one described having a point with a fixed relation to the diaphragm, is very different. In the latter arrangement, when the diaphragm is thrown into vibration, it does not necessarily produce an actual break in the circuit. If the vibration is too powerful it will; otherwise it simply has the effect of varying the resistance, and the variation of resistance is proportional, within certain limits, to the amplitude of vibration of the diaphragm.

2921

The idea of using a series of diaphragms differently stretched or tuned, I supposed at that time would give the instrument a greater range: a theory which has since proved to be false, although the instrument would operate if so constructed, but not so well as with a single point.

Cross-Int. 97. Was the fact that the resistance to a current of electricity passing through two points in contact, would vary with the pressure between those points and within certain limits in proportion to the pressure, a well-known fact in electrical science at the time your caveat was filed?

Ans. It was well known to me as far back as 1867, and I believe it was old in the art at that time.

Cross-Int. 98. Part of the exhibit embracing your caveat, defendant's Exhibit Gray's Caveat, is a notice to caveator, dated February 19, 1876, containing the following: "You are hereby notified that application has been made to this office for Letters Patent for telephonic telegraph, etc., with which the invention described in your caveat, filed on the fourteenth day of February, 1876, apparently interferes," etc. The notice concludes as follows: "If you would avail yourself of your caveat, it will be necessary for you to file a complete application within three months from date; three days additional, however, being allowed for the transmission of this notice to your place of residence." This notice is addressed: "Elisha Gray, care of W. D. Baldwin, present." Did you personally see this notice, or know that it was sent at the time, or about the time?

Ans. I am quite sure I saw it. I certainly knew it was sent within a few days of the time.

Cross-Int. 99. Did you know or understand whose application it was which is referred to in the notice as interfering with the invention described in your caveat?

Ans. At the time I received the notice I did not know.

Cross-Int. 100. When did you first learn?

Ans. I do not know that I ever learned except from what I inferred from the official record in the case.

Cross-Int. 101. What did you infer from the official records of the case, and when did you make that inference?

Ans. I supposed it to be Professor Bell's application, from two or

three facts. One was the correspondence with Pollok and Bailey, who were Professor Bell's attorneys in another case or cases, relating to the transmission of musical sounds. Another thing which led me to suppose such was the case was the fact, that a few days after I was notified to complete my application, I received a letter through my attorney, Mr. Baldwin, notifying me that the notice to complete previously sent me was withdrawn. Shortly after this a patent was issued to Professor Bell, which helped to confirm me in the idea I before had, that he was the interfering party. I wish to add that as to the official correspondence referred to, I do not now recall at which time I first saw it; whether it was before the issue of Professor Bell's patent of March 7, 1876, or after.

Cross-Int. 102. Had there not been for some considerable time one or more interferences in the office between yourself and Professor Bell upon inventions relating to musical telephones, or the multiple transmission of messages by means of sounds representing the Morse characters?

Ans. There was an interference between myself and Professor Bell, on applications filed by me on the 23d of February, 1875, and by Professor Bell on the 25th of February, 1875. I think, perhaps, two previous applications of mine were also involved to some extent.

Cross-Int. 103. When did you first see the specification of Mr. Bell's patent of March 7, 1876, to which, as I understand you, you have just referred?

Ans. I think it was during the same month of the issue of the patent. My recollection is that Mr. Baldwin sent me a copy to Philadelphia, where I was then stopping.

Cross-Int. 104. You referred in your direct examination (in your fifty-first answer) to a lecture of Professor Bell's, a printed copy of which was sent to you by some one about the time of Professor Bell's exhibition at the Centennial. Will you look at the pamphlet I now hand you, and state whether or not it is the same lecture as that of which you received a printed copy?

Ans. It is the same, to the best of my recollection.

Complainants' counsel offers the pamphlet in evidence, and the same is marked "Complainants' Exhibit 9, W. C. W., Ex'r."]

2923

[*Defendant's counsel objects to the use by the complainants, in evidence, of the statements of Professor Bell made in the said pamphlet.*]

Cross-Int. 105. In your answer to the fifty-third direct interrogatory you gave a description of certain apparatus of Professor Bell's, which you saw at the Centennial. Who was present at the time you saw that apparatus?

Ans. There were a large number of people present, and of those I call to mind at this moment I will name Professor Bell, the Emperor of Brazil, Sir William Thomson, Professor G. F. Barker, Professor James C. Watson, Professor Hillgard, Rudolph Koenig. Those are all I think of just now.

Cross-Int. 106. Did you, at that time, see the apparatus tried, which you described in your direct examination?

Ans. I did.

Cross-Int. 107. What did you see done with it?

Ans. I saw, at the receiving end, several persons holding the receiving instrument to their ears. At the transmitting end I saw a man talking into the instrument that I have described as the transmitter.

Cross-Int. 108. Did you yourself try the receiving instrument to your ear?

Ans. I did. The Emperor had just been using the receiving instrument, and as he took it down from his ear and started away to the transmitting end, he said, "To be or not to be." From this I took the cue as to what was being recited at the transmitting end. I listened intently for some moments, hearing a very faint, ghostly, ringing sort of a sound; but, finally, I thought I caught the words, "Aye, there's the rub." I turned to the audience, repeating these words, and they cheered.

Cross-Int. 109. Was that the first time you had heard articulate speech transmitted over an electric circuit?

Ans. It was the nearest approximation to articulate speech that I had ever heard.

Cross-Int. 110. It was the first time, was it not, that you had listened at a speaking telephone apparatus for the purpose of hearing what it would do?

Ans. I made some experiments about the same time in the

Exposition building, with a transmitter that I have referred to in my direct testimony; but I am unable, at this time, to state whether those experiments were conducted before or after Professor Bell's exhibition. My impression is, it was after. If so, the results I obtained at Professor Bell's exhibition were the first approximating articulate speech transmitted by the human voice.

Cross-Int. 111. In your experiments with your own transmitter in the Exposition building, what did you use for a receiver?

Ans. I used the wooden sounding box receiver, as that was the only thing I had there.

Cross-Int. 112. Was that transmitter made in Philadelphia?

Ans. It was.

Cross-Int. 113. Was the construction of that transmitter the first attempt you had made to construct the apparatus specifically described and represented in the drawings of your caveat?

Ans. I believe it was. Of this I am not quite certain.

Cross-Int. 114. You described, in your direct examination, a transmitting instrument exhibited by Professor Bell on the occasion referred to. Did you see a different transmitting instrument among the apparatus exhibited by Professor Bell?

Ans. I have no recollection of having seen any other than the one described.

Cross-Int. 115. What apparatus did you exhibit to the judges on that day?

Ans. I exhibited the musical telephone adapted to the transmission of tunes, consisting of a key-board transmitter and a variety of receivers, among which was a wooden sounding box receiver, another having a series of sounding boxes connected by one bar, and the revolving drum receiver. In addition to this I exhibited my harmonic telegraph system, substantially as described in my patent No. 186,340, granted January 16, 1877. I also exhibited a receiver shown in my patent 166,094, granted 27th July, 1875. With this receiver I exhibited the method of making the tone signal operate an ordinary Morse sounder. The other telegraphic receivers were substantially like those described in my patent No. 175,971, granted April 11, 1876.

Cross-Int. 116. Was the wooden box receiver which you had

2925

there the one, or like the one, which has been put in evidence, marked "Gray's Wooden Sounding Box Magnet Receiver"?

Ans. It was substantially like it. I think the box was larger somewhat, and had S-shaped openings in the top instead of the side, as in the exhibit.

Cross-Int. 117. Did you see the reports of the judges when they were made upon the apparatus exhibited by you, and also upon that exhibited by Professor Bell?

Ans. I saw the report made upon my own apparatus, but not on that of Professor Bell.

Cross-Int. 118. Did you see this report upon your apparatus before it was printed or afterwards?

Ans. I first saw it when it was sent to me officially by the officers of the Exposition.

Cross-Int. 119. When did you first see the printed reports of the judges issued in volumes, especially the volume containing the report on your own apparatus?

Ans. I have no recollection now of having ever seen it; certainly not to read it.

Cross-Int. 120. Have you ever seen that upon Professor Bell's apparatus?

Ans. I have not.

Cross-Int. 121. Will you look at pages 92 and 93 in George B. Prescott's book entitled "The Speaking Telephone, Talking Phonograph and other Novelties," and state whether you ever before read what there is on those pages, purporting to be the official report of an instrument exhibited by Mr. Bell, at the Centennial exhibition, signed by Sir William Thomson and others?

Ans. I think this is the first time I ever read consecutively either the official report or what purported to be, of Sir William Thomson, regarding Professor Bell's exhibit at the Centennial. I have seen statements in the newspapers of a somewhat similar character; and I call to mind particularly an extract from Sir William Thomson's address after he went back to Europe.

Cross-Int. 122. When did you first see such statements and extracts?

Ans. The first that I recollect now was contained in the before-

2926

mentioned address of Sir William Thomson. This I saw some time in the fall of 1876; I cannot fix the date accurately.

Cross-Int. 123. Will you look at page 21, printed reports and awards, group 25, of the Centennial exhibition? State whether you ever before saw what is contained in that page, with reference to Professor Bell's exhibits, either in this book or any other publication, or any part of it; and, if so, when you first saw it.

Ans. I did not see it in the book above mentioned, and I cannot swear that I ever saw that article in any publication. I have seen newspaper extracts that read in a somewhat similar manner, and my recollection is that I saw something of the kind late in the fall of 1876, or in the winter of 1876–7.

Cross-Int. 124. Did you, about the time that you saw Professor Bell's apparatus at the Centennial exhibition, call on Professor Bell at his rooms, and converse with him on the subject of the speaking telephone?

Ans. I remember going with Professor Bell to his room, I think the evening before the exhibition; about this I am not sure. I remember a general conversation we had on various subjects, among others, the multiple telegraph, and I remember Professor Bell spoke to me about some experiments that he had made that pointed towards a speaking telephone. I also, at this time, spoke to Professor Bell about my proposed mode of accomplishing the same result, as set forth in my caveat. I do not remember that I mentioned the caveat, neither do I remember with what detail I described it to him.

Cross-Int. 125. Did you, after the exhibition of Professor Bell's instrument at which you were present, call upon Professor James C. Watson, one of the judges, and have conversation with him in reference to what Professor Bell had exhibited, and the results which had been observed that day by Mr. Watson and others, relating to the speaking telephone?

Ans. I never called upon Professor Watson in my life. I met him incidentally a number of times in and around the Centennial building both before and after the exhibition. I have an indistinct recollection of meeting him one day somewhere in the Centennial building, and that there was some general conversation on the subject of Professor Bell's exhibition. Professor Barker was with me, I remember,

2927

and, as I recollect it, he and Watson did most of the talking; but I have no distinct recollection of what was said by any of us at that interview.

Cross-Int. 126. Will you look at an article entitled "The Telephone," and signed James C. Watson, commencing on the ninety-fifth page of the periodical "Nature," of the issue of December 5, 1878, and state if you have ever before read that article or any part of it, either in "Nature" or anywhere else?

Ans. I have read the article, both in "Nature" and two or three newspapers which had copies of the article, and I have also read it in a handbill purported to be published by the Bell Telephone Company.

Cross-Int. 127. Will you look at that part of the article which purports to give the conversation between yourself and Professor Watson, and state whether you at any interview said to him what it is there stated you did, or anything substantially like it?

Ans. According to this report, Professor Watson says, "The news of these successful experiments soon circulated freely, and the day following, or possibly two days afterward, Mr. Gray came to me and inquired whether the reports of our success with Bell's telephone were correct." I have no recollection of asking Professor Watson regarding their success with Bell's telephone. I did not need to ask him, as I was present at both of the exhibitions he has named, and took part in the first one, as I before stated. At the second one, in the judges' hall, I remember meeting Sir William Thomson as he came out from that exhibition, and he named to me a certain sentence which he had heard, which I still remember. The report further says, "And, upon receiving from me an affirmative reply, he said that it was impossible, that we had been deceived in some way, that the transmission was by actual metallic contact through the wire, and that it was, to use his own words, 'nothing more than the old lovers' telegraph.'" If he means to say that I said that the electrical transmission of articulate speech was impossible, I did not say it. I may have said, although I have no recollection of it whatever, that I thought it would be impossible to make a practical working speaking telephone on the principle shown by Professor Bell, to wit: generating electric currents with the power of the voice, as

it seemed to me then that the vibrations were so slight in amplitude and the inductor necessarily so light that the currents thus generated would be too feeble for practical purposes; the fact that such motion in a magnetic field, with an inductor of sufficient size, would produce magneto-electro currents, was not new to me at that time. I do not know what he can mean by "actual metallic contact through the wire," as it conveys no intelligent idea to my mind. I suppose, however, he had reference to the lovers' telegraph. He says he quotes my own words, and he has put in quotation marks, "nothing more than the old lovers' telegraph." I could not have used those words, because I did not at that time know by that name the apparatus now known by that name. I remember distinctly when I first heard it: it was in the fall of 1876, on the second floor of the Western Union building, New York. The apparatus was sold on the streets at that time, and a gentleman who was assisting me bought a set for me. When he brought them in he told me what it was called on the street, — "the lovers' telegraph." I afterwards remember seeing the same name on the handbills of the dealers. I remember saying to Professor Barker that if the wires connecting the transmitter and receiver of Professor Bell's apparatus were properly suspended, so that they made no contact with any solid substance between the two instruments, that the result might possibly be obtained by mechanical transmission through the wire. I may have said so in the presence of Professor Watson, although I do not now recollect it. I have above said that I did not say that the electrical transmission of articulate speech was impossible. I could not have said it, because I knew not only from my own experiments, but from what I heard on Professor Bell's instrument at the first exhibition, I believed then and have ever since, that the results I obtained were due to electrical transmission, and not mechanical.

[*Adjourned to Monday, April* 7, *at* 10.30 *A. M.*]

NEW YORK, April 7, 1879, 10.30 A. M.

Cross-Int. 127*a*. Will you look at the report of the judges previously referred to on pages 20 and 21, and on pages 131 and 132, and state whether the articles on those pages, so far as they relate to

2929

your inventions, are, either or both of them, the report or reports which were sent to you from the judges?

Ans. The report on pages 20 and 21 I should say was a brief abstract of the full report found on pages 131 and 132. I believe this latter to be the same as contained in the official report sent to me. I cannot be positive as to exact wording, without reference to that report.

Cross-Int. 128. Will you look at pages 13 and 196, and state if you find to whom the respective articles are attributed as the authors?

Ans. The article first referred to, on pages 20 and 21, is part of a general article entitled "Electrical Apparatus," by Joseph Henry, LL. D. By reference to page 196 I find the following: "The figures annexed to the names of the judges indicate the reports written by them respectively." Referring back to page 131, report No. 4 would be accredited to Sir William Thomson.

Cross-Int 129. Will you look at page 21, at Prof. Henry's general report, and state whether you find the article relating to your invention, followed by one relating to the invention of Mr. Bell, forming a part of the same general report?

Ans. I find on page 21 a reference and short description of an invention which the writer claims to be that of Mr. Bell.

Cross-Int. 130. Will you state whether these two articles are embraced under one specific heading or title on page 20, and if so, what that title is?

Ans. I find on page 20 a heading which reads, "The Electric Telephone and Multiple Telegraph," and I find the two articles above referred to embraced under that heading.

Cross-Int. 131. Will you look at pages 130 and 131, same volume, and state whether you find there a report relating to Professor Bell's exhibit at the Centennial; and if so, to whom the authorship of that is attributed?

Ans. I find on pages 130 and 131 of the volume referred to a report of Professor Bell's exhibit at the Centennial. By reference to page 196, I find this report accredited to Sir William Thomson.

Cross-Int. 132. Will you look and see if that report is the same

as that of the article in Prescott's book, pages 92 and 93, to which your attention has already been called?

Ans. I find a portion of that report quoted in Prescott's book; and beginning about the middle of the report, it is quoted word for word, for a number of sentences, the balance being simply a brief abstract.

[*Complainants offer in evidence the article on pages* 20 *and* 21 *of Professor Henry's report, under the title of* "*The Electric Telephone and Multiple Telegraph*," *marked* "*Complainants' Exhibit No.* 10, *W. C. W., Ex'r.*"

Also the article No. 3, *same volume, on pages* 130 *and* 131, *under the title* "*Alexander Graham Bell, Salem, Mass., U. S.*," *marked* "*Complainants' Exhibit No.* 11, *W. C. W., Ex'r.*"

Also the article in same volume, pages 131 *and* 132, *No.* 4, *under the head,* "*Elisha Gray and Samuel Stockton White, Chicago, Illinois, U. S., marked* "*Complainants' Exhibit* 12, *W. C. W., Ex'r.*"]

[*The use in evidence of the three printed articles just above mentioned and offered in evidence by the complainants, is objected to.*]

Cross-Int 133. In the fifty-ninth direct interrogatory, you were asked to state how you were occupied in the year 1876, and down to October, 1877, etc. State whether or not, in addition to what you stated in your answer to that interrogatory as to your occupation during those years, you delivered a lecture on the 27th of February, 1877, at McCormick's Hall, Chicago, at which you exhibited sundry inventions of your own, and explained their character.

Ans. I did deliver such a lecture, making such exhibitions, in McCormick's Hall, Chicago, on or about the date mentioned.

Cross-Int. 134. State whether or not, in the course of that lecture, you made any reference to Professor Bell, and his invention of the speaking telephone.

Ans. I did make reference to Professor Bell, and I explained his invention, as I have heretofore described as his, in my direct examination; to aid in which, I used diagrams and had a pair of instruments on the stage not in circuit, constructed on the same principle.

Cross-Int. 135. When and by whom were those instruments constructed?

2931

Ans. My recollection is, they were made perhaps a month previous to the lecture, by a workman in the shops of the Western Electric Manufacturing Company, by the name of DeHondt. The instruments were owned by him, and I borrowed them for that occasion.

Cross-Int. 136. Will you look at the copy of the Chicago Tribune which I now hand you, dated February 20, 1877, and state whether you find in it, under the head of "The Telephone," a report of that lecture; and if so, whether it is substantially a correct report of that lecture, so far as it goes?

Ans. I find in that paper what purports to be a report of a lecture delivered by me at McCormick Hall; but I cannot say that it is a correct report, except in a very general sense. It seems to be a brief synopsis of the impressions made upon the reporter's mind at the time, and is not in any sense a *verbatim* report, except, perhaps, in the case of a few detached sentences.

[*Complainants offer in evidence said report, and it is marked "Complainants' Exhibit No.* 13, *W. C. W., Ex'r.*"]

[*Objected to.*]

Cross-Int. 137. Did you, before delivering that lecture, have any correspondence with Professor Bell in respect to the lecture and to the exhibition of his invention of the speaking telephone?

Ans. I wrote him two letters about that time, I think both of them before the lecture; and I remember the first one had reference to the exhibition of his invention at that lecture.

Cross-Int. 138. Will you look at the letter I now hand you, and state whether or not it is the first letter which you sent to him?

Ans. It is the first letter.

Cross-Int. 139. Will you read it to the magistrate, to be taken down by him in answer to this question?

Ans. I will. It is as follows: —

"CHICAGO, February 21, 1877.

"PROFESSOR A. G. BELL:

"*My Dear Sir,* — I gave a lecture in McCormick Hall, this city, Tuesday evening, 27th inst., on the *Telephone*, as *I* have developed it. I also connect with Milwaukee, and have tunes and telegraphing

done from there. I should like to explain and exhibit your method of transmitting vocal sounds as well, but do not feel at liberty to do *more* without permission from you. I should explain it as *your* method and not mine, although the *office* records show a description of the talking telegraph filed by me the *same* day yours was filed. The description is substantially the same as yours. I was unfortunate in being an hour or two behind you. There is no evidence that either knew that the other was working in this direction.

"With our facilities, I can get up an apparatus on a day's notice that will answer. I have a copy of your last patent. Please telegraph at my expense, on receipt of this, yes or no, and I will act accordingly.

"Yours truly,

"ELISHA GRAY,

"220 Kinsey Street, Chicago.

"I send this care Mr. Hayes, as I do not know your address. I received a line from you through Mr. Baldwin, for which please accept thanks."

Cross-Int. 140. I notice that in this letter you request Mr. Bell to telegraph you in reply; state whether or not he did so.

Ans. He did.

Cross-Int. 141. Have you got his reply? If so, will you please read it?

Ans. It is as follows: —

"BOSTON, Feb. 24, 1877.

"ELISHA GRAY,

Western Electric M'f'g Co.:

"If you refute in your lecture, and in the Chicago Tribune, the libel upon me published in that paper February sixteenth, I shall have no objection. Please answer.

"A. GRAHAM BELL."

Cross-Int. 142. Did you reply to that telegram?

Ans. I did.

Cross-Int. 143. Will you look at the letter I now hand you and state whether it is the one you sent in reply to the despatch, and if so, read it to the magistrate as a part of your answer?

2933

Ans. It is. It is as follows: —

"CHICAGO, Feb. 24, 1877.

"PROF. A. G. BELL:

"*Sir*, — Your telegram received. In answer, I would say, first, that I do not know what article you refer to, but will see the paper of that date. I have seen one or two articles lately that venture to assume that you are not the only man in the world who had contributed to the development of the telephone. If such assertions are '*libels*,' then you have been *libelled*. So far as I know, the 'libels' are mostly on the other side, if assertions of originality, etc., may be so considered. The papers here have been full of articles, of late, copied from Boston papers, claiming the whole development of the telephone for you. It would not be strange if some one, knowing the facts, should speak, and in doing so may have done you injustice.

"You seem to assume that I am responsible for all the newspaper articles that are not in your favor. I assert here that I have never said a word about you in the public prints, and I have always — even to the degree of offending some of my friends — defended you when I have heard disparaging remarks made about you. And since I made your acquaintance I have taken the ground that we were both independent inventors. Now, if we are going into the refutation business I suggest that it be mutual. So far as I know, there is quite as much needed from your side as from mine. I am always willing to correct any wrong done you, even although I am not responsible. If we undertake to follow up the newspapers we will have our hands full. I shall not show your apparatus, as I do not want any conditions imposed until I know what I am expected to refute. I do not know but that it is to deny all claim to the invention. Allow me to suggest that your telegram was just a little indiscreet, as it contained an assumption very unjust to me.

"I do not know your address, so I send through Mr. Hayes.

"Yours truly,

"E. GRAY.

"P. S. — You should have sent your despatch collect, as I requested it sent."

2934.

Cross-Int. 144. In this letter you say, near its commencement, "I do not know what article you refer to, but will see the paper of that date." Did you examine the paper and ascertain what the article was?

Ans. I believe I did.

Cross-Int. 145. Will you look at the date of the copy of the Chicago Tribune, which I now hand you, of the date of February 16, 1877, and state if you find in it the article which you suppose to be referred to by Professor Bell? And if so, point out to the magistrate and allow him to copy it as part of the answer.

Ans. I find an article in the personal column of the Chicago Tribune, of the date above referred to, an article that I supposed to be the one referred to by Professor Bell in his telegram. It is as follows: —

"Many of the Eastern newspapers are favoring their readers with sketches of Prof. A. M. Bell, 'the inventor of the telephone.' Meanwhile the real inventor of the telephone — Mr. Elisha Gray, of Chicago — minds his own business and apparently concerns himself not at all about the spurious claims of Professor Bell. Persons acquainted with the subject need not be informed that Mr. Gray's claims are incontrovertible. Science long since recognized them. They were established in the columns of the Tribune years ago, before Prof. Bell was so much as heard of. They are officially approved in the Patent Office at Washington, and they have already brought in large returns in money as well as in reputation to the inventor. Talking by telegraph and other sport of that description Mr. Gray has not paid much attention to as yet, because there is no present indication in it of anything more than sport; but the principles involved in it were discussed by him, and have all been used by him in a practical manner."

Cross-Int. 146. Did you receive from Professor Bell a reply to your second letter? If so, will you produce it and read it as a part of your answer?

Ans. I did. It is as follows: —

2935

"BOSTON UNIVERSITY, March 2, 1877.

"ELISHA GRAY, ESQ., CHICAGO:

"*My Dear Sir*, — I was somewhat hasty, I must confess, in sending my telegram, for of course you are not responsible for all the ill-natured remarks that may appear in the newspapers concerning me.

"I am sorry that my telegram should have prevented you from making the experiments you desired, for it is my sincere desire to oblige you in any way I can. I am glad that you are willing to do me justice, and must thank you for saying a good word for me occasionally. I may say that it has uniformly been my custom to make honorable mention of your name in multiple telegraphy, and to give you the credit of being an independent inventor.

"I have not generally alluded to your name in connection with the invention of the Electric 'Telephone,' for we seem to attach different significations to the word. I apply the term only to an apparatus for transmitting the voice (which meaning is strictly in accordance with the derivation of the word), whereas you seem to use the term as expressive of any apparatus for the transmission of *musical* tones by the electric current.

"I have no knowledge of any apparatus constructed by you for the purpose of transmitting vocal sounds, and I trust that I have not been doing you an injustice. It is my sincere desire to give you all the credit that I feel justly belongs to you.

"I do not know the nature of the application for a caveat, to which you have referred as having been filed two hours after my application for a patent, excepting that it had something to do with the vibration of a wire in water, and therefore conflicted with my patent. My specification had been prepared *months* before it was filed, and a copy had been taken to England by a friend. I delayed the filing of the American patent until I could hear from him. At last the protests of all those interested in my invention, deprecating further delay, had their effect, and I filed my application without waiting for a conclusion of negotiations in England. It was certainly a most striking coincidence that our applications should have been filed on the same day.

2936

"I have been kept so busy during the past few days correcting the examination papers of my normal school, that I have been unable to write.

"In haste,

"Yours truly,

"ALEXANDER GRAHAM BELL."

Cross-Int. 147. Will you look now to the letter I hand you, and state whether you sent it to Professor Bell in answer to a letter from him, which you have just produced; and if so, will you read it as a part of your answer?

Ans. I did. It is as follows: —

"CHICAGO, March 5, 1877.

"PROF. BELL:

"*My Dear Sir*, — I have just received yours of the 2d inst., and I freely forgive you for any feeling your telegram had aroused. I found the article I suppose you refer to, in the personal column of the 'Tribune,' and am free to say it does you injustice.

"I gave you full credit for the talking feature of the telephone, as you may have seen in the Associated Press despatch that was sent to all the papers in the country, in my lecture in McCormick Hall, Feb. 27. There were four different papers represented at the lecture, but only one, — the *Tribune*, — alluded to my mention of you, except the 'Press' despatch. I described your apparatus, at length, by diagram.

"Of course you have had no means of knowing what I had done in the matter of transmitting vocal sounds. When, however, you see the specification, you will see that the fundamental principles are contained therein. I do not, however, claim even the credit of inventing it, as I do not believe a mere description of an idea that has never been *reduced* to *practice*, — in the *strict sense* of that phrase, — should be dignified with the name invention.

"Yours very truly,

"ELISHA GRAY."

Cross-Int. 148. I find in the certified copies of the file wrapper, contents and drawings of the three applications for patents made by you

2937

on the 29th October, 1877, which have been put in evidence, that letters of the same date were sent by your attorneys to the Commissioner, requesting that a model in each case may be temporarily dispensed with. Why was that request made?

Ans. I had forgotten that such request had been made, and I am unable to recall now, except that I have a faint recollection that the models were not ready at the time of the filing of the applications.

Cross-Int. 149. Do you mean that they were not constructed or completed?

Ans. Yes, sir; I mean that the instruments we wished to file in the office were probably not completed. I do not mean by this that none of them were ever made before, or instruments substantially like them.

Cross-Int. 150. In constructing the instruments represented in your caveat, on which the diaphragms are stretched, what material would you judge it best to use in order to secure the best results?

Ans. I should have but very little choice in the selection of material farther than this: To get the best results, I would endeavor to prevent exciting vibrations in either the transmitting or receiving diaphragm, other than those excited in the air by the utterance of any given word or sound. To prevent this, it is best to use a material that will not too readily take up the vibrations of the diaphragm. I would name as one very good substance, vulcanized rubber, as being better either than wood or metal; but the difference is not sufficient to destroy practically the working qualities of the instrument.

Cross-Int. 151. Will you look at Mr. Prescott's book, which has been previously referred to by you? State whether you wrote that part of it commencing on page 183 with the words, "In the following pages," and extending to the passage on page 205, closing with the words, "by means of electricity," or any part of it?

Ans. So far as I can judge, without actual comparison, I should say that this was copied from some of my writings.

Cross-Int. 152. When and where was it first published?

Ans. I think the first publication of this particular article appeared in this book, — Prescott's.

Cross-Int. 153. When was it written?

2738

Ans. To the best of my recollection, part of it was written some time prior to February 14, 1876. Part of it was not written till the winter or spring of 1877.

Cross-Int. 154. What part of it was written prior to February 14, 1876, and when was such part written?

Ans. The part beginning on page 202, the part entitled Gray's Specification, February 14, 1876. My answer assumes that this is an exact copy of my caveat, but I have not compared the two to see that it is perfectly accurate. It was written, I think, a few days before the date above mentioned, but I cannot definitely fix the time at this moment.

Cross-Int. 155. Will you look at the pamphlet I now hand you, entitled "Journal of the American Electrical Society," published in 1875, Vol. I., No. 1, and state whether or not you wrote the article commencing on page 3 and extending to page 15; and if so, when you wrote it?

Ans. I wrote the article, substantially as it appears here, about the time it purports to have been delivered, March 17, 1875. I afterwards revised it for publication some time prior to the issue of the journal; to the best of my recollection, it was the following fall.

Cross-Int. 156. State if you remember whether the second and third numbers of that journal contained articles under your name, which were written by you?

Ans. I remember having written two other articles which appeared in subsequent issues of the same journal.

[*Adjourned to Tuesday, April 8, at 10.30 A. M.*]

NEW YORK, April 8, 1879, 10.30 A. M.

[*The witness,* ELISHA GRAY, *continues his answer to one hundred and fifty-sixth cross-question:*]

Since yesterday I have looked at the articles referred to in Nos. 2 and 3 of the said journal, being articles bearing my name, and identify them as articles of my composition.

Direct Examination resumed.

Int. 157. In your answer to the eighty-third cross, you say, "I have always understood that any instrument or apparatus capable of

2939

transmitting sound to a distance, was properly called by the name telephone." Do you include here under the term "sound," musical or other inarticulate tones, as well as articulate speech?

Ans. I do.

Int. 158. Has the word "telephone" been commonly used among scientific men, in this broad sense, for a time beginning previously to the invention in controversy in this case, and will you give such illustrations of that fact as occur to you?

Ans. It has. And as one illustration, I call to mind a description of what is called the Reiss telephone, which will be found in a little work on electricity, by Ferguson, at pages 257 and 258. A reproduction of the cut of this apparatus, substantially as described in the above book, was published some years since, prior to 1874, in the "Manufacturer and Builder." It was also published in "The Telegrapher" at an early date.

Int. 159. Will you look at the application of Mr. Bell, which is referred to in the first one of the patents in suit in this case as a pending application of his, dated February 25, 1875 (a copy of which is in evidence, marked "Defendant's Exhibit A"), and state to what sort of an apparatus you there find him applying the word "telephone"?

Ans. I understand the apparatus referred to by Professor Bell, in the application named, to be such an one as was to be found among the philosophical apparatus of almost any first-class college, and it was a modification of the Reiss telephone receiver, and was commonly called Wertheim's apparatus. It consisted of an iron rod from two to three feet long, perhaps a quarter of an inch in diameter, and when used was passed into an ordinary helix. When in operation, it was placed in circuit with some vibrating circuit breaker, as a transmitter, usually vibrating at a very slow rate, and is used to demonstrate the general fact that a bar of iron elongated under magnetization, and also produced a noise at the moment of magnetization or demagnetization. Professor Bell, in his application of February 25, 1875, proposes to use it as a receiver, in connection with the transmitter, which, in general, may be described as an ordinary vibrating electrotome or reed.

Int. 160. Is the apparatus described in this application of Feb-

2940

ruary 25, 1875, an apparatus for sending telegraphic signals over a single wire, an intermittent current being produced by a vibratory make and break?

Ans. It is an apparatus designed to transmit telegraphic signals, and an intermittent current is produced by an actual make and break of the circuit by the vibrator of the transmitter.

Int. 161. You have spoken on your cross examination of a multiple telegraph which was exhibited at the Centennial in 1876 by Mr. Bell. Please describe it.

Ans. As I remember the apparatus, the transmitting portion of it was very similar to the transmitter shown in Professor Bell's application of Februrry 25, 1875. The receiver was substantially the same as shown in that application, with the addition of an arrangement for operating a local circuit, the whole instrument being substantially as shown on page 59 of Prescott's book on the speaking telephone and phonograph. There were two transmitters and two receivers connected in circuit on the same table. I do not know how the circuits were connected with the instruments in detail, and neither can I swear that the instruments were exact reproductions of the cuts I have referred to.

Int. 162. By consent of the counsel for the complainants, I will ask you if you gave an exhibition of the use of your key-board musical transmitter with the concave metallic diaphragm receiver, or with the resonant box magnet receiver, at your dwelling-house, in or near Chicago, before going to Europe in August, 1874. If so, state what apparatus was used, by whom, how, with what results, and what number of persons were present.

Ans. I did. The apparatus I used on that occasion was the two-octave multiple transmitter, now in evidence, the concave metallic diaphragm magnet receiver, a duplicate of which is now in evidence, and the violin animal tissue receiver, now in evidence. The transmitter was placed in the dining room of the house, and the receivers were placed in the parlor, having the doors closed between. A wire connected the transmitter with the receiver, forming a closed circuit, in which was included a battery, the connections being the same as have been heretofore described. A number of tunes were transmitted from the transmitter to the receiver, and most of the time my

2941

wife did the playing while I presided at the receiving end. The results were entirely satisfactory, so that all in the room could hear the tunes that were received, and there were from thirty to fifty persons present. This was the evening before I left home to go to Europe.

Int. 163. Do you know whether any model was filed at the Patent Office with the application for Mr. Bell's patent of March 7, 1876, in suit?

Ans. I don't know.

ELISHA GRAY.

Attest: W. C. WITTER, *Examiner.*

[*Counsel for defendant puts in evidence a certified copy of the correspondence found in file, in the matter of the Letters Patent granted Alexander G. Bell, March* 7, 1876, *No.* 174,465, *for telegraphy; and the same is marked "Exhibit Bell and Patent Office Correspondence, W. C. W., Ex'r."*

The counsel for defendant admits that in an exhibition given by Mr. Elisha Gray in the city of New York, April 2, 1877, *Mr. Gray said substantially as is reported in the New York Tribune, of the following day, thus:*]

"After the first part of the programme had been executed, Mr. Elisha Gray came forward and addressed the audience. He was aware that great confusion existed in the popular mind as to what this telephone could perform; in particular it had been confounded with the speaking telephone invented by Prof. A. Graham Bell, of Boston. Prof. Bell, Mr. Gray said, was present in the audience."

[*Adjourned.*]

2942

COMPLAINANTS' EXHIBIT 9, W. C. W., EX'R.

PROCEEDINGS
OF THE
AMERICAN ACADEMY
OF
ARTS AND SCIENCES.
VOL. XII.
PAPERS READ BEFORE THE ACADEMY.

I.

RESEARCHES IN TELEPHONY.

By A. Graham Bell.

Presented May 10, 1876, by the Corresponding Secretary.

1. It has long been known that an electro-magnet gives forth a decided sound when it is suddenly magnetized or demagnetized. When the circuit upon which it is placed is rapidly made and broken, a succession of explosive noises proceeds from the magnet. These sounds produce upon the ear the effect of a musical note, when the current is interrupted a sufficient number of times per second. The discovery of "Galvanic Music," by Page,* in 1837, led inquirers in different parts of the world almost simultaneously to enter into the field of telephonic research; and the acoustical effects produced by magnetization were carefully studied by Marrian,† Beatson,‡ Gassiot,§ De la Rive,‖ Matteucci,¶ Guillemin,** Wertheim,†† Wart-

* *C. G. Page.* "The Production of Galvanic Music." Silliman's Journ., 1837, XXXII., p. 396; Silliman's Journ., July, 1837, p. 354; Silliman's Journ., 1838, XXXIII., p. 118; Bibl. Univ. (new series), 1839 II., p. 398.

† *J. P. Marrian.* Phil. Mag., XXV., p. 382; Inst., 1845, p. 20; Arch. de l'Électr., V., p. 195.

‡ *W. Beatson.* Arch. de l'Électr., V., p. 197; Arch. de Sc. Phys. et Nat. (2d series), II., p. 113.

§ *Gassiot.* See "Treatise on Electricity," by De la Rive, I., p. 300.

‖ *De la Rive.* Treatise on Electricity, I., p. 300; Phil. Mag., XXXV., p. 422; Arch. de l'Électr., V., p. 200; Inst., 1846, p 83; Comptes Rendus, XX., p. 1287; Comp. Rend., XXII., p. 432; Pogg. Ann., LXXVI., p. 637; Ann. de Chim. et de Phys., XXVI., p. 158.

¶ *Matteucci.* Inst., 1845, p 315; Arch. de l'Électr., V., 389.

** *Guillemin.* Comp. Rend., XXII., p. 234; Inst., 1846, p 30; Arch. d. Sc. Phys. (2d series), I., p. 191.

†† *G. Wertheim.* Comp. Rend., XXII., pp. 336, 544; Inst., 1846, pp. 65, 100; Pogg.

BELL TELEPHONE COMPANY, -14

2943

mann,* Janniar,† Joule,‡ Laborde,§ Legat,‖ Reis,¶ Poggendorff,** Du Moncel,†† Delezenne,‡‡ and others.§§

2. In the autumn of 1874 I discovered that the sounds emitted by an electro-magnet under the influence of a discontinuous current of electricity are not due wholly to sudden changes in the magnetic condition of the iron core (as heretofore supposed), but that a portion of the effect results from vibrations in the insulated copper wires composing the coils. An electro-magnet was arranged upon circuit with an instrument for interrupting the current, — the rheotome being placed in a distant room, so as to avoid interference with the experiment. Upon applying the ear to the magnet a musical note was clearly perceived, and the sound persisted after the iron core had been removed. It was then much feebler in intensity, but was otherwise unchanged, — the curious crackling noise accompanying the sound being well marked.

The effect may probably be explained by the attraction of the coils of the wire for one another during the passage of the galvanic current and the sudden cessation of such attraction when the current is interrupted. When a spiral of fine wire is made to dip into a cup of mercury, so as thereby to close a galvanic circuit, it is well

---

Ann., LXVIII., p. 140; Comp. Rend., XXVI., p. 505; Inst., 1848, p. 142; Ann. de Chim. et de Phys., XXIII., p 302; Arch. d. Sc. Phys et Nat , VIII., p. 206; Pogg. Ann , LXXVII., p. 43; Berl. Ber., IV., p. 121.

* *Elie Wartmann.* Comp. Rend., XXII., p 544; Phil. Mag. (3d series), XXVIII., p. 514; Arch d. Sc. Phys et Nat. (2d series), I., p. 419; Inst., 1846, p. 280; Monatscher. d. Berl. Akad., 1846, p. 111.

† *Janniar.* Comp. Rend., XXIII., p. 319; Inst., 1846, p. 269; Arch. d. Sc. Phys. et Nat. (2d series) II , p. 394.

‡ *J. P. Joule.* Phil. Mag., XXV., pp 76, 225; Berl. Ber., III., p. 489.

§ *Laborde.* Comp. Rend., L., p. 692; Cosmos, XVII., p. 514.

‖ *Legat.* Brix. Z. S., IX., p. 125.

¶ *Reis.* "Téléphonie." Polytechnic Journ., CLXVIII., p. 185; Böttger's Notizbl., 1863, No. 6.

** *J. C. Poggendorff.* Pogg. Ann., XCVIII., p. 192; Berliner Monatsber., 1856, p. 133; Cosmos, IX., p. 49; Berl. Ber., XII , p 241; Pogg. Ann., LXXXVII., p. 139.

†† *Du Moncel.* Exposé, II., p. 125; also, III., p. 83.

‡‡ *Delezenne.* "Sound produced by Magnetization," Bibl. Univ. (new series), 1841, XVI., p. 406.

§§ See London Journ., XXXII., p. 402; Polytechnic Journ., CX., p. 16; Cosmos, IV., p. 43; Glösener —— Traité général, &c., p. 350; Dove.-Repert., VI., p. 58; Pogg. Ann., XLIII., p. 411; Berl. Ber., I , p. 144; Arch. d. Sc. Phys. et Nat., XVI., p 406; Kuhn's Encyclopædia der Physik, pp. 1014–1021.

2944

known that the spiral coils up and shortens. Ferguson* constructed a rheotome upon this principle. The shortening of the spiral lifted the end of the wire out of the mercury, thus opening the circuit, and the weight of the wire sufficed to bring the end down again, — so that the spiral was thrown into continuous vibration. I conceive that a somewhat similar motion is occasioned in a helix of wire by the passage of a discontinuous current, although further research has convinced me that other causes also conspire to produce the effect noted above. The extra currents occasioned by the induction of the voltaic current upon itself in the coils of the helix no doubt play an important part in the production of the sound, as very curious audible effects are produced by electrical impulses of high tension. It is probable, too, that a molecular vibration is occasioned in the conducting wire, as sounds are emitted by many substances when a discontinuous current is passed through them. Very distinct sounds proceed from straight pieces of iron, steel, retort-carbon, and plumbago. I believe that I have also obtained audible effects from thin platinum and German-silver wires, and from mercury contained in a narrow groove about four feet long. In these cases, however, the sounds were so faint and outside noises so loud that the experiments require verification. Well-marked sounds proceed from conductors of all kinds when formed into spirals or helices. I find that De la Rive had noticed the production of sound from iron and steel during the passage of an intermittent current, although he failed to obtain audible results from other substances. In order that such effects should be observed, extreme quietness is necessary. The rheotome itself is a great source of annoyance, as it always produces a sound of similar pitch to the one which it is desired to hear. It is absolutely requisite that it should be placed out of earshot of the observer, and at such a distance as to exclude the possibility of sounds being mechanically conducted along the wire.

3. Very striking audible effects can be produced upon a short circuit by means of two Grove elements. I had a helix of insulated copper-wire (No. 23) constructed, having a resistance of about

* *Ferguson.* Proceedings of Royal Scottish Soc. of Arts, April 9, 1866; Paper on "A New Current Interrupter."

AMERICAN BELL TELEPHONE COMPANY, -14

2945

twelve ohms. It was placed in circuit with a rheotome which interrupted the current one hundred times per second. Upon placing the helix to my ear I could hear the unison of the note produced by the rheotome. The intensity of the sound was much increased by placing a wrought-iron nail inside the helix. In both these cases, a crackling effect accompanied the sound. When the nail was held in the fingers so that no portion of it touched the helix, the crackling effect disappeared, and a pure musical note resulted.

When the nail was placed inside the helix, between two cylindrical pieces of iron, a loud sound resulted that could be heard all over a large room. The nail seemed to vibrate bodily, striking the cylindrical pieces of metal alternately, and the iron cylinders themselves were violently agitated.

4. Loud sounds are emitted by pieces of iron and steel when subjected to the attraction of an electro-magnet which is placed in circuit with a rheotome. Under such circumstances, the armatures of Morse-sounders and Relays produce sonorous effects. I have succeeded in rendering the sounds audible to large audiences by interposing a tense membrane between the electro-magnet and its armature. The armature in this case consisted of a piece of clock-spring glued to the membrane. This form of apparatus I have found invaluable in all my experiments. The instrument was connected with a parlor organ, the reeds of which were so arranged as to open and close the circuit during their vibration. When the organ was played, the music was loudly reproduced by the telephonic receiver in a distant room. When chords were played upon the organ, the various notes composing the chords were emitted simultaneously by the armature of the receiver.

5. The simultaneous production of musical notes of different pitch by the electric current was foreseen by me as early as 1870, and demonstrated during the year 1873. Elisha Gray,* of Chicago, and Paul la Cour,† of Copenhagen, lay claim to the same discovery. The fact that sounds of different pitch can be simultaneously produced upon any part of a telegraphic circuit is of great practical importance; for the duration of a musical note can be made to

* *Elisha Gray.* Eng. Pat. Spec., No. 974. See "Engineer," March 26, 1875.
† *Paul la Cour.* Telegraphic Journal, Nov. 1, 1875.

signify the dot or dash of the Morse alphabet, and thus a number of telegraphic messages may be sent simultaneously over the same wire without confusion by making signals of a definite pitch for each message.

6. If the armature of an electro-magnet has a definite rate of oscillation of its own, it is thrown bodily into vibration when the interruptions of the current are timed to its movements. For instance, present an electro-magnet to the strings of a piano. It will be found that the string which is in unison with the rheotome included in the circuit will be thrown into vibration by the attraction of the magnet.

Helmholtz,* in his experiments upon the synthesis of vowel sounds, caused continuous vibration in tuning-forks which were used as the armatures of electro-magnets. One of the forks was employed as a rheotome. Platinum wires attached to the prongs dipped into mercury.

The intermittent current occasioned by the vibration of the fork traversed a circuit containing a number of electro-magnets, between the poles of which were placed tuning-forks, whose normal rates of vibration were multiples of that of the transmitting fork. All the forks were kept in continuous vibration by the passage of the interrupted current. By re-enforcing the tones of the forks in different degrees by means of resonators, Helmholtz succeeded in reproducing artificially certain vowel sounds.

I have caused intense vibration in a steel strip, one extremity of which was firmly clamped to the pole of a U-shaped electro-magnet, the free end overhanging the other pole. The amplitude of the vibration was greatest when the coil was removed from the leg of the magnet to which the armature was attached.

7. All the effects noted above result from rapid interruptions of a voltaic current, but sounds may be produced electrically in many other ways.

The Canon Goltoin de Coma† in 1875 observed that noises were emitted by iron rods placed in the open air during certain electrical conditions of the atmosphere; Beatson‡ produced a sound from an

* *Helmholtz.* Die Zehre von dem Tonempfindungen.

† See "Treatise on Electricity," by De la Rive, I., p. 300. ‡ Ibid.

2947

iron wire by the discharge of a Leyden jar; Gore* obtained loud musical notes from mercury, accompanied by singularly beautiful crispations of the surface during the course of experiments in electrolysis; and Page† produced musical tones from Trevelyan's bars by the action of the galvanic current.

8. When an intermittent current is passed through the thick wires of a Ruhmkorff's coil, very curious audible effects are produced by the currents induced in the secondary wires. A rheotome was placed in circuit with the thick wires of a Ruhmkorff's coil, and the fine wires were connected with two strips of brass (A and B), insulated from one another by means of a sheet of paper. Upon placing the ear against one of the strips of brass, a sound was perceived like that described above as proceeding from an empty helix of wire during the passage of an intermittent voltaic current. A similar sound, only much more intense, was emitted by a tin-foil condenser, when connected with the fine wires of the coil.

One of the strips of brass A (mentioned above) was held closely against the ear. A loud sound came from A whenever the slip B was touched with the other hand. It is doubtful, in all these cases, whether the sounds proceeded from the metals or from the imperfect conductors interposed between them. Further experiments seem to favor the latter supposition. The strips of brass, A and B, were held one in each hand. The induced currents occasioned a muscular tremor in the fingers. Upon placing my forefinger to my ear, a loud crackling noise was audible, seemingly proceeding from the finger itself. A friend who was present placed my finger to his ear, but heard nothing. I requested him to hold the strips, A and B, himself. He was then distinctly conscious of a noise (which I was unable to perceive) proceeding from his finger. In these cases, a portion of the induced currents passed through the head of the observer when he placed his ear against his own finger; and it is possible that the sound was occasioned by a vibration of the surfaces of the ear and finger in contact.

When two persons receive a shock from a Ruhmkorff's coil by

---

* *Gore.* Proceedings of Royal Society, XII., p. 217.

† *Page.* "Vibration of Trevelyan's Bars by the Galvanic Current." Silliman's Journal, 1850, IX., pp. 105–108.

clasping hands, each taking hold of one wire of the coil with the free hand, a sound proceeds from the clasped hands. The effect is not produced when the hands are moist. When either of the two touches the body of the other, a loud sound comes from the parts in contact. When the arm of one is placed against the arm of the other, the noise produced can be heard at a distance of several feet. In all these cases, a slight shock is experienced so long as the contact is preserved. The introduction of a piece of paper between the parts in contact does not materially interfere with the production of the sounds, while the unpleasant effects of the shock are avoided.

When a powerful current is passed through the body, a musical note can be perceived when the ear is closely applied to the arm of the person experimented upon. The sound seems to proceed from the muscles of the forearm, and from the biceps muscle. The musical note is the unison of the rheotome employed to interrupt the primary circuit. I failed to obtain audible effects in this way when the pitch of the rheotome was high. Elisha Gray * has also produced audible effects by the passage of induced electricity through the human body. A musical note is occasioned by the spark of a Ruhmkorff's coil when the primary circuit is made and broken sufficiently rapidly. When two rheotomes of different pitch are caused simultaneously to open and close the primary circuit, a double tone proceeds from the spark.

9. When a voltaic battery is common to two closed circuits, the current is divided between them. If one of the circuits is rapidly opened and closed, a pulsatory action of the current is occasioned upon the other.

All the audible effects resulting from the passage of an intermittent current can also be produced, though in less degree, by means of a pulsatory current.

10. When a permanent magnet is caused to vibrate in front of the pole of an electro-magnet, an undulatory or oscillatory current of electricity is induced in the coils of the electro-magnet, and sounds proceed from the armatures of other electro-magnets placed upon the circuit. The telephonic receiver referred to above (par. 4) was connected in circuit with a single-pole electro-magnet, no battery

* *Elisha Gray.* Eng. Pat. Spec., No. 2646. See "Engineer," Aug. 14, 1874.

2949

being used. A steel tuning-fork which had been previously magnetized was caused to vibrate in front of the pole of the electro-magnet. A musical note, similar in pitch to that produced by the tuning-fork, proceeded from the telephonic receiver in a distant room.

11. The effect was much increased when a battery was included in the circuit. In this case, the vibration of the permanent magnet threw the battery-current into waves. A similar effect was produced by the vibration of an unmagnetized tuning-fork in front of the electro-magnet. The vibration of a soft iron armature, or of a small piece of steel spring no larger than the pole of the electro-magnet in front of which it was placed, sufficed to produce audible effects in the distant room.

12. Two single-pole electro-magnets, each having a resistance of ten ohms, were arranged upon a circuit with a battery of five carbon elements. The total resistance of the circuit, exclusive of the battery, was about twenty-five ohms. A drum-head of gold-beater's skin, seven centimetres in diameter, was placed in front of each electro-magnet, and a circular piece of clock-spring, one centimetre in diameter, was glued to the middle of each membrane. The telephones so constructed were placed in different rooms. One was retained in the experimental room, and the other taken to the basement of an adjoining house.

Upon singing into the telephone, the tones of the voice were reproduced by the instrument in the distant room. When two persons sang simultaneously into the instrument, two notes were emitted simultaneously by the telephone in the other house. A friend was sent into the adjoining building to note the effect produced by articulate speech. I placed the membrane of the telephone near my mouth, and uttered the sentence, "Do you understand what I say?" Presently an answer was returned through the instrument in my hand. Articulate words proceeded from the clock-spring attached to the membrane, and I heard the sentence, "Yes; I understand you perfectly."

The articulation was somewhat muffled and indistinct, although in this case it was intelligible. Familiar quotations, such as, "To be, or not to be; that is the question." "A horse, a horse, my kingdom

2950

for a horse." "What hath God wrought?" etc., were generally understood after a few repetitions. The effects were not sufficiently distinct to admit of sustained conversation through the wire. Indeed, as a general rule, the articulation was unintelligible, excepting when familiar sentences were employed. Occasionally, however, a sentence would come out with such startling distinctness as to render it difficult to believe that the speaker was not close at hand. No sound was audible when the clock-spring was removed from the membrane.

The elementary sounds of the English language were uttered successively into one of the telephones and the effects noted at the other. Consonantal sounds, with the exception of L and M, were unrecognizable. Vowel-sounds in most cases were distinct. Diphthongal vowels, such as *a* (in ale), *o* (in old), *i* (in isle), *ow* (in now), *oy* (in boy), *oor* (in poor), *oor* (in door), *ere* (in here), *ere* (in there), were well marked.

Triphthongal vowels, such as *ire* (in fire), *our* (in flour), *ower* (in mower), *ayer* (in player), were also distinct. Of the elementary vowel-sounds, the most distinct were those which had the largest oral apertures. Such were *a* (in far), *aw* (in law), *a* (in man), and *e* (in men).

13. Electrical undulations can be produced directly in the voltaic current by vibrating the conducting wire in a liquid of high resistance included in the circuit.

The stem of a tuning-fork was connected with a wire leading to one of the telephones described in the preceding paragraph. While the tuning-fork was in vibration, the end of one of the prongs was dipped into water included in the circuit. A sound proceeded from the distant telephone. When two tuning-forks of different pitch were connected together, and simultaneously caused to vibrate in the water, two musical notes (the unisons respectively of those produced by the forks) were emitted simultaneously by the telephone.

A platinum wire attached to a stretched membrane, completed a voltaic circuit by dipping into water. Upon speaking to the membrane, articulate sounds proceeded from the telephone in the distant room. The sounds produced by the telephone became louder when dilute sulphuric acid, or a saturated solution of salt, was substituted

2951

for the water. Audible effects were also produced by the vibration of plumbago in mercury in a solution of bichromate of potash, in salt and water, in dilute sulphuric acid, and in pure water.

14. Sullivan* discovered that a current of electricity is generated by the vibration of a wire composed partly of one metal and partly of another; and it is probable that electrical undulations were caused by the vibration. The current was produced so long as the wire emitted a musical note, but stopped immediately upon the cessation of the sound.

15. Although sounds proceed from the armatures of electro-magnets under the influence of undulatory currents of electricity, I have been unable to detect any audible effects due to the electro-magnets themselves. An undulatory current was passed through the coils of an electro-magnet which was held closely against the ear. No sound was perceived until a piece of iron or steel was presented to the pole of the magnet. No sounds either were observed when the undulatory current was passed through iron, steel, retort-carbon, or plumbago. In these respects an undulatory current is curiously different from an intermittent one. (See par. 2.)

16. The telephonic effects described above are produced by three distinct varieties of currents, which I term respectively intermittent, pulsatory, and undulatory. *Intermittent currents* are characterized by the alternate presence and absence of electricity upon the circuit; *Pulsatory currents* result from sudden or instantaneous changes in the intensity of a continuous current; and *undulatory currents* are produced by gradual changes in the intensity of a current analogous to the changes in the density of air occasioned by simple pendulous vibrations. The varying intensity of an undulatory current can be represented by a sinusoidal curve, or by the resultant of several sinusoidal curves.

Intermittent, pulsatory, and undulatory currents may be of two kinds, — *voltaic* or *induced;* and these varieties may be still further discriminated into *direct* and *reversed* currents; or those in which the electrical impulses are all positive or negative, and those in which they are alternately positive and negative.

---

* *Sullivan.* "Currents of Electricity produced by the vibration of Metals." Phil. Mag., 1845, p. 261; Arch. de l'Électr., X. p. 480.

Telephonic effects can be produced by means of currents of electricity, which are:—

- Intermittent.
  - Voltaic.
    - Direct (See par. 1, 2, 3, 4, 5, 6).
    - Reversed.
  - Induced.
    - Direct.
    - Reversed (See par. 8).
- Pulsatory.
  - Voltaic.
    - Direct (See par. 9).
    - Reversed.
  - Induced.
    - Direct.
    - Reversed.
- Undulatory.
  - Voltaic.
    - Direct (See par. 11, 12, 13, 15).
    - Reversed.
  - Induced.
    - Direct.
    - Reversed (See par. 10).

17. In conclusion, I would say that the different kinds of currents described above may be studied optically by means of König's manometric capsule.* The instrument, as I have employed it, consists simply of a gas-chamber closed by a membrane to which is attached a piece of clock-spring. When the spring is subjected to the attraction of an electro-magnet, through the coils of which a "telephonic" current of electricity is passed, the flame is thrown into vibration.

I find the instrument invaluable as a rheometer, for an ordinary galvanometer is of little or no use when "telephonic" currents are to be tested. For instance, the galvanometer needle is insensitive to the most powerful undulatory current when the impulses are reversed, and is only slightly deflected when they are direct. The manometric capsule, on the other hand, affords a means of testing the amplitude of the electrical undulations; that is, of deciding the difference between the maximum and minimum intensity of the current.

COMPLAINANTS' EXHIBIT 10.

General Report of Judges of Centennial Exhibition, Group XXV., pages 20 and 21.

THE ELECTRIC TELEPHONE AND MULTIPLE TELEGRAPH.

The idea of transmitting sounds to a distance by means of electrical currents has been for several years before the world, and the idea of extension of this to telegraphy was evident, though no one

* *König.* "Upon Manometric Flames," Phil. Mag., 1873, XLV., No. 297, 298.

2453

had thought it could lead to practical results. But the idea of a multiple electrophonic telegraph transmitting simultaneously several different musical notes for the simultaneous transmission of different messages by one wire, is an invention of high scientific character promising admirable practical results. For the honor of this invention there are two claimants, Mr. Elisha Gray, of Chicago, Illinois, and Mr. Alexander G. Bell, of Salem, Massachusetts. These inventions are independent of one another and different in the method of producing the result. In the telegraph of Mr. Gray several series of waves or impulses are simultaneously transmitted through a single wire. These impulses are excited by interruptions in the current produced by tuning-forks of different pitches, and excite, at the farther extremity of the line, corresponding variations in tuning-forks of the same pitch. Thus, if four or five tuning forks are vibrated at the same time at one end of a line, each will excite vibrations in its corresponding fork at the other end without affecting the other forks. The exhibitors of this telegraph inform the judges that they are now able to equip lines for actual business with a capacity for carrying, through one wire, eight messages simultaneously, and there is no reason why the number may not be increased to sixteen. This telegraph may be made self-recording, or may be worked forward by relays through greater lengths of line than the insulation allows in one circuit.

The telephone of Mr. Bell aims at a still more remarkable result, —that of transmitting audible speech through long telegraphic lines. In the improved instrument the result is produced with striking effect, without the employment of an electrical current other than that produced by the mechanical action of the impulse of the breath as it issues from the lungs in producing articulate sounds. To understand this wonderful result, suppose a plate of sheet iron, about five inches square, suspended vertically before the mouth of the speaker so as to vibrate freely by the motion of the air due to the speech, and suppose also another iron plate, of the like dimensions, similarly suspended before the ear of the hearer of the sound, and between these, but not in contact with them, is stretched the long telegraphic wire. Each end of this wire is attached to two coils of insulated wire surrounding a core of soft iron, the ends of which are

295K

placed near the middle of the plate, but not in contact with it. These four cores are kept in a magnetic condition by being attached at each end of the line to the two poles of a permanent magnet. Now it is evident that in this arrangement any disturbance of the magnetism of one of the permanent magnets increasing or diminishing it will induce electrical currents, which, traversing the long wire, will produce a similar disturbance of the magnetism of the arrangement at the other end of the wire. Such a disturbance will be produced by the vibration of the plate of soft iron due to the words of the speaker, and the current thus produced, changing the magnetism of the soft iron cores, will by reaction produce corresponding vibrations in the iron plate suspended before the ear of the hearer. The vibrations of the second plate being similar to those of the first will reproduce the same sounds. Audible speech has, in this way, been transmitted to a distance of three hundred miles, perfectly intelligible to those who have become accustomed to the peculiarities of certain of the sounds. All parts of a tune are transmitted with great distinctness and with magical effect.

This telephone was exhibited in operation at the Centennial Exhibition, and was considered by the judges the greatest marvel hitherto achieved by the telegraph. The invention is yet in its infancy, and is susceptible of great improvements.

COMPLAINANTS' EXHIBIT 11.

Reports on Awards, Group XXV., Centennial Exhibition, pages 130, 131.

3. ALEXANDER GRAHAM BELL, SALEM, MASS., U. S.

GRAHAM BELL'S ELECTRIC TELEPHONE AND MULTIPLE TELEGRAPH.

Report.—The idea of an electric telephone, or apparatus for transmitting sounds to a distance by variations of electric current through a wire, has been for many years before the world, and has been realized in several ways, differing considerably in details as to the appliances at two points of the circuit for producing the variations of electric current and for deriving perceptible effects from them. An extension of this idea to some kind of electro-phonetic telegraphy was inevitable, even though no one had thought it might

2955

or could lead to practically useful results. But the idea of a multiple electro-phonetic telegraphy, transmitting simultaneously several different musical notes, and using intermissions of these (like intermissions of currents in so many separate wires) for the simultaneous and independent transmission of different messages by one wire, is a very fine invention, of high scientific character, promising splendidly useful practical results.

This invention is claimed by Mr. Graham Bell, and he is entitled to full credit for it, even though, as I believe is the case, it has been also independently invented by others, both in England and America.

A very well worked-out realization of it is given in Mr. Bell's apparatus now exhibited. A great practical advantage of the electro-phonetic multiple telegraph over other methods of multiple telegraphy through one wire, is that no adjustment is required for varying conditions of the line to render the non-interference among the different messages perfect. Another even more important practical advantage is that it is indifferent between what points of the line and in which directions the different messages are being sent. The different messages can, in fact, be transmitted from any different points of the line, and each may be read at all other stations (whether stations from which others of the messages are being sent or not) with practically perfect non-interference. Another important advantage is that earth currents and lightning discharges will never disturb the signaling.

Mr. Graham Bell's apparatus includes an ingenious and effective instrument for automatically making and breaking an electric contact every time one of his telegraphic musical notes commences and ceases to sound. Thus his multiple telegraph may be made self-recording (after the Morse or Bain method), or may be worked forward by relay through greater lengths of line than imperfectness of the insulation allows to be worked in one circuit. Mr. Bell showed me in action two of these electro-phonetic relays, recording quite independently the transmission of independent messages by two musical notes in one wire. In addition to his electro-phonetic multiple telegraph, Mr. Graham Bell exhibits apparatus by which he has achieved a result of transcendent scientific interest, — the

ansmission of spoken words by electric currents through a telegraph wire. To obtain this result, or even to make a first step towards it, — the transmission of different qualities of sounds, such as the vowel sounds, — Mr. Bell perceived that he must produce a variation of strength of current in the telegraph wire as nearly as may be in exact proportion to the velocity of a particle of air moved by the sound; and he invented a method of doing so, a piece of iron attached to a membrane, and thus moved to and fro in the neighborhood of an electro-magnet, which has proved perfectly successful. The battery and wire of this electro-magnet are in circuit with the telegraph wire and the wire of another electro-magnet at the receiving station. This second electro-magnet has a solid bar of iron for core, which is connected at one end, by a thick disc of iron, to an iron tube surrounding the coil and bar. The free circular end of the tube constitutes one pole of the electro-magnet, and the adjacent free end of the bar-core, the other. A thin circular iron disc, held pressed against the end of the tube by the electro-magnetic attraction, and free to vibrate through a very small space without touching the central pole, constitutes the sounder by which the electric effect is reconverted into sound. With my ear pressed against this disc, I heard it speak distinctly several sentences, first of simple monosyllables, "To be or not to be" (marvelously distinct); afterwards sentences from a newspaper, "S. S. Cox has arrived" (I failed to hear the "S. S. Cox," but the "has arrived" I heard with perfect distinctness); then "City of New York," "Senator Morton," "The Senate has passed a resolution to print one thousand extra copies," "The Americans of London have made arrangements to celebrate the Fourth of July." I need scarcely say I was astonished and delighted; so were others, including some other judges of our Group, who witnessed the experiments and verified with their own ears the electric transmission of speech. This, perhaps the greatest marvel hitherto achieved by the electric telegraph, has been obtained by appliances of quite a homespun and rudimentary character. With somewhat more advanced plans, and more powerful apparatus, we may confidently expect that Mr. Bell will give us the means of making voice and spoken words audible through the electric wire to an ear hundreds of miles distant.

2957

COMPLAINANTS' EXHIBIT 12.

Reports on Awards, Centennial Exhibition, Group XXV., pages 131, 132.

4. ELISHA GRAY AND SAMUEL STOCKTON WHITE, CHICAGO, ILL., U. S.

GRAY'S ELECTRIC TELEPHONE AND MULTIPLE TELEGRAPH.

Report. — The idea of an electric telephone, or apparatus for transmitting sound to a distance by variations of electric current through a wire, has been for many years before the world, and has been realized in several ways, differing considerably in details as to the appliances at two points of the circuit, for producing the variations of electric current, and for deriving perceptible effects from them. An extension of this idea to some kind of electro-phonetic telegraphy was inevitable, even though no one had thought it might or could lead to practically useful results. But the idea of a multiple electro-phonetic telegraphy transmitting simultaneously several different musical notes, and using intermissions of these (like intermissions of currents in so many separate wires) for the simultaneous and independent transmission of different messages by one wire, is a very fine invention of high scientific character, promising important useful practical results. This invention is claimed by Mr. Gray, and he is entitled to full credit for it, even though, as I believe is the case, it has been also independently invented by others, both in England and America. A very well worked-out realization of it is given in Mr. Gray's apparatus now exhibited. A great practical advantage of the electro-phonetic multiple telegraph over other methods of multiple telegraphy through one wire, is that no adjustment is required for varying conditions of the line to render the non-interference among the different messages perfect. Another even more important practical advantage is that it is indifferent between what points of the line and in which directions the different messages are being sent. The different messages can, in fact, be transmitted from any different points of the line, and each may be read at all other stations (whether stations from which others of the messages are being sent or not) with practically perfect non-interference. Another important advantage is that earth currents and light-

ning discharges will never disturb the signaling. The exhibitors, in their "Information for the Judges," say, "We are now able to equip a line for actual business, with a capacity for carrying through each wire eight messages simultaneously, and we see no reason why the number may not be increased to sixteen without difficulty." I quite concur in the latter part of this statement, and believe that sixteen or more messages could be usefully transmitted at the same time through one land telegraph wire of many hundred miles' length, by the apparatus actually exhibited by Mr. Gray. Mr. Gray's apparatus includes an ingenious and effective instrument for automatically making and breaking an electric contact every time one of his telegraphic musical notes commences and ceases to sound. Thus his multiple telegraph may be made self-recording (after the Morse or Bain method), or may be worked forward by relay through greater lengths of line than imperfectness of the insulation allows to be worked in one circuit. Mr. Gray gave, in the Exhibition building, an exceedingly interesting and pleasing demonstration of his apparatus in action, transmitting musical performances through the wire, and letting the result be heard with marvellous brilliance at the remote end in three different ways, one of which, founded on the remarkable property of electric currents to increase or diminish friction between a moist solid and a metal in contact, discovered by Mr. Edison and used by him in his electro-motograph, is, I believe, altogether original and novel in this electro-phonetic receiving instrument of Mr. Gray's.

COMPLAINANTS' EXHIBIT 13.

The Chicago *Tribune*, Wednesday, February 28, 1877.

"THE TELEPHONE.

"LECTURE BY PROF. ELISHA GRAY AT McCORMICK HALL.

"*A large and delighted Audience — speaking by a Wire.*

"The 500 people who went to McCormick Hall last evening to "hear Elisha Gray lecture about the Telephone were not only amused "but instructed, since there was almost an entire absence of techni- "cal terms in the 'Professor's' language, and everybody in the audi-

2959

"ence could comprehend what he talked about. On the platform "was a miscellaneous assortment of telegraphic machinery, which "was used to illustrate his subject. Conspicuous in the center was "the Telephone — sixteen large and small boxes, connected together "by wires attached to a magnet. In the center of the auditorium, "kept in position by a wire running from one gallery to the other, "was a violin, with a magnet fastened to the sounding-board.

"The lecturer was introduced by Judge Caton, and after returning "thanks for his reception, which was very cordial, said his subject "was the force called, 'Electricity.' Fifty years ago it was looked "upon as something that could be used only to gratify an idle curi- "osity, such as producing convulsions in a frog's leg or twitching "the muscles of that more evolved animal, man. It was put to no "useful purpose, perhaps, except during thunder-storms, to intimi- "date bad boys. But since that time it had risen until to-day it was "the peer, if not the queen, of the forces of Nature. Then it was a "terror to the sick and afflicted; now it was considered a blessing "and an important aid in the art of healing. Then it was a beggar, "knocking at the door of Congress for $20,000 to demonstrate its "usefulness to mankind. Now, $100,000,000 could not purchase "the interests that it had directly or indirectly developed. Then "the merchant did not know the price of produce outside of his town "or county. Now he had the markets of the world at his door every "half hour. It would consume too much time and tire the patience "of all to trace the progress of electrical science. Its present state "of development was not due to any one man, but to a great many "investigators, all of whom had forged a link in the chain; some of "more and others of less value. Their headaches, and heartaches, "and midnight oil, and, he might say, the use of their pocket-books, "had culminated in the grand system of iron nerves that ran over "the face of the globe, and enabled us to hourly feel the pulsations "of the great heart of the world.

"Marvelous as the triumphs of electricity had been in the past, "especially in its development of electric telegraphy, it still from "time to time brought to the surface some new wonder, so that the "constant inquiry was, what next? Lately it had shown a musical "talent and powers of ventriloquism. Much time had been required

"to train it to sing, and a great deal of money had been paid the "teacher. Although it did not yet equal its sister, the piano, in "volume or quality of tone, it outrivaled it in the distance at which "it could be heard. The transmission of sound to a distance was "due to acoustics and electricity. It seemed to be a universal law "that everything was carried by motion. We saw motion in life, in "growth, and in death. There were various kinds of motion. One "form was sound. There was a motion we saw, but did not hear, "as the waving of a hand. If the hand could be made to vibrate "sixteen, twenty, or thirty times a second, we could hear a musical "tone. Sound was audible motion,—audible vibration. Sixteen "vibrations a second would produce a sound, and they could be in-"creased to 40,000 a second, when the sound faded out. Motion "still existed. Perhaps it became electricity. By and by it became "heat.

"He then alluded briefly to the propagation of sound waves, com-"paring them to the waves in the water when a pebble is thrown in. "They traveled ordinarily at the rate of 1,100 feet a second, some "tones went at a higher rate, and others at a lower rate. When we "came to electricity the rate could not be measured. As soon as "vibration commenced in Milwaukee or New York the sound was "heard in Chicago. The wave existed in the air or in any media as "a form — as a shape.

"There are two kinds of sound, noise and musical tone. The "former was caused by the waves striking the ear irregularly, with-"out periodicity, as that from the street. The latter was brought "about by regularity and periodicity of movement. Forty vibrations "a second was the lowest time of the piano, as commonly con-"structed. When the rate was increased the note rose in "pitch." "[This was illustrated by striking two tuning-forks, one representing "a high and the other a low note. One was tuned to 256 vibrations, "or 512 according to the French method, the other was its octave.]

"Passing on to electricity, he asked what it was. No one had "answered. It was a much-abused force, and had been used as a "sort of scapegoat for the explanation of everything that was mys-"terious. Everything in the heavens that could not be explained "was called electrical phenomena. He did not purpose at this late

2461

"day to dispel any of the prevailing ideas with reference to it by tell-
"ing what it was. Electricity was a certain condition that was called
"electrical [Smiles]. We would know quite enough when we dis-
"covered all the facts regarding its action and its uses. One of its
"most important uses was the phenomenon demonstrated 'Electro-
"Magnetism,' upon which most of the systems of telegraphing were
"based. It was produced by passing a current of electricity spirally
"around a soft, iron bar; and a singular fact was that the bar
"moved, the particles becoming polarized, and turning in their
"places, and elongating the bar itself. Professors Page and Henry
"discovered this in 1831, but stopped there. They heard a noise,
"and found out the reason for it; that the bar actually lengthened,
"and in lengthening made a noise, just as any other sudden quick
"motion would. The same principle was applied in the Telephone,
"the loudness of the tone depending upon the strength of the mag-
"netic influence passed through the boxes.

"The Professor then explained the construction of the instruments
"— both the receiver and the sender — which have heretofore been
"described at length in The Tribune. An operator on the platform
"'called up' Milwaukee, where the sender was located, and a num-
"ber of simple melodies were played on the Telephone and Violin,
"much to the delight of the audience, who applauded frequently.

"Some one suggested that the manipulator be requested to play
"'Hold The Fort.' Word was sent him, but he did not respond;
"and a voice cried out, 'Perhaps they don't know the tune in Mil-
"waukee.' [Laughter.] Continuing, the lecturer said that not
"only simple but composite tones could be transmitted simulta-
"neously over the same wire. This multiplied its capacity for tele-
"graphic purposes, and was the object of the invention. Eight
"tones had thus far been transmitted, the receivers and senders cor-
"responding in tone, each pair being attuned to the same vibrations,
"and the receiver, ignoring all other tones, would pick up only that
"which came from its own sender. Everything that was capable of
"being thrown into motion, and had a rate of its own — its funda-
"mental — would cause motion in a similar instrument. [This was
"illustrated by drawing a bass-viol bow across a tuning fork and
"placing another, which gave forth the same note, in a line with it,

"the second one vibrating without being touched, on account of the "action of the air waves upon it. The operators in Milwaukee sent "four tones over the same wire, and each could be heard clearly by "those near the platform, although all were sounded at the same "time. They were also run in together, but each little receiver or "box picked up its own note and did not interfere with its neigh- "bor.]

"Another development of the Telephone was interesting in a "scientific point of view. Prof. Bell, in his investigations, had gone "a step beyond composite tones, although they were embraced in it, "and developed the transmission of vocal sounds. A spoken word "was nothing but vibrations in some of its small and complex "forms; it was almost if not quite impossible to produce a pure "tone. There were overtones, vibrating at a higher rate, connected "with every fundamental. A piece of string vibrated; so did the "two halves, the four fourths, etc., of it, the latter being the over- "tones, and giving the element which was called quality. Thus an "E could be distinguished from a U.

"The instrument for transmitting vocal sound consisted of a hol- "low tube, on one end of which was stretched a metal membrane, "with a thin iron or steel armature glued to it, the membrane swing- "ing back and forth in the air, and copying the voice in all its forms, "assuming exactly the motion of the air when a word is uttered. "The word passed through a magnet, and at the receiving end was a "similar membrane, which was thrown into vibration in the same "manner, and there was consequently audible vibration in the form "of the word. The only trouble with the instrument was, that when "set in motion, it didn't stop as suddenly as a word was ended, and "a sort of echo accompanied it, as if the operator had his head in a "barrel, as if the words were blended together. So far the words "were very low, but the voice of a friend could be easily distin- "guished, with the ear close to the receiver. Whether it would ever "be brought to a state of perfection was a great question, because "there was not the power to do it. [Applause.]"

2963

DEPOSITION OF MILO G. KELLOGG.

Direct Examination by CAUSTEN BROWNE, Esq., *of Counsel for Defendant.*

Int. 1. What is your name, age, residence, and occupation?

Ans. Milo G. Kellogg; I am thirty years old; I reside at Chicago, Illinois, and am superintendent of the Western Electric Manufacturing Company.

Int. 2. Did you succeed Mr. Elisha Gray in that office?

Ans. I did.

Int. 3. Prior to that time, and while he was superintendent, what was your position?

Ans. I was employed by the Western Electric Manufacturing Company, and had charge of the shop when Mr. Gray was absent.

Int. 4. Will you look at the instrument which has been produced in evidence and is marked "Exhibit Concave Metallic Diaphragm Magnet Receiver," and state whether you remember the fact of such an instrument having been made and used at the shop of the Western Electric Manufacturing Company, by direction of Mr. Elisha Gray?

Ans. I remember that such an instrument was made and used in the shop of the company, under the direction of Mr. Gray.

Int. 5. Do you remember the same thing in regard to the instrument marked "Gray's Resonant Box Magnet Receiver"?

Ans. I do.

Int. 6. And also in regard to other receiving instruments, known in this case as animal tissue receivers?

Ans. I do.

Int. 7. Speaking now particularly of the resonant box receiver and the concave metallic diaphragm receiver, state in what year they were made and first used, so far as you know, and whether it was before or after Mr. Gray went to Europe with Mr. Goodridge.

Ans. They were made and used in the year 1874, and before Mr. Gray went to Europe with Mr. Goodridge.

Int. 8. If you saw them or heard them in use as receivers of musical tones at the time you speak of, state where it was.

Ans. I saw them used as receivers of musical tones in the shop

of the Western Electric Manufacturing Company, of Chicago, at that time.

Int. 9. With what transmitting instruments?

Ans. I saw the resonant box magnet receiver used in connection with a single tone transmitter. I saw the concave diaphragm magnet receiver used in connection with a two-octave musical transmitter. The instrument here present, marked "Exhibit Gray's Two-octave Musical Transmitter," I believe to be the one.

Int. 10. In what room was the transmitter, and in what room the receiver; and how were these rooms respectively situated, — how far distant?

Ans. The two-octave transmitter was placed in a small experimental room in the shop, and the concave diaphragm magnet receiver was in the office of the shop. These rooms were on the same floor and about fifty or seventy-five feet apart. When the single tone transmitter was used with the resonant box magnet receiver, the instruments were respectively in these rooms.

Int. 11. I understand that in each case the transmitter and the receiver were connected in electrical circuit. Is that so?

Ans. That is so.

Int. 12. If it was not possible that the sounds made by the transmitting instrument in the room where it was could be heard in the room where the receiving instruments were, state what prevented it.

Ans. The distance was such that the sound of the transmitting instrument would not be audible at the place of the receiving instrument. The noise of the shop would have hindered the hearing of any such transmission through the air.

Int. 13. What was the result of this demonstration as to distinctness of hearing of the transmitted musical tone in the room where the receiving instruments were placed?

Ans. The transmitted tone came distinctly from the receiver in either case, so as to be heard throughout the room.

Int. 14. Who, if any one, was with you in the receiving room, during these demonstrations?

Ans. Mr. Gray, Mr. Goodridge, and Mr. E. M. Barton were present at different times.

2965

Int. 15. In his answer to the ninety-ninth direct interrogatory, which has been read to you, Mr. Goodridge describes the experimental use of certain instruments for the purpose of transmitting and receiving articulate speech last autumn, at Chicago, at the works of the Western Electric Manufacturing Company, such instruments being the resonant box magnet receiver, the concave metallic diaphragm magnet receiver and the diaphragm box magnet receiver, also an Edison transmitter; the operation of talking with these instruments being performed between two rooms, from fifty to one hundred feet apart, and on different floors. Do you remember the experiments to which he refers?

Ans. I remember such experiments.

Int. 16. Will you please state what you yourself observed or heard in the course of these experiments?

Ans. The concave diaphragm magnet receiver was connected up in circuit with an Edison carbon transmitter, there also being a bipolar telephone receiver at the end of the circuit where the transmitter was. I heard conversation on the concave diaphragm magnet receiver coming from the carbon transmitter. I talked on the concave diaphragm receiver, and was heard on the bipolar telephone. The diaphragm box magnet receiver was also placed in the circuit with the transmitter, and I heard conversation on that coming from the transmitter. The diaphragm box magnet receiver was placed in the circuit instead of the Edison carbon transmitter at the transmitting end, and I received conversation on the concave diaphragm receiver coming from the box diaphragm receiver. In these experiments there were a few calls of battery placed in the circuit. I remember Mr. Goodridge having at the time the resonant box magnet receiver, but I did not myself use it.

Cross Examination by J. J. STORROW, Esq., *of Counsel for Complainants.*

Cross-Int. 17. In 1874, when the instrument now called the concave metallic diaphragm receiver was first made and tried as you have stated, by what name was it known?

Ans. At that time it was called a magnet receiver, I think.

Cross-Int. 18. By what name was the resonant box magnet receiver then known?

Ans. That was also known as a magnet receiver.

Cross-Int. 19. Was any name or phrase used then or in 1875 to distinguish those two receivers from each other?

Ans. I do not remember when they were first distinguished by any particular name given to them, excepting as magnet receivers.

Cross-Int. 20. By what name was the diaphragm box magnet receiver, which you have spoken of, known in 1874?

Ans. I don't recollect seeing the diaphragm box magnet receiver in 1874.

Cross-Int. 21. By what name was it known in 1875?

Ans. I remember seeing it in 1875, about the shop, but do not remember any conversation with reference to it.

MILO G. KELLOGG.

Attest: W. C. WITTER, *Examiner.*

DEPOSITION OF ENOS M. BARTON.

Direct Examination by CAUSTEN BROWNE, Esq., *of Counsel for Defendant.*

Int. 1. What is your name, age, residence, and occupation?

Ans. Enos M. Barton; I am thirty-six years old; I reside at Chicago, Illinois, and am secretary of the Western Electric Manufacturing Company.

Int. 2. Were you in the employment of that company in 1874, and if so, in what capacity?

Ans. I was in the same capacity as at present.

Int. 3. Will you look at the two instruments which have been produced in evidence, marked respectively "Exhibit Concave Metallic Diaphragm Magnet Receiver" and "Exhibit Resonant Box Magnet Receiver," and state whether you remember the fact of such instruments having been made and used by the direction of Mr. Elisha Gray at the shop of the Western Electric Manufacturing Company, and if so, whether it was before Mr. Gray went abroad in August, 1874?

Ans. I recollect the fact of those instruments being used by Mr. Gray. I don't think I saw either of them until they were completed and ready for use. The concave metallic diaphragm receiver

2967

I saw in Chicago at the shop, in use as receiver for Mr. Gray's musical telephone, before he went abroad. The resonant box magnet receiver I don't recollect having seen in Chicago before Mr. Gray went abroad. It was in use here in New York where I saw it, in May or June of 1874.

Int. 4. Did you see the concave diaphragm receiver, at the time you speak of, connected in an electrical circuit with a transmitter, for the purpose of transmitting and receiving musical tones electrically?

Ans. I did.

Int. 5. With what transmitter was it connected?

Ans. It was connected with a key-board transmitter capable of rendering tunes.

Int. 6. Look at the instrument here present, marked "Gray's Two-octave Transmitter," and say if that is the instrument you refer to.

Ans. It was like that.

Int. 7. In what rooms were the transmitter and receiver, respectively, and how were these rooms situated as to distance apart, etc.?

Ans. They were two small rooms on the same floor, distant apart, at the nearest points, about seventy-five feet, separated, so that to go from one to the other you would pass through another room.

Int. 8. Was it possible for the sound of the transmitting instrument to be heard through the air by a person in the room with the receiving instrument?

Ans. No, sir; it was not.

Int. 9. What was the result of the use on this occasion of the transmitter and receiver electrically connected, as you have described, as to distinctness of hearing of the transmitted musical tone in the room where the receiving instrument was placed?

Ans. When a key was closed at the transmitting end we could hear its note on the receiver with perfect distinctness. When two keys were closed at once we could tell that also.

Int. 10. Who, if any one, was with you in the receiving room during these demonstrations?

2968

Ans. I have no positive recollection in regard to any particular person.

Int. 11. I will refer you to the answer of Mr. Goodridge to the ninety-ninth interrogatory, in which he describes the experimental use of certain receiving instruments for the purpose of transmitting or receiving, or both transmitting and receiving articulate speech, and ask you if you remember the experiments to which he there refers.

Ans. I remember the experiments which he describes.

Int. 12. If you took any part in them, please tell us what you did: that is to say, from what receiver you have heard speech, and from what transmitter it was sent, and through what transmitter you spoke, and upon what receiver you received.

Ans. I heard words, using at my ear the diaphragm box magnet receiver and the concave metallic diaphragm magnet receiver. These words were spoken at the other end of the line into an Edison transmitter. I spoke against the diaphragm box magnet receiver and received answers to my questions, showing that my words were heard. These words I understood to be heard by Mr. Goodridge when he used as a receiver what we called a bipolar telephone. I asked Mr. Goodridge to use these instruments, the diaphragm box magnet receiver and the concave metallic diaphragm magnet receiver, — one for transmitting and the other for receiving, — and he told me a few minutes later that he had succeeded in transmitting and receiving with those instruments only. I had no knowledge of it myself, being called away at the time.

ENOS M. BARTON.

Attest: W. C. WITTER, *Examiner*.

[*Counsel for the defendant puts in evidence an official copy of the specification and drawing of the patent granted to Elisha Gray, July* 20, 1875, *No.* 165,728, *for Improved Transmitter for Electro-Harmonic Telegraph, marked "Defendant's Exhibit Gray's Reed Transmitter, W. C. W., Ex'r."*

Also, extract from paper read by Professor Alexander Graham Bell, October 31, 1877, *before the Society of Telegraph Engineers, entitled "Researches in Electric Telephony," and the same is marked "Defendant's Exhibit, Extract from Bell's London Lecture, W. C. W.,*

2469

Ex'r." The paper in question is printed in the Journal of the Society of Telegraph Engineers, No., XX, Vol. VI, and the extract put in evidence is on pages 406 and 407 of the book.]

[*Adjourned to April 9, 1879, at 10.30 A. M.*]

DEPOSITION OF ANSON STAGER.

Direct Examination by CAUSTEN BROWNE, Esq., *of Counsel for Defendant.*

NEW YORK, April 9, 1879, 10.30 A. M.

Int. 1. What is your name, age, residence, and occupation?

Ans. Anson Stager; I am fifty-three years old; I reside at Chicago, Illinois, and am vice-president and general superintendent of the Western Union Telegraph Company there.

Int. 2. Were you living in Chicago in 1874; and if so, in what official position?

Ans. I was living in Chicago in 1874, and was general superintendent of the central division of the Western Union Telegraph Company. I was at the same time president of the Western Electric Manufacturing Company.

Int. 3. Do you remember the fact of an apparatus for the electrical transmission of musical tones being connected up and used with a receiving station in your office, and the transmitting station in the Western Electric Manufacturing Company's shop, in 1874, before Mr. Elisha Gray went to Europe?

Ans. I do.

Int. 4. Will you state what instruments were at the receiving station in your office for the purpose of receiving the tones which were transmitted from the other station; and if there are here present any one or more of such receiving instruments, or correct representations of them, will you point them out?

Ans. I recognize two of the instruments here that were experimented on.

[*The witness refers to the concave metallic diaphragm receiver and the resonant box magnet receiver.*]

WITNESS (*resumes*). — This piece [*pointing to the metallic brace extending from the magnet cores upwards to the rim of the concave*

2970

diaphragm] was not on it, as I remember, when I witnessed the operation.

Int. 5. Referring now specially to the resonant box magnet receiver, how was the box placed with reference to the magnet when the receiver, as a whole, was in operation?

Ans. I remember distinctly that the box was placed immediately upon the core of the magnet.

Int. 6. With the box thus resting on the magnet, what was the effect to the ear in the room where you were with the receiving instrument, when tunes were played at the other end of the line on the transmitting instrument?

Ans. My office room was probably about the size of this [*fourteen feet square*], and the music could be heard distinctly about the room when the room was quiet. My room was near the street, and when there were wagons going by it would be hard to hear; but I could always distinguish the tune.

Int. 7. Was the playing which you thus heard in your room in melody, — that is, one note sounding at the time, — or in harmony, — that is, several notes sounding, — or sometimes one way and sometimes the other?

Ans. I heard single notes and notes struck in harmony, — both ways.

Int. 8. You have described what you heard with the resonant box magnet receiver. Did you hear similar play with the concave metallic diaphragm magnet receiver?

Ans. I did.

Int. 9. Did you go to the other end of the line to see the transmitting instrument?

Ans. I did.

Int. 10. Who was playing upon it, and what sort of an instrument was it?

Ans. Mr. Goodridge was the principal performer, and the instrument was the same or similar to the one before me [*pointing to the instrument marked "Gray's Two-octave Transmitter"*].

Int. 11. Can you name any persons who heard the operation of these instruments at the receiving station, in your office?

Ans. I can give the names of Lieut.-General P. H. Sheridan;

2971

Charles H. Haskins, then, I think, in the employ of the Northwestern Telegraph Co., and now agent for the Bell Telephone Company, at Milwaukee; C. H. Summers, Assistant Electrician of the Western Union Telegraph Company, residing in Chicago. There were quite a number. I was exhibiting this thing in my office for a number of months. Mr. William Edwards, of Cleveland, Ohio, was there.

Int. 12. When you speak of the things which you had in your office for a number of months, do you refer to the concave diaphragm, and the resonant box diaphragm, or to other receiving instruments; if so, what?

Ans. The two instruments here were exhibited in my office but on one or two occasions. The instrument that seemed to interest my visitors the most was the violin, and a box similar to this, — about half the size of this [*pointing to a letter box on the Commissioner's table*].

Int. 13. Describe how you used the violin. I hand you now the Exhibit Animal Tissue Violin Receiver.

Ans. The line wire from the Western Electric shop was connected with the metal strip which extends along the sounding board of the violin at my office. By grasping a ground wire in my left hand and rubbing the forefinger of the right hand upon the metallic strip heretofore described, every note struck by Mr. Goodridge, on the transmitting instrument at the Western Electric shop, was distinctly produced upon the violin, and distinctly heard in every part of the room.

Cross Examination by CHAUNCEY SMITH, Esq., *of Counsel for Complainants.*

Cross-Int. 14. When did you first see the brace on the metallic diaphragm receiver referred to in your answer to the fourth interrogatory?

Ans. I don't know that I ever saw it before today.

Cross-Int. 15. When did you first see this instrument after Mr. Gray's return from Europe?

Ans. I can't remember any particular time. I remember to have seen it in the Western Electric shop on several occasions.

Cross-Int. 16. Was this and the resonant box magnet receiver kept in your office before Mr. Gray went to Europe?

Ans. I can't say that they were kept in my office. They were exhibited in my office for one or two days, — possibly longer.

Cross-Int. 17. You have spoken of your connection with the Western Electric Manufacturing Company and the Western Union Telegraph Company in 1874, and at the present time. Did you hold the same relation to those companies during the intermediate period?

Ans. Precisely the same relations, with the exception of being elected a director and vice-president of the Western Union. It has not, however, changed my official duties.

Cross-Int. 18. When were you elected director and vice-president of the Western Union?

Ans. I don't remember the particular month or year, but about two years since — not quite two years since.

Cross-Int. 19. When did Mr. Gray cease to be superintendent of the Western Electric Manufacturing Company?

Ans. I cannot say positively; but my recollection is that it was prior to his sailing for Europe in 1874.

Cross-Int. 20. Has he, since his return from Europe, held the position of electrician to the company, and had a room or occupied an office on the premises of the company?

Ans. I cannot state positively. My recollection is that he has not received salary or had an office in the building since his return from Europe, but that we have continued to use his name as electrician of the company, without any official connection whatever.

Cross-Int. 21. Has he spent any considerable portion of his time on the premises of the company, or had apparatus built there, or made experiments relating to multiple telegraphy?

Ans. I cannot state anything positive about his spending any time on the premises of the Western Electric Company, though I believe a larger part of his experimental machinery has been manufactured at the Western Electric shops, and the same facilities extended to Mr. Gray or his assistants as are usually extended to other parties having similar work. I would state that my position as president of the Western Electric Manufacturing Company does not require my personal attention to the detail of management, and

2973

I cannot, therefore, state positively what has or has not been done in the shop.

Cross-Int. 22. Has he been accustomed during this period, or any part of it, to come to your office on the premises of the Western Union Telegraph Company, or spend any considerable portion of his time there?

Ans. I can say that he has spent some time on the premises of the Western Union Telegraph Company when it was necessary to use its wires for testing his multiple or way duplex. Those experiments, though, were limited, I think, to two or three occasions.

Cross-Int. 23. Have you been accustomed to afford him every facility he desired for testing his inventions?

Ans. I have afforded him some facilities for testing his invention, but have not afforded him all that he desired.

Cross-Int. 24. You speak of Mr. Charles H. Haskins as one who witnessed certain experiments when you were present in 1874, and who was then in the employ of the Northwestern Telegraph Company, but who is now agent for the Bell Telephone Company at Milwaukee. Can you tell me how long his employment by the Northwestern Telegraph Company continued, and when his agency for the Bell Telephone Company commenced?

Ans. Mr. Haskins was then the general superintendent of the Northwestern Telegraph Company, and still occupies the position. I cannot name the time when he took the agency for the Bell Telephone Company, but I believe it is over a year ago.

Cross-Int. 25. Did you or the Western Electric Manufacturing Company at any time enter into any arrangements with the parties interested in the Bell telephone, to act as their agents in any way, or to aid in its introduction to public use?

Ans. The Western Electric Company, to the best of my recollection, entered into an arrangement with some parties or the Bell Telephone Company, for the agency of the Bell telephones in the city of Chicago. I don't know of any aid offered in that direction further than to offer the telephones for lease on the terms prescribed by the Bell Telephone Company. The details of the arrangement I do not now remember.

Cross-Int. 26. Can you state the time when this arrangement was made?

Ans. I cannot, without referring to the papers in connection therewith.

Cross-Int. 27. If you have the papers here will you refer to them and give the date? If you cannot do so, state as near as you can, from recollection, the time.

Ans. The papers are in the Western Electric Company's office, at Chicago. The business being conducted by the secretary of the company, I rarely have occasion to look at such papers, and do not charge my mind with dates or details. To the best of my recollection, this arrangement was made about the time the Bell Telephone Company were establishing agencies in Western cities, — I should say a year and a half or two years ago, somewhere thereabouts.

Cross-Int. 28. You personally took some part in the negotiations which led to this arrangement, did you not?

Ans. I presume that I had, to the extent of conversing with the parties who represented the Bell Telephone Company, and in bringing about a conference with the secretary of our company, between whom all details of the arrangement were negotiated. I presume I signed the contract, if there was a written contract.

Cross-Int. 29. Do you recollect upon what terms the Western Electric Company undertook this agency?

[*Objected to.*]

Ans. I do not now recollect.

Cross-Int. 30. Do you remember who was to manufacture the Bell telephone instruments which the company were to lease?

[*Objected to.*]

Ans. I don't know that I ever heard who was to manufacture them. I think there was no part of the arrangement for the Western Electric to manufacture them.

Cross-Int. 31. Did the Western Electric Company go on and lease telephones under the arrangement?

Ans. I believe they did, but to what extent I am not aware.

ANSON STAGER.

Attest: W. C. WITLER, *Examiner.*

2935

DEPOSITION OF EDWARD S. RENWICK.

NEW YORK, April 24, 1879.

Direct Examination by CAUSTEN BROWNE, Esq., *of Counsel for Defendant.*

Int. 1. What is your name, age, residence, and occupation?

Ans. My name is Edward S. Renwick; I am fifty-six years of age; I reside at Millburn, New Jersey, my place of business being in the city of New York; I am by profession a civil and mechanical engineer, but am engaged almost exclusively as expert in patent causes and as solicitor of patents.

Int. 2. State to what extent your professional duties have involved the study of subjects connected with electro-magnetism, and for how long a time past.

Ans. I have a general knowledge of the subject of electro-magnetism, but I do not profess to be a skilful electrician nor a skilful telegraphic operator. I have taken a good deal of interest in the subject, have read a number of works relating to it, and have examined a number of telegraphic instruments, and many descriptions referring to such instruments. A number of years ago I was employed in one contested case relating to telegraphic instruments, and have been called upon to prepare one application for a patent for such instruments. My first knowledge on the subject goes back to the date of the exhibition made at the New York University, in this city, by Professor Morse, of the capacities of his electric telegraph.

Int. 3. Have you examined, so as to be familiar with them, the two patents of Professor Bell which are in suit in this case, namely, his patent of March 7, 1876, No. 174,465, and his patent of January 30, 1877, No. 186,787?

Ans. I have examined Patent Office copies of the two Bell patents referred to in the question. I believe that I understand their contents, and the construction and operation of the mechanism represented and described in each of them.

Int. 4. I will call your attention to the fifth claim of the Bell patent of 1876, and ask you to explain, by reference to the specifica-

tion and drawing, what you understand to be the apparatus referred to in that claim, and its described operation and its described object.

Ans. I understand that the object of the apparatus recited in claim 5 is to transmit telegraphically a note of a certain definite pitch, and to receive the same when the apparatus by which the note is produced is put in motion by the human voice or by means of a musical instrument. My understanding is obtained from the description of the patent, which describes first, a method and means of producing undulatory currents of electricity; and subsequently describes apparatus of various kinds in which such undulatory currents or electrical undulations are employed practically for the transmission telegraphically of one or more musical notes of definite pitches. In the first apparatus described for this purpose, which is that represented at Fig. 5 of the patent, a steel spring, capable of vibrating, and of producing a musical note of a certain definite pitch, is employed. In order that the note so produced may be transmitted telegraphically, the steel spring is firmly clamped by one extremity to the uncovered leg of an electro-magnet, and the coil of wire surrounding the magnet is connected with an electric battery, and a line wire leading to a distant station. The steel spring thus becomes the armature of the electro-magnet, and when it is set in vibration for the purpose of producing its musical note, corresponding electrical undulations pass through the line wire to its further or receiving end. In order that the notes so transmitted (or, more properly, so transformed into electrical undulations which are transmitted) may be received and made audible at the receiving end of the line, a corresponding electro-magnet is there connected with the line wire and is provided with a steel spring as an armature, capable of vibrating at the same rate, and of producing a musical note corresponding in pitch with the vibrating armature at the transmitting end. Consequently, when the armature at the transmitting end is vibrated by any means, so as to produce its musical note, a corresponding musical note of the same pitch is reproduced by the steel spring armature at the receiving end by the action of the electrical undulations which are transmitted through the line wire connecting the two electro-magnets. The patent further describes that one pair or several pairs of instruments may be used in connection with the same line

2977

wire, the instrument of each pair at the receiving end in every case corresponding, in the pitch which its armature or vibrating steel spring is capable of producing, with its mate at the transmitting end, so that the former will vibrate and produce its tone whenever the latter is vibrated, but will not vibrate or produce any tone when the transmitting instrument of another pair is vibrated. The patent describes that the steel spring, or vibrating armature, at the transmitting end, may be set in vibration in a variety of ways, one of which is by wind. And the patent describes, lastly, a means whereby motion can be imparted to the armature or vibrating steel spring by the human voice or by means of a musical instrument, and it is this last mode which, as I understand it, constitutes one of the parts of the object of the apparatus recited in the fifth claim of the said patent. The apparatus thus recited, as I understand it, comprises essentially the following devices, namely, an electro-magnet at the transmitting end; a corresponding electro-magnet at the receiving end; a steel spring armature fastened loosely by one extremity to the electro-magnet at the transmitting end; a corresponding steel spring armature fastened loosely by one extremity to the electro-magnet at the receiving end; a stretched membrane attached to the armature at the transmitting end, so that when a sound is there uttered the undulations operating upon the said membrane may vibrate the armature; a similar stretched membrane attached to the armature at the receiving end, so that when the armature at that end is caused to vibrate by the electrical undulations transmitted to the wire by the vibration of the armature at the transmitting end, and by such wire transmitted to the receiving end, a corresponding sound is made audible by the vibration of the stretched membrane at the receiving end. The apparatus includes the line wire by which the two instruments are connected and the battery by means of which the current of electricity is generated.

As I understand the operation of this apparatus, when a sound is uttered at the transmitting end, either by the human voice or by means of a musical instrument, the movement of the stretched membrane imparts motion to the armature, and causes it to vibrate so as to produce a tone of a pitch peculiar to such armature when vibrated. The vibration of this armature, so set in motion in front of the mag-

net, produces electrical undulations, which are transmitted by the line wire to the receiving instrument, where the electrical undulations occasion a vibration of the armature of the receiving instrument, corresponding with those of the armature of the transmitting instrument, and these reproduced vibrations operate upon the stretched membrane at the receiving instrument, so that when the ear is applied thereto, the sound is made audible.

The apparatus represented at Fig. 7 and referred to in the fifth claim contains, in addition to the devices above-mentioned by me, a conical mouth piece at the transmitting instrument for the purpose of confining the waves produced by the human voice, or by the musical instrument, so that they may act with greater force upon the stretched membrane at that end of the line. The said apparatus also contains a similar cone at the receiving end, forming a species of ear trumpet, so that the vibrations of the membrane, or the waves produced thereby, may be conducted more certainly to the ear of the hearer or with greater resonance. These two conical pieces form the frames upon which the membranes are stretched; and so much of them as is necessary to hold the membranes under tension, or some substitutes for so much of them as is required for this purpose, are essential to the apparatus recited in the said fifth claim; but the residues of the cones are not, as I understand the matter, essential.

Int. 5. Will you now refer to the specification of the Bell patent of 1877, No. 186,787, and state what, if anything, you find therein describing the operation of the apparatus shown and described in the patent of 1876, No. 174,465, and referred to in its fifth claim?

Ans. In order that my reference may be understood, I may state that the specification of the said patent, No. 186,787, opens by referring to various applications and patents of the same inventor, among which is specifically mentioned the Letters Patent granted to the said Bell, March 7, 1876, No. 174,465. In reference to the said applications and patents, the specification of patent No. 186,787 contains the following statement, describing the operation of the apparatus shown and described in them, namely: —

"In the applications and patents above referred to, signals are transmitted simultaneously along a single wire by the employment of transmitting instruments, each of which occasions a succession of

2979

electrical impulses, differing in rate from the others, and are received without confusion, by means of receiving instruments, each tuned to a pitch at which it will be put in vibration to produce its fundamental note by one only of the transmitting instruments. A separate instrument is therefore employed for every pitch, each instrument being capable of transmitting or receiving but a single note, and thus as many separate instruments are required as there are messages or musical notes to be transmitted."

Int. 6. Do you find described in the specification of Bell's patent 174,465 any useful purpose for which the apparatus described therein may be used? If yea, what is it?

Ans. I do; namely, for the purpose of sending telegraphic despatches, in which case, as stated in the patent, "The duration of the sound may be used to indicate the dot or dash of the Morse alphabet, and thus a telegraphic despatch may be indicated by alternately interrupting and renewing the sound."

The specification also describes that by means of two or more instruments at each end of the line, "two or more telegraphic signals or messages may be sent simultaneously over the same circuit without interfering with one another." Inasmuch as the patent describes apparatus by means of which two or more musical notes may be transmitted simultaneously or separately, it is obvious that tunes may be transmitted telegraphically by the apparatus although there is no statement to that effect in the patent.

Int. 7. Do you find in that patent any description or statement to the effect that articulate speech may be transmitted telegraphically and reproduced at the receiving end of the line?

Ans. I do not. And when considering this matter I took into consideration the fact that the fifth claim contains the words, "transmitting vocal or other sounds telegraphically," and also the words, "vocal or other sounds." I understand, however, that the telegraphing of sounds thus referred to by this language is to be substantially as set forth in the preceding description, and that the language does not apply to such vocal sounds as articulate speech, but to sounds which are produced when the human voice is employed, as described in the specification, to impart motion to the vibrating armature of the receiving instrument described in the specification, the armature

to which the motion is to be imparted being "the armature *c*, Fig. 7, fastened loosely by one extremity to the uncovered leg *d* of the electro-magnet *b*"; and the means by which the human voice is employed to give motion to the said armature, being the stretched membrane attached to the swinging end of the said armature. Hence, as I understand the matter, the vocal sound referred to is the sound produced by the action of the human voice operating upon the mechanism described, and is not the identical sound of the voice itself, as would be the case if articulate speech was transmitted.

Int. 8. Have you tried or conducted any practical operations with an apparatus constructed in exact conformity with the specification and drawings of the Bell patent of 1876, as respects the matters referred to in the fifth claim? If so, will you explain in detail what such experimental operations were, and point out how far the results of them are in accordance with the explanation you have given of the true character and intended operation of the apparatus mentioned in the fifth claim?

Ans. In connection with others, I conducted a set of experiments with an apparatus constructed in exact conformity with the specification and drawings of the Bell patent of 1876, as respects the matters referred to in the fifth claim thereof, but with such additions to the apparatus as appeared to be necessary to enable it to be used practically, such additions consisting in the addition to each instrument of a bed or frame for holding the members of the instrument in their proper positions, and subsequently of the further addition of means of adjusting with nicety the relative positions of the electro-magnets and the armatures thereof, so as to adapt them to the employment of galvanic batteries of greater or less strength. These experiments were made by me in connection with Mr. William M. Goodridge. Mr. Elisha Gray was also present at some of the experiments and participated in them, and Mr. Glass (the foreman of the shops at the Western Union Telegraph Company) was present during some of the experiments and participated in them. The earlier experiments were made at the shop of the Western Union Telegraph Company, in New Church Street, in New York. As this locality is a very noisy one, from its proximity to the lowest station of the Metropolitan Elevated Railroad Company, and as the results

2981

attained were very unsuccessful, the latter experiments were made in the interior of a building in a more quiet locality, namely, at No. 19 Park Place, in this city, in which building the central rooms are separated by outer rooms, and wide, light-wells from the rooms on the streets at the opposite ends of the building. The battery used was a gravity battery, and from two to thirty cells were employed in different experiments. In every case the armature of each instrument was adjusted so as to be as close as possible to the core of the electro-magnet without risk of being attracted permanently thereto, and being thereby prevented from vibrating. A number of experiments were made with the instruments in each of the different conditions in which they were used. In the experiment at the Western Union shop the transmitting instrument was placed in one room and was connected by two wires with the receiving instrument in a room three stories above the first room. The conditions of the experiments and the results were as follows: —

1. With a battery of two cells, the armature being set close to the pole of each magnet, no sound whatever was heard at the receiving instrument when Mr. Goodridge informed me that he spoke at the transmitting end.

2. With a battery of twenty cells, the armatures of the two instruments being reset to adjust them to the increased magnetic force of the electro-magnet incident to the use of this stronger battery, Mr. Goodridge was directed by me to first speak and then to yell loudly. No articulation or anything analogous to speech could be heard by me at the receiving instrument; and in but one of a number of experiments did I hear even a faint sound when Mr. Goodridge said he yelled at the transmitter.

After these experiments both instruments were carefully examined by me, and I noticed that the vibrating armatures were fitted with tolerable tightness at their hinge connections with the magnet. Hence I directed that the jaws between which the upper ends of the armatures were fitted should be eased; that is, filed out so as to permit greater freedom of motion, and also that the pivots of the hinges should be reduced so as to permit the armatures to swing freely. The instruments were then tried again, as follows: —

3. With a battery of six cells, repeated trials were made, and

once a faint sound was heard. The armature of the receiving instrument vibrated at times and produced thumping like the taps of a drum. Mr. Glass (who apparently had a stronger voice than Mr. Goodridge) was requested to yell loudly at the transmitting instrument, and to count as loudly as he could. Then a faint sound was heard at the receiving instrument, analogous to that represented by the words "pum, pum, pum," each sound apparently corresponding with the syllable uttered by Mr. Glass when counting. Thus, when he counted numbers of a single syllable, as one, two, three, a single sound like "pum," was heard for each number counted; and when he got to the higher numbers, which required two or more syllables, as many tones were heard in quick succession as there were syllables in the number counted. As, for example, "pum-pum," for the number nineteen. No articulation and nothing analogous to speech was distinguishable.

4. With a battery of thirty cells, the instrument being readjusted, a number of experiments were tried, but with results worse than those when the battery of six cells was used.

When the above experiments were made the instruments were so constructed that the adjustment had to be made directly by hand, screws being employed to hold the parts in their relative positions, and such screws being slacked when the adjustments were made. As this means of making the adjustment rendered it difficult to adjust the instruments with nicety, I requested that the instruments might be modified by the addition of slides and screws, so that the armatures could be adjusted with nicety as closely to the cores of their respective electro-magnets as was possible without having the armatures strike the magnets and adhere to them. This modification was made and the following experiment was tried: —

5. With a battery of six cells, and with Mr. Glass at the transmitting end, with the receiver placed on a long work bench, which probably acted as a sounding board, slight sounds were heard when Mr. Glass counted, but no articulation, the tone of the sound being always about the same. When the receiving instrument was placed on a shelf at the side of the room, no sound whatever could be heard. When the receiver was held in the hand, separated from

AMERICAN BELL TELEPHONE COMPANY, ET

2983

any other support, a slight sound was heard as before, corresponding apparently with every syllable counted.

6. An Edison carbon transmitter was connected with the transmitting end of the line, and the Bell receiving instrument with the receiving end of the line. With this arrangement the sounds differed from those previously heard, being louder, but nothing approaching articulation could be distinguished.

7. The Bell transmitter and receiver were used in connection with a battery of thirty cells, and Mr. Glass yelling and counting at the transmitter. Sounds were heard as before at the receiving instrument, when the Bell transmitter and receiver were used, but no articulation or sound like speech or syllables was distinguishable.

8. The armatures of both instruments were changed, very light steel vibrating tongues being substituted for those first used. With a battery of six cells, no sound was distinguishable.

9. With a battery of thirty cells, and the same light steel armatures, slight sounds could be heard at the receiving end, but no articulation.

10. The light steel armatures were removed and extra heavy ones were substituted in their places; that is to say, armatures considerably heavier than those first experimented with. With a battery of six cells, and with the receiving instrument placed on the work bench, sounds could be heard as before, but no articulation. When the receiver was held in the hand, no sound whatever could be heard.

11. With the same heavy armatures, and with a battery of thirty cells, sounds could be heard, but no articulation. The general results of the experiments with the heavy armatures and with the light armatures were not as good as those with the medium armatures first tried.

12. The medium armatures, namely, those first tried, were detached from the legs of the electro-magnets and were hung in brass straps attached to the cones of the instruments, so that there was no continuity of magnetic connection between the armatures and the electro-magnets. A number of experiments were made with a battery of six cells, without any sound whatever being heard at the receiving instrument.

When the above experiments were made I frequently changed places with Mr. Glass, Mr. Goodridge and Mr. Gray, going myself

to the transmitting instrument and getting those gentlemen to report to me the results attained at the receiving instrument. In every case also the small end of the trumpet of the receiving instrument was inserted in the ear as an ear trumpet would be.

The day following the above experiments the instruments were taken to No. 19 Park Place, where a battery of six cells was set up, and conducting wires. The transmitting instrument was placed in room No. 4, in the second story. The receiving instrument was placed in room No. 23, two stories above and on a different light well. The following experiments were made: —

1'. Mr. Goodridge yelled and counted at the transmitter. I listened at the receiver. I could hear no sound by the receiver, although I heard Mr. Goodridge yell and count through the building.

14. I went to the transmitting instrument, after carefully adjusting the receiving instrument; I readjusted the transmitting instrument, and yelled and counted at it. Mr. Goodridge reported that he heard sounds at the receiver corresponding with my yells and counting, and that these sounds were succeeded by the sound of my voice conveyed through the building.

15. Mr. Goodridge and I changed places, he being at the transmitter and I at the receiving instrument. I heard sounds, or more properly, tones, corresponding with his yells and syllables; each tone received into the ear from the receiving instrument being succeeded by the sound of Mr. Goodridge's voice transmitted through the building. The same experiment was repeated a number of times and with the same results, the tones received at the receiving instrument being the same — one for each syllable, and apparently all of the same pitch, however much the words spoken at the transmitting instrument might be varied.

Thus, all words of one syllable gave one uniform tone, whatever the word might be; words of two syllables gave two tones in quick succession; the tones, so far as my ears could distinguish, being exactly the same, no matter what word of two syllables might be spoken. In the course of these repeated experiments it was found that the animal membrane at the transmitting instrument became softened by the action of the breath, so that the magnetic force drew the armature into contact with the electro-magnet; consequently, as the experiments proceeded, the transmitting instrument had to be read-

2985

justed by moving the cone on which the membrane was stretched progressively further from the magnet.

16. Three cells of the battery were disconnected for the purpose of ascertaining whether or not a smaller electric force would produce better results. The results, however, were practically the same as before, no articulation being distinguishable.

17. The armatures were disconnected from the poles of the electro-magnets, and were hung from brass straps connected with the cones, so that there was no continuous magnetic connection between the armatures and the magnets. When I was at the receiver, and Mr. Goodridge at the transmitter, the same results in kind were obtained as before, but the sounds heard were fainter than those heard with the armatures hanging directly from the magnet. Upon changing places with Mr. Goodridge, he reported the same results as above stated by me; namely, that the sounds were fainter than when the armatures were hung from the magnets, but were the same in kind.

[*Adjourned to April* 25, *at* 10 *A. M.*]

NEW YORK, April 25, 1879.

Int. 9. I understand from the account you have given of the operation of an apparatus like that referred to in the claim of the Bell patent of 1876, that the sounds given out by the apparatus at the receiving end were invariably tones of one constant pitch, whatever might have been the variation in the pitch of the sound uttered against the diapraghm at the transmitting end. What does this show upon the question what it is whose vibrations are transmitted along the line, and delivered at the receiving end, in the apparatus referred to in the fifth claim of the patent of 1876?

Ans. It shows that the peculiar vibrations of the armature at the transmitting end are those which are transmitted along the line and delivered at the receiving end.

Int. 10. By the vibrations of this armature, do you mean its movement to and fro around its hinge as compelled by the movement to and fro of the diaphragm to which its other end is attached?

Ans. I do.

Int. 11. The patent of 1876, speaking of Fig. 7, where the

apparatus referred to in fifth claim is shown, uses this language: "Another mode is shown in Fig. 7, whereby motion can be imparted to the armature by the human voice, or by means of a musical instrument." In the operation of this apparatus as you have investigated it, are the vibrations which go over the line such, in fact, as will be produced in the armature, whether the vibrations of the diaphragm be made by talking against it, or by playing a musical instrument close to it?

Ans. They are; so far as I could perceive, there was no variation in the kind of sound produced at the receiving end and in its pitch there, however great a variation might be made in the kind of sound at the transmitting end.

Int. 12. You say in your fourth answer, that the patent of 1876 "describes that one pair or several pairs of instruments may be used in connection with the same line wire," etc. Do you understand the statement which you make in the sentence I quote from, as to the capacity of sending messages in different pitches over the same line wire, to be true of the apparatus referred to in the fifth claim of complainants' patent?

Ans. I do, for the following reasons: The patent first describes the apparatus at Fig. 5, and that it produces a musical note of a certain definite pitch which is reproduced by the instrument at the receiving end. Next, the patent describes that a number of instruments may be placed upon a telegraphic circuit as in Fig. 6, where they are represented as being connected with one line wire; and the patent describes in substance that when the instruments are thus placed, or connected, they are to consist of pairs, the members of which correspond with each other in pitch, but differ in pitch from the members of the other pairs; the practical effect of which is that the messages which are sent through the transmitting member of one pair are made audible only by the receiving instrument of the same pair, whether one transmitting instrument or several be operated simultaneously. In the course of the description thus far referred to, one mode of putting the transmitting instruments in vibration is specifically mentioned, namely, by wind, while others (not specifically mentioned) are suggested. After the description of the connection of a number of instruments with the one circuit or line wire,

2487

the specification refers to the specific mode previously mentioned of setting the armature *c*, Fig. 5, in vibration by wind, and proceeds to describe another specific mode in which the same armature can be set in vibration by the human voice or by means of a musical instrument, namely, the mode represented in Fig. 7; and the description of this mode is not prefaced or succeeded by any language which directs or suggests that it is to be employed for any purpose different from the purposes for which the preceding instruments are described as being useful. Hence I understand that the mode represented in Fig. 7 is to be used in telegraphing in the same manner as the mode represented in Fig. 5, and that a number of the instruments, Fig. 7, may be placed upon a telegraphic circuit in the same manner and with the same effect as a number of instruments like Fig. 5. That is, that they may be combined together as represented in Fig. 6, and may be employed for the simultaneous transmission of a number of despatches in tones of different pitches, corresponding with those of the pairs of instruments connected in circuit.

Int. 13. Is the well-known Reis telephone an apparatus with which vocal sounds uttered against a stretched membrane may be transmitted telegraphically over a line wire by the vibrations of the stretched membrane operating to make and break the circuit?

Ans. It is.

Int. 14. In the Bell patent of 1876 I find, directly after the passage describing the arrangement upon the telegraphic circuit of a number of reeds each tuned to a normal rate of vibration, this: "I desire here to remark that there are many other uses to which these instruments may be put, such as the simultaneous transmission of musical notes differing in loudness as well as pitch, and the telegraphic transmission of noises or *sounds of any kind*." Do you understand that the instruments here referred to may be put to the use of the telegraphic transmission of vocal sounds uttered in the immediate neighborhood of the tune reeds?

Ans. I understand that they may, provided the vocal sounds be such as will cause the armatures to vibrate. Thus, for example, if a note should be sung by the human voice in the same pitch as the pitch of one of the transmitting instruments, a note of the same pitch would be emitted by the corresponding receiving instrument.

Int. 15. In such case any one tuned reed apparatus is acted upon directly by sound waves, originally produced, instead of being acted upon by those sound waves through the intermediate agency of the stretched membrane. Is that so?

Ans. It is.

Int. 16. Is there an advantage, and what is it, in the intermediate agency of a stretched membrane for the purpose of actuating a single armature when the motion to be imparted to it is to come from the human voice or a musical instrument played near by?

Ans. I understand that there is. Thus, the stretched membrane presents a large surface to the sound waves, and consequently a greater amplitude of vibration must be imparted through its agency to the vibrating armature attached to it than would be imparted if the stretched membrane should not be used. Such vibrations of greater amplitude by the armature must produce corresponding greater electrical undulations upon the line wire, and must be attended with correspondingly greater vibrations of the armature of the receiving magnet, that is, by vibrations of correspondingly greater amplitude; the result of which must be the emission of a louder tone at the receiving instrument.

Int. 17. In the experiments you have described with an apparatus constructed like that referred to in the fifth claim of the Bell patent of 1876, you spoke of using various strengths of battery, all the way from two cells to thirty: what is the ordinary strength of battery employed in practical working use of telephones?

Ans. I have been informed that it varies from two to three cells of a gravity battery, such as was used in the experiments.

Int. 18. Have you here the apparatus which you used in those experiments and which you say is constructed in exact conformity with the specification and drawings of the Bell patent of 1876, as respects the matters referred to in the fifth claim, with the additions you have mentioned?

Ans. I have, with the exception of the line wires and the battery. In the present condition of the instruments, the membranes are slack, probably from the action of the weather since the experiments were made; but when the experiments were made, the membranes were taut or tightly stretched, with the exception of such slacking of the

2989.

membrane of the transmitting instrument as was occasioned by continued use, as previously mentioned by me. I may also state that the pieces of brass intervening between the upper legs of the magnets and the cones are the brass straps mentioned by me previously, from which the armatures were suspended when making the sets of experiments numbered respectively 12 and 17. The armatures now on the instruments are those of medium weight which gave the best results. The lighter and extra heavy armatures which were used during the experiments are herewith produced. The instruments in their present conditions have the slide and screw adjustment referred to by me previously after my description of the experiments No. 4. Previous to the application of the slides and screws, the cones were connected with the wooden bases by means of screws passing directly through slots in the wooden bases, which slots may still be seen by turning the instruments upside down.

[*The apparatus referred to in the last answer is put in evidence for the defendant, marked "Defendant's Exhibit Bell Apparatus, of* 1876 *patent, Transmitter, W. C. W., Ex'r"; "Defendant's Exhibit Bell Apparatus, of* 1876 *patent, Receiver, W. C. W., Ex'r"; "Defendant's Exhibit Bell Apparatus, of* 1876 *patent, Alternative Armatures, W. C. W., Ex'r."*]

Int. 19. State whether or not you have examined and understand the contents of the following exhibits of defendants, to wit: "Wheatstone & Cooke Patent"; "Varley Patent"; "Edison Relay Magnet Patent"; "Extract beginning on page 257 and ending on page 258 from Ferguson's Electricity"; "Extract from Prescott's Electricity, pages 540 and 541"; and also whether you either heard or have read the testimony of William M. Goodridge as to the instruments produced by Elisha Gray, or under his direction, and understand the construction of the same?

Ans. I have examined a copy or the original of each of the documentary exhibits recited in the question, and believe that I understand the contents of the same. I was also present during the taking of the testimony of William M. Goodridge relative to the instruments produced by Elisha Gray, or under his direction, and I believe that I understand the construction of the same.

Int. 20. State whether, so far as you know, vibratory or undu-

latory currents of electricity had been employed for telegraphic purposes previous to the date (Feb. 14, 1876) of the application for Bell's patent, No. 174,465, of March 7, 1876; and if yea, in which one of the apparatuses or patents to which you have referred is apparatus for such use described or represented?

Ans. According to the descriptions found in some of the exhibits referred to in the previous question, vibratory or undulatory currents of electricity had been employed for telegraphic purposes previous to the date of the application for Bell's patent, No. 174,465, of March 7, 1876. An apparatus for such purpose is described in the defendant's Exhibit Varley Patent. Another apparatus is described in the defendant's Exhibit Wheatstone & Cooke Patent, in that portion thereof relating to Figs. 18, 19 and 20, commencing on page 28 of the English copy of the patent. Another apparatus is represented and described in the defendant's Exhibit Edison Relay Magnet Patent, in which case the electrical undulations are produced in one of the modes described in the Bell patent, No. 174,465, in the following words: —

"For instance, let mercury or some other liquid form part of a voltaic circuit, then the more deeply the conducting wire is immersed in the mercury or other liquid the less resistance does the liquid offer to the passage of the current. Hence the vibration of the conducting wire in mercury or other liquid included in the circuit occasions undulations in the current."

In the Edison patent referred to, the cup containing the liquid is designated *g*, and the wire which vibrates in that liquid, and is more or less deeply immersed therein, is designated *l*, and is constructed as a movable point or screw passing through the lever *f*.

Another apparatus is represented in the extract from Prescott's Electricity, pages 540 and 541, in which case an electro-magnet designated E is vibrated between the poles of a permanent magnet P, and thereby produces electrical undulations upon the line wire. I have known this apparatus to be called the Siemen's Telegraph, and the particular portion to which I have referred as producing the electrical undulations is called in the description the "magneto key." Enlarged views of this key, detached from the rest of the telegraph, are shown upon pages 502 and 503 of Prescott's work.

2991

Vibratory or undulatory currents of electricity were also employed for telegraphic purposes with the apparatus produced by Elisha Gray, or under his direction, as testified to by William M. Goodridge, namely, with defendant's Exhibit Gray's First Single Tone Transmitter, as used in the manner represented in defendant's Exhibit Gray's Closed Circuit Single Tone Transmission Apparatus, in connection with the various receiving instruments designated, respectively, defendant's Exhibit Gray's Resonant Box Magnet Receiver, defendant's Exhibit Gray's Concave Metallic Diaphragm Magnet Receiver, defendant's Exhibit Diaphragm Box Magnet Receiver, and defendant's wooden sounding box magnetic receiver, with the octagonal plate; also the apparatus referred to by Mr. Goodridge, in his answer to Int. 89, as operated in September, 1875.

Int. 21. State whether or not any of the exhibits, to which you have been referred, describe or represent an apparatus for transmitting, telegraphically, musical tones, and if yea, which of them.

Ans. Some of them do, namely, the Varley patent, in which case the signal-receiving instrument is represented at Fig. 2, said instrument having a tuned wire, which is described as "strained, so as to sound the same note as the tuning fork of the sending instrument." The tuned wire in this case was caused to vibrate and sound by the action of two horseshoe magnets placed one on each side of the wire. The Gray apparatuses were also employed for transmitting, telegraphically, musical tones, namely, each of the Gray apparatuses referred to by me in my last answer.

Int. 22. State whether you find described or represented in any of the said exhibits an apparatus by means of which signals are imparted to a line wire by the human voice operating a stretched membrane.

Ans. I do in one of them, namely, in the extract from Ferguson's Electricity, beginning on page 257 and ending on page 258, in which a description is given of the Reis telephone.

Int. 23. State whether any of the exhibits to which you have been referred describe or represent apparatus by means of which signals are transmitted telegraphically through a closed circuit, and by electrical undulations, and also the character of such signals.

Ans. Some of them do. Thus the Varley patent describes an

apparatus by which signals are transmitted and received through a closed circuit by electric undulations. The signals to which I refer are called in the said Varley patent wave signals, and according to the description, they were produced by very rapid alternations of current or electric waves. The signals were musical tones. The Edison relay magnet patent, No. 141,777, describes such an apparatus, in which case the signals were taps similar to those made by the sounder of a Morse telegraph. The apparatus described in the extract from Prescott's Electricity, pages 540 and 541, describes such an apparatus, in which case the signals received were in the form of written dots and dashes, produced by the action of the polarized ink writer, described in detail on pages 513 to 518 inclusive, commencing on page 513 with the paragraph headed, "The direct working polarized ink writer." The apparatuses of Mr. Gray, before referred to, were also apparatuses working through a closed circuit, and by electrical undulations, and the signals transmitted were musical tones.

Int. 24. State whether or not you have examined and understand the contents of the following exhibits of defendant, to wit: Gray's Reed Transmitter, Gray's Magnet Receiver, Gray's Sound Box Receiver patent, Gray's Closed Circuit patent.

Ans. I have examined a Patent Office copy of each of the exhibits referred to in the question, and I believe that I understand the contents thereof.

Int. 25. State whether said exhibits describe the employment of vibratory or undulatory currents of electricity for telegraphic purposes.

Ans. In my opinion, Gray's magnet receiver patent describes substantially such an apparatus, for the following reasons: In this case the signals were transmitted telegraphically from one station to another, through a closed circuit containing an induction coil. The signals were applied to the induction coil by instruments which made and broke in alternate succession the current of a local battery and thereby applied electrical impulses in rapid succession to the primary of the induction coil. The impulses thus imparted were in such rapid succession that the waves produced in the secondary of the induction coil must have been practically continuous, particularly in view of the fact that each closing of the local circuit produced an

2493

impulse in one direction in the secondary of the induction coil, while each break of the local circuit produced an impulse in the reverse direction in the secondary of the induction coil; and also in view of the fact that as the transmitting instruments produced musical tones, the closing and breaking of the local circuit must have occurred many times every second.

Gray's sounding box receiver patent describes an apparatus in which vibratory or undulatory currents of electricity were employed for telegraphic purposes; the undulation being produced by permitting a portion of the current of the battery to pass momentarily through one or other of the transmitting instruments.

Gray's closed circuit patent and Gray's reed transmitter patent are to be consided together in reference to the subject matter of the present question, because the former patent refers to the other patent as describing the transmitting instrument which may be used. With these transmitting instruments connected as represented and described in Gray's closed circuit patent, vibratory or undulatory currents of electricity were employed for telegraphic purposes; the undulations being produced by permitting a portion of the electric current to pass momentarily through one of the transmitting instruments.

Int. 26. State whether any of the above patents of Gray's, to which you have been referred, describe or represent apparatus by means of which signals are transmitted telegraphically through a closed circuit and by electrical undulations, and also the character of such signals.

Ans. In my opinion, Gray's magnet receiver patent describes substantially such an apparatus, for the following reasons. The main line described in this patent is a closed circuit, and, as stated in my previous answer, the electrical impulses in alternate directions which pass through this closed circuit from the transmitting station to the receiving station must pass in such rapid succession as to amount in substance to undulations. The character of the signals transmitted is musical tones, which either differ in pitch, or are made by short and long interruptions corresponding with the ordinary Morse signals.

Gray's sounding box receiver patent describes a telegraphic

apparatus by which signals are transmitted telegraphically through a closed circuit, and by electrical undulations, the signals having the character of musical tones of different pitches, and capable of being used in the same manner as Morse signals to represent the letters of an alphabet by intervals of greater or less length, and by tones of greater or less duration.

The Gray closed circuit patent, having the transmitters described in Gray's reed-transmitter patent, No. 165,728, describes an apparatus by means of which signals are transmitted telegraphically through a closed circuit, and by electrical undulations, the character of the signals being the same as those produced by the apparatus of Gray's sounding box receiver patent, last mentioned by me.

Int. 27. Have you examined the telephones put in evidence by the plaintiffs, and marked "Exhibits 6, 7 and 8," or duplicates thereof, and do you understand the operation of such instruments for telegraphic communication of articulate speech over the line wire, and if so, will you say whether or not they or either of them are substantially the same in construction or mode of operation as the apparatus recited in the fifth claim of the Bell patent of 1876, and give your reasons for your opinion?

Ans. I have examined the telephones referred to in the question and marked respectively Exhibits 6, 7 and 8, and I believe that I understand the operation of such instruments for the telegraphic communication of articulate speech over the line wire. In my opinion, no one of said instruments embodies in substance the apparatus recited in the fifth claim of the Bell patent of 1876, for the following reasons: That apparatus, as I understand the said Bell patent, is composed of or comprises all the members mentioned by me in my answer to Interrogatory 4, in the paragraph commencing with the words, "The apparatus thus recited"; and upon comparing the said Exhibits 6, 7 and 8 with the said apparatus I find that each differs from the said apparatus in the following particulars: Each of the said telephones does not have a steel spring armature, such as is described in the said Bell patent, fastened loosely by one extremity to the electro-magnet, but has a disc of metal held in front of the core of the electro-magnet. Each of the said Exhibits 6, 7 and 8 lacks any stretched membrane attached to an armature of a magnet,

2995

and has no equivalent or substitute for it for receiving the impulses of sound waves and applying them to the vibrating armature of an electro-magnet or of a permanent magnet. There is also, so far as I have been able to ascertain, a substantial difference in the mode of operation of the telephones, 6, 7 and 8, as compared with the apparatus referred to in the said fifth claim, as I understand the same, namely, that the said telephones are capable of transmitting all the tones required to produce articulate speech, whereas the apparatus referred to in the said fifth claim is capable of and is described as transmitting only tones of a certain pitch, peculiar to the steel spring armatures of the transmitting and receiving instruments. In forming my said opinion, I considered the question whether the metallic disc of Exhibits 6, 7 and 8 is the equivalent in each of those exhibits respectively for the stretched membrane of the apparatus referred to in the said fifth claim, and I am of opinion that the former is not, for the reason that it is not attached to an armature, such as the armature *c*, represented and described in the said Bell patent, and is not employed to impart motion to such an armature. I also considered the question whether the said metallic disc of said Exhibits 6, 7 and 8 could be properly considered as a substitute for the stretched membrane and armature *c* combined of the said apparatus of the fifth claim, at the transmitting end of the line; and I am of opinion that it cannot, for the reason that, up to the dates of the application and issue of the said Bell patent, so far as I know, it was not known to any person that a metallic disc, used in combination with either an electro-magnet or a permanent magnet, as it is in the said exhibits, was capable of causing electrical undulations in a line wire which corresponded with a musical note sounded, or with any sound produced, in front of such a disc.

I am also of opinion that the said disc cannot be properly considered a substitute or equivalent for the stretched membrane and steel armature *h* at the receiving end of the line of the apparatus referred to in said claim 5, because if a number of such metallic disc instruments should be placed as receivers in a voltaic circuit, as in Fig. 6, and sound should be transmitted through the said circuit by a number of transmitting instruments capable of producing musical

notes of different pitches, the result described in the said Bell patent would not be attained. That is, each receiving instrument would not produce a sound corresponding to that of one only of the transmitting instruments, but all of the said receiving instruments would sound simultaneously, no matter which one of the transmitting instruments was operated.

[*Adjourned to Saturday, April* 26, *at* 10 *A. M.*]

NEW YORK, April 26, 1879.

Int. 28. State briefly what you understand to be the "method" referred to in the said fifth claim, and whether such method is involved or practised in the use of the defendant's telephones, Exhibits 6, 7 and 8.

Ans. The method of accomplishing the object is to impart motion by the human voice, or by means of a musical instrument, to a vibrating armature, which produces a musical note of a certain definite pitch, which armature causes, by its vibration, electrical undulations in the coils of the electro-magnet at the transmitting station, to conduct these undulations to the receiving station by line wire; to cause, by means of an electro-magnet, corresponding vibrations at the receiving station in a vibrating armature capable of producing a musical note in unison with that produced by the armature at the transmitting station, and to impart the vibrations of the said armature at the receiving station to a stretched membrane, so that sound waves of larger volume are produced than if the armature should be used unattached to said membrane.

Int. 29. In the drawing, Fig. 7, in the Bell patent of 1876, the pole of the magnet, at both the transmitting and the receiving station, is not opposite that end of the hinged armature which is attached to the membrane, but is opposite a point from one third to one half the distance from such point of attachment to the point of hinging of the armature. Will you explain what advantage, if any, may be gained as to the described operation of the apparatus from such peculiar relative location?

Ans. The arrangement referred to gives the membrane at the transmitting station a mechanical advantage over the magnetic force

2995

and has no equivalent or substitute for it for receiving the impulses of sound waves and applying them to the vibrating armature of an electro-magnet or of a permanent magnet. There is also, so far as I have been able to ascertain, a substantial difference in the mode of operation of the telephones, 6, 7 and 8, as compared with the apparatus referred to in the said fifth claim, as I understand the same, namely, that the said telephones are capable of transmitting all the tones required to produce articulate speech, whereas the apparatus referred to in the said fifth claim is capable of and is described as transmitting only tones of a certain pitch, peculiar to the steel spring armatures of the transmitting and receiving instruments. In forming my said opinion, I considered the question whether the metallic disc of Exhibits 6, 7 and 8 is the equivalent in each of those exhibits respectively for the stretched membrane of the apparatus referred to in the said fifth claim, and I am of opinion that the former is not, for the reason that it is not attached to an armature, such as the armature *c*, represented and described in the said Bell patent, and is not employed to impart motion to such an armature. I also considered the question whether the said metallic disc of said Exhibits 6, 7 and 8 could be properly considered as a substitute for the stretched membrane and armature *c* combined of the said apparatus of the fifth claim, at the transmitting end of the line; and I am of opinion that it cannot, for the reason that, up to the dates of the application and issue of the said Bell patent, so far as I know, it was not known to any person that a metallic disc, used in combination with either an electro-magnet or a permanent magnet, as it is in the said exhibits, was capable of causing electrical undulations in a line wire which corresponded with a musical note sounded, or with any sound produced, in front of such a disc.

I am also of opinion that the said disc cannot be properly considered a substitute or equivalent for the stretched membrane and steel armature *h* at the receiving end of the line of the apparatus referred to in said claim 5, because if a number of such metallic disc instruments should be placed as receivers in a voltaic circuit, as in Fig. 6, and sound should be transmitted through the said circuit by a number of transmitting instruments capable of producing musical

notes of different pitches, the result described in the said Bell patent would not be attained. That is, each receiving instrument would not produce a sound corresponding to that of one only of the transmitting instruments, but all of the said receiving instruments would sound simultaneously, no matter which one of the transmitting instruments was operated.

[*Adjourned to Saturday, April 26, at 10 A. M.*]

NEW YORK, April 26, 1879.

Int. 28. State briefly what you understand to be the "method" referred to in the said fifth claim, and whether such method is involved or practised in the use of the defendant's telephones, Exhibits 6, 7 and 8.

Ans. The method of accomplishing the object is to impart motion by the human voice, or by means of a musical instrument, to a vibrating armature, which produces a musical note of a certain definite pitch, which armature causes, by its vibration, electrical undulations in the coils of the electro-magnet at the transmitting station, to conduct these undulations to the receiving station by line wire; to cause, by means of an electro-magnet, corresponding vibrations at the receiving station in a vibrating armature capable of producing a musical note in unison with that produced by the armature at the transmitting station, and to impart the vibrations of the said armature at the receiving station to a stretched membrane, so that sound waves of larger volume are produced than if the armature should be used unattached to said membrane.

Int. 29. In the drawing, Fig. 7, in the Bell patent of 1876, the pole of the magnet, at both the transmitting and the receiving station, is not opposite that end of the hinged armature which is attached to the membrane, but is opposite a point from one third to one half the distance from such point of attachment to the point of hinging of the armature. Will you explain what advantage, if any, may be gained as to the described operation of the apparatus from such peculiar relative location?

Ans. The arrangement referred to gives the membrane at the transmitting station a mechanical advantage over the magnetic force

2991

of the electro-magnet; and when the magnet has a given amount of force, and consequently exerts a corresponding attractive force upon the armature, enables the membrane to operate the armature when adjusted closer to the core of the magnet than it could be if this mechanical advantage was not attained. At the receiving station the arrangement mentioned enables the armature to impart vibrations or movements of greater amplitude to the stretched membrane at that station, than would be the case if the place of attachment of the membrane to the armature was directly opposite the core of the electro-magnet, and thus increases the volume or amplitude of the waves in the air produced by the movement of the membrane.

Int. 30. Will you now go to the Bell patent of 1877 and taking first the third claim thereof, state what you understand to be the combination and its purpose and operation, there mentioned, referring to the body of the specification or drawings, as you find desirable, and state how far, if at all, you find the same thing substantially in any of the Gray receiving instruments hereinbefore mentioned, or in his patents No. 179,549 and No. 198,379, giving your reasons fully for your opinions.

Ans. As I understand the said Letters Patent, No. 186,787, the combination recited in the said third claim is composed essentially of two devices which, when combined, produce the instrument called in the patent an "electric telephone." The two devices which are thus combined are an electro-magnet (or a permanent magnet, having a coil of wire upon it like the coil of an electro-magnet) and a plate of iron, steel or other material, capable of inductive action, which can be thrown into vibration by movement of the surrounding air, or by the attraction of a magnet. The combination is made by supporting the said plate in front of the core of the said magnet.

The purpose of this combination is to transmit or receive sounds, made in the neighborhood of the said plate, to or from a circuit, with all the inflections, both of pitch and quality, peculiar to such sounds, so that a single instrument is capable of either transmitting to an electric circuit, or of receiving therefrom, both musical sounds of different pitches and the exact sounds of articulate speech, the instrument being thus a universal telephone, which is not limited to the transmission or reception of a sound or musical note of one definite

pitch peculiar to itself, but has the capacity of transmitting and receiving sounds and musical notes of different pitches.

The operation of the combination when used as a transmitter, as I understand the patent, is to cause electrical undulations which correspond with all the variations of sound waves produced in the neighborhood of the inductive plate; and, when used as a receiver, its operation is to cause sound waves to be produced corresponding with all the variations of electrical undulations which can be transmitted through the electric circuit. Hence, as stated in the patent, when this instrument is employed, "it is no longer necessary to have separate instruments correspondingly tuned for each given sound, which plan requires nice adjustment of the corresponding instrument, while the present improvement admits of a single instrument at each station; or if, for convenience, several are employed, they are all alike in construction and need not be adjusted or tuned to particular pitches."

The combination, in one of its simplest forms, is described as being represented at Fig. 4 of the patent by any one of the four telephones there shown.

I find that substantially the same combination is embodied in the following Gray receiving instruments, namely: First, defendant's Exhibit Gray's Resonant Box Magnet Receiver, in which the magnet, whose legs are surrounded by coils of wire, corresponds with the electro-magnet, or permanent magnet provided with coils of wire, which constitutes the first member of the combination of the said third claim; while the bottom of the tin box, which is composed of tinned sheet iron, corresponds with the plate of iron or steel, capable of inductive action, which constitutes the second member of the combination of the said third claim. The combination of the said two devices of the said defendant's exhibit, when in use, as testified to by Mr. Goodridge, is substantially the same as that required by the said claim. Thus, according to one of the modes described by Mr. Goodridge, the induction plate was combined with the magnet so as to be at a slight distance from the poles thereof. In another of the modes the induction plate rested on the poles of the magnet, but was not attached thereto, and was not fitted and held thereto so as to prevent its vibration by sound, or the generation of electrical un-

2997

dulations in the coils of the magnet by such vibration. In fact, the vibrations of an induction plate produced by the action of sound are, so far as I know, so minute that it would be practically impossible to prevent them from creating electrical undulations in the coils of the magnet when the plate was made of tinned plate, which has a more or less irregular surface, however smoothly the ends of the cores of the magnets upon which the said plate rested might be made. Although contact exists between some portions of the induction plate and the surfaces of the poles of the electro-magnet when the tin box rests directly upon the said poles, yet this, in my opinion, does not make the combination of electro-magnet and induction plate, existing in the said defendant's exhibit in that condition, substantially different from that required by the said third claim, because I have found by practical trials that the same result in kind is attained whether the combination be in this condition, or be employed with the induction plate at a slight distance from the poles of the magnet, the only difference being a slight one in degree; and because, further, the said patent No. 186,787, as I understand the same, does not restrict the said combination to one in which there is no contact whatever between the induction plate and the pole or poles of the magnet, but considers that arrangement or condition only as important; by which I understand is meant important for the production of the best possible effect.

In forming my opinion on this subject, I took into consideration the fact that in the said defendant's Exhibit Gray's Resonant Box Magnet Receiver, the induction plate forms a part of a box which operates as a resonator, while a resonator is not recited in the said third claim. I do not, however, consider this difference as material,

First. Because it does not change in substance the mode of operation of the induction plate and electro-magnet, or the result attained by their use; and, second, because the said patent, No. 186,787, describes in substance that a resonator may be used in connection with the telephones described therein.

Second. Defendant's Exhibit Gray's Concave Metallic Diaphragm Magnet Receiver, in which the magnet whose legs are surrounded by coils of wire corresponds with the electro-magnet (or permanent magnet) which constitutes the first member of the combination of

the said third claim, while the flat upright plate in front of the said magnet in said exhibit (which plate is composed of tinned sheet iron) corresponds with the plate of iron or steel capable of inductive action, which constitutes the second member of the combination of the said third claim. In the case of this instrument, the combination is identical with that required by the said claim, even if it should be restricted by legal construction to the arrangement in which (using the language of the patent) "the distance of the magnet from the plate should be as little as possible without, however, being in contact." Because this defendant's exhibit contains means of adjustment, and a frame whereby the said arrangement can be produced and maintained, and (as I understand the testimony of Mr. Goodridge) was so produced and maintained when the instrument was in use. The means of adjustment in the said defendant's Exhibit Gray's Concave Metallic Diaphragm Magnet Receiver, to which I have referred, are the screws by whose action the adjustment of the magnet and inductive plate relatively to each other can be produced and maintained.

When forming my opinion as to this defendant's exhibit, I took into consideration the fact that it differs in form from any one of those represented in the drawings of the patent, but I am of opinion that this difference does not prevent it from embodying, in substance, the combination recited in the said third claim of the patent 186,787, for the reason that the said patent makes a provision for such changes in the following words: —

"I have shown the apparatus in one of its simplest forms, it being well understood that the same may be varied in arrangement, combination, general construction and form, as well as material of which the several parts are composed."

Third. Defendant's Exhibit Diaphragm Box Magnet Receiver, the internal magnet of which corresponds with the electro-magnet, or permanent magnet, which constitutes the first member of the combination of the said third claim, while the flat head of the tin box (which is of tinned iron) is a plate of iron, capable of inductive action, corresponding with that which constitutes the second member of the said combination. In the case of this defendant's exhibit, the combination is identical with that required by the said third claim,

3001

even if it should be restricted by legal construction to one in which the arrangement of the members of the combination is such that (to use the language of the patent), "the distance of the magnet from the plate should be as little as possible, without, however, being in contact"; because in the said defendant's exhibit the same arrangement exists, and as I understand the testimony of Mr. Goodridge, the instrument was used with the induction plate arranged at a short distance from the electro-magnet, means being provided by which the adjustment could be made and maintained. The means to which I refer are the connection of the magnet with the wooden head of the box by a screw, and the liners introduced between the cross bar of the magnet and the adjacent face of the wooden head of the box.

When forming my opinion as to this defendant's Exhibit Diaphragm Box Magnet Receiver I took into consideration the difference in form between it and any one of the telephones represented in said patent, No. 186,787; but I am of the opinion that this difference is immaterial in reference to the subject matter of the said third claim, for the same reasons which I have given in reference to defendant's Exhibit Gray's Concave Metallic Diaphragm Magnet Receiver. I also took into consideration the fact that in said defendant's Exhibit Diaphragm Box Magnet Receiver, the induction plate forms a part of a box which encloses and is a cover for the magnet; but I am of opinion that this fact does not prevent this exhibit from embodying in substance the combination of the said third claim, because of the provision in the patent before referred to by me, —.and because in the first telephone represented in the drawing of the patent, the induction plate A, there represented, forms a part of a similar box which encloses and is a cover for the magnet.

Fourth. Gray's wooden sounding box magnet receiver, as first constructed with defendant's Exhibit Gray's Octagonal Plate, in front of the poles of the electro-magnet. In this exhibit the electro-magnet corresponds with the electro-magnet or permanent magnet, which constitutes the first member of the combination of the said third claim, while the octagonal plate which was combined with it corresponds substantially with the induction plate which constitutes the second member of the combination of the said third claim.

When forming my opinion as to this exhibit, I took into consider-

ation the fact that it differs in form and construction from any one of the telephones represented in the drawings of said patent, No. 186,787; but I am of opinion that these differences do not prevent the said defendant's exhibit from embodying in substance the combination of the said third claim, because the said patent provides for such differences by the language previously quoted by me when speaking in reference to deft's Exhibit Gray's Concave Metallic Diaphragm Magnet Receiver.

Fifth. I am of opinion that the apparatuses represented at Figs. 17, 18 and 19, of Gray's patent, No. 179,549, embody in substance the combination of devices recited in the said third claim of the Bell patent, No. 186,787, for the following reasons: After the specification of that Bell patent has described all of the different forms of telephones represented in the drawings, Figs. 1 to 6 inclusive, in every one of which the induction plate is designated by the same letter, A; and after it has described that these telephones may be employed to transmit or receive musical sounds, the duration of which may signify the dot or dash of the Morse alphabet; and has further described that "the present improvement admits of a single instrument at each station"; there occurs the following language: "In lieu of the plate A in above figures, iron or steel reeds of definite pitch may be placed in front of the electro magnet O, * * * " As I understand this language, it amounts to a direction that in lieu of the plate A two or more iron or steel reeds of definite pitch may be placed in front of one electro-magnet, the practical effect of which would be that a single instrument at each end of the line would transmit or receive two or more musical sounds, produced simultaneously or separately, and would thus dispense with the necessity of employing separate instruments for each given sound, thereby accomplishing one of the purposes of the invention described in the said Bell patent, and enabling telegraphing to be done in one of the modes described in the portion of the patent preceding said quoted language, namely, by the production of musical sounds, the duration of which signifies the dot or dash of the Morse alphabet. Hence, as I understand the said patent, the combination of one electro-magnet (or of a permanent magnet fitted with a coil or coils of wire) with a series of steel reeds of definite pitches placed

3003

in front of it is, by the language of the said patent, made the substantial equivalent of the combination of one magnet with a single plate. Now, I find represented at Figs. 17, 18 and 19 of the said Gray patent, No. 179,549, instruments each of which has a single electro-magnet combined with a series of steel reeds of definite pitches. In these instruments the poles of the magnets are enlarged or extended laterally by the addition of what may be termed pole pieces C^2, C^3, and the steel reeds are the upright pieces which are represented in the drawing in front of these pole pieces, and are designated by numbers. When the said reeds are caused to vibrate at the receiving end, they operate circuit breakers, which actuate, or, more properly, bring into operation registering apparatus, namely, a printing mechanism, thus performing an operation which is described in the said Bell patent, No. 186,787, as performed by one of the modifications of his apparatus in the following sentence: "The vibrations of the membrane may be made to operate a circuit breaker, which will actuate a Morse sounder or a telegraphic recording or registering apparatus."

Sixth. Having in view the same understanding of the Bell patent, No. 186,787, which I have mentioned in reference to the patent to which I have referred as fifth, I am of opinion that the apparatus represented in Gray's patent, No. 198,379, embodies in substance the combination recited in the said third claim by describing an apparatus which contains what I understand the said Bell patent to describe as an equivalent combination, namely, one in which a single electro-magnet is combined with a number of steel reeds of definite pitches placed in front of it, so that when musical signals are transmitted, as described in the said Bell patent, a single instrument may be used at each station. In the apparatus described in the said Gray patent, No. 198,379, the electro-magnet, indicated by the letter D, corresponds with the electro-magnet recited in the third claim of the Bell patent, while the tuned receiving springs in front of the said electro-magnet correspond with the steel reeds of definite pitch, which the language of the Bell patent, before quoted by me, describes, may be used "in lieu of the plate A" in the figures of the drawing representing telephones, all of which are described

before the said language occurs in the specification, and all of which I understand to be referred to by the words, "in above figures."

The Gray patent, No. 193,379, represents in the drawing but two "tuned" "ribbons," "springs" or "bars," but the specification of the patent states that "it is obvious that one or more magnets would operate two or more tuned reeds or bars," thus indicating that the patentee contemplated the combination in a single instrument of any desired number of such reeds or bars.

All of the above mentioned exhibits, as I understand Mr. Goodridge's testimony and the patents, were used as receiving instruments alone, but, in my opinion, this fact is immaterial in reference to the subject matter of the third claim of the Bell patent, No. 186,787, because, as I understand the same, so long as the combination recited in it exists, the purpose for which it is used is immaterial, and because each of the said exhibits and each of the apparatuses described in the two patents of Gray, referred to in the question, was used, or is described as to be used, for one of the purposes mentioned in the said Bell patent, No. 186,787, namely, as a receiver for sound signals.

Seventh. According to the same understanding of the said Bell patent, No. 186,787, which I have mentioned in a previous part of my answer under division sixth, the two octave multiple transmitter, referred to by Mr. Goodridge in his answer to Interrogatory 38, and designated defendant's Exhibit Gray's Two-Octave Transmitter, embodies in substance the combination recited in the said third claim of said patent, No. 186,787, or perhaps, more properly speaking, contains in substance a number of substantial embodiments of the said third claim. In this exhibit each of the electro-magnets corresponds with the electro-magnet recited as the first member of the combination of the said third claim; while each of the sets of two and three reeds, which in that exhibit are combined with a single electro-magnet, constitutes, according to the language of the said Bell patent previously quoted by me, a substantial equivalent for the plate (A), which is recited as the second member of the said combination, and is the device mentioned in the said quoted language in lieu of which the steel reeds of definite pitch may be placed in front of the electro-magnet. The said defendant's exhibit contains a

3005

series of such instruments of different pitches combined together, so as to form one compound instrument with a key-board for manipulating it. This fact, however, does not, in my opinion, prevent each of what may be termed the divisions of the said instrument from embodying in substance the equivalent of the said third claim, described in the language of the Bell patent before quoted by me; because the building up of a number of said combinations into a compound instrument does not change the mode of operation and construction of each combination individually; and because the language of the said Bell patent contemplates the employment of a number of such combinations in a series, as appears from the following language: "In lieu of the plate A in above figures, iron or steel reeds of definite pitch may be placed in front of the electro-magnet O, and in connection with a series of such instruments of different pitches, * * * "

This two-octave transmitter was employed as a transmitting instrument for transmitting musical notes or signals, so that the combinations in it were employed for one of the purposes referred to in the Bell patent, No. 186,787.

[*Counsel for defendant puts in evidence an extract from paper read by Professor Alexander Graham Bell, October* 31, 1877, *before the Society of Telegraph Engineers, entitled "Researches in Electric Telephony," and the same is marked "Defendant's Exhibit Second Extract from Bell's London Lecture, W. C. W., Ex'r." The paper in question is printed in the journal of the Society of Telegraph Engineers, No.* 20, *Vol.* 6, *and the extract put in evidence is on pages* 402 *and* 403, *commencing with the words, "I therefore devised," and ending with the words, "before venturing to have it made."*]

Int. 31. Will you look at the extract from Professor Bell's lecture, just put in evidence, and say if you find there described the application of any and what apparatus described in Bell's patent of 1877 to the use of the telephonic transmission of vocal sounds?

Ans. I find described and represented in the exhibit mentioned in the question an apparatus for the transmission through and reception from a line wire of vocal sounds, the transmitting and receiving instruments being duplicates of each other, and called harps. Each

of these instruments is a combination of one electro-magnet fitted with a coil of wire, with a series of steel rods, capable of vibrating and producing sounds of different pitches, and secured to a permanent magnet. The steel rods of the receiving instrument, or harp, and the steel rods of the transmitting instrument are respectively in unison, and the two harps or instruments are connected by the line wire, and with ground wires, so as to constitute an electric circuit. The description states that "when any one of the rods is thrown into vibration an undulatory current is produced in the coils of the electro-magnet E" (at one end of the circuit), "and the electro-magnet E′" (at the other end of the circuit) "attracts the rods of the harp H′ with a varying force, throwing into vibration that rod which is in unison with that vibrated at the other end of the circuit." The description further states that the amplitude of vibration of the one rod will determine the amplitude of vibration of the other, and describes the transmission and reproduction of vocal sounds by means of the apparatus, in the following words: "Utter a sound in the neighborhood of the harp H" (at one end of the circuit), "and certain of the rods would be thrown into vibration with different amplitudes. At the other end of the circuit the corresponding rods of the harp H′ would vibrate with their proper relations of force, and the *timbre* of the sound would be reproduced."

[*Adjourned to Monday, April* 28, 1879, *at* 10 *A. M.*]

NEW YORK, April 28, 1879, 10 A. M.

Int. 32. I call your attention now to the sixth claim of the second Bell patent, namely, "The combination, with an electric telephone such as described, of a sounding box, substantially as herein shown and set forth." Mr. H. B. Renwick, at the foot of page 23 of the printed record, says of this cover or sounding box, that it "encloses that end of the diaphragm which is farthest from the speaker at one end, or the hearer at the other, and thus prevents vibrations of the air, due to noises in the room or other causes, from affecting the vibration of the diaphragm." If there is any practical liability to undesigned vibrations of the diaphragm when it is not enclosed, is it liable to such vibrations to be produced from the side of the diaphragm which is *nearest* to the speaker at one end, or the hearer at

3007

the other, as well as on the side which is *farthest* from him? And if yea, explain why.

Ans. The diaphragm is liable to be influenced quite as much by undesigned vibrations or extraneous noises, made at the side which is nearest to the speaker or to the hearer, as it is at the opposite or rear side. Because the speaking tube E separates the speaker or hearer from the diaphragm, so that if the diaphragm is not protected at its face side by a cover, extraneous noises would pass to it all around the end of the speaking tube nearest the diaphragm, which end is less in diameter than the coil of wire G at the back of the diaphragm, and therefore would protect the diaphragm or plate from noises in front, to a less extent than the intervention of the coil of wire G would protect it from noises in the rear of the plate or diaphragm.

Int. 33. If there is any practical liability to extraneous vibrations of the diaphragm, such as Mr. H. B. Renwick says the sounding box in the Bell patent protects the diaphragm from on the side farthest from the speaker or hearer, what is it in the said patent which protects the diaphragm from such extraneous vibrations on the other side?

Ans. It is the square piece of wood which, in the telephone represented at Figs. 1, 2 and 3 of the said Bell patent, covers the front or face of the diaphragm, and is perforated only by a hole in which the end of the speaking tube E is inserted. This front board covers the front of the diaphragm, and protects it from all noises or vibrations in front, except the sounds which are purposely applied through the speaking tube E.

Int. 34. Assuming for the present that there is practical advantage in covering the diaphragm with a so-called sounding box which protects it from extraneous vibrations, will you state whether you find, in any of the instruments testified as used by Mr. Gray prior to the Bell patent, the combination with an electric telephone (having an electro-magnet and a plate of inductive metal or its equivalent, as mentioned in Bell's third claim) of a sounding box which protects the diaphragm or its equivalent from such supposed extraneous vibrations? And, if so specify the instrument and explain its similarity in this respect to the Bell arrangement.

Ans. If the covering with the so-called sounding box includes the covering of the rear side only of the diaphragm or plate, then I find that substantially the same covering or box is found in the defendant's Exhibit Diaphragm Box Magnet Receiver. This instrument contains an electric telephone, such as is described in the said Bell patent, No. 186,787; that is, an electric telephone composed essentially of an electro-magnet, and a plate of iron supported in front of the said electro-magnet, at a short distance from the poles or core thereof; the magnet within the box being such electro-magnet, and the perforated head of tin plate or tinned iron being the plate of iron capable of inductive action.

The covering in this defendant's exhibit is formed by the cylindrical wall of the box and the wooden head thereof, which protect the rear side or back of the induction plate from noises or vibrations which are produced at that side of the instrument.

The said Bell patent, as before stated by me, contains the statement that "in lieu of the plate A" (the induction plate) "in above figures" (which are all the figures represented in the drawings of the patent), "iron or steel reeds of definite pitch may be placed in front of the electro-magnet O * * *," which statement, as previously explained by me, under division fifth of my answer to Interrogatory 30, amounts in substance to a statement that the patentee considers two or more steel reeds, when placed in front of one electro-magnet, as a substitute or equivalent for the induction plate A; and therefore, as I understand the patent, this substitute is included by the language of the claims. Therefore, I am of opinion that the defendant's Exhibit Gray's Two-Octave Transmitter contains in substance the combination with an electric telephone (having an electro-magnet and the substitute or equivalent mentioned in Bell's patent for a plate of induction metal) of a sounding box which protects the equivalent or substitute for the diaphragm from the supposed extraneous vibrations mentioned in the question. In the case of this defendant's exhibit, each of the electro-magnets corresponds with that required by the said claim; and each set of two or three steel reeds of definite pitch, which are placed in front of one of those electro-magnets, corresponds with the substitute or equivalent for the induction plate A mentioned in the sentence of the

3059

said Bell patent above referred to by me. In this defendant's exhibit, also, there is a cover or sounding box which covers each electro-magnet and each set of reeds which is combined with one electro-magnet, and protects these reeds (which, according to the said sentence of the Bell patent, are a substitute for the induction plate) from the action of extraneous vibrations. When the cover is closed, these Bell substitutes or equivalents for the induction plate are protected from such extraneous vibrations both in front and rear. When the cover is raised so as to be upright, it protects the said Bell substitutes for the induction plate from extraneous vibrations made at their rear.

Int. 35. Do you believe that there exists in practice any such liability as Mr. H. B. Renwick says the sounding box in the Bell patent provides for, namely, liability of the diaphragm, either at the end farthest from the speaker or hearer, or at the end nearest to him, to have its designed vibrations affected by undesigned or extraneous vibrations, "due to noises in the room or other causes"; and will you describe any practical observations you have made for the purpose of testing your judgment upon this matter?

Ans. I do not believe that in practice any such liability exists. I have experimented with two forms of Bell telephone, which I was informed were manufactured by the Bell Telephone Company, such experiments being made by me in company with Mr. William M. Goodridge and Frank L. Pope. The experiments were made in a noisy locality, the instruments being tested with and without the covers and both as transmitters and receivers. With one form of instrument I could not distinguish any difference in either the distinctness or loudness of the sounds transmitted or received, whether the cover was on the instrument or removed from it. With the other form of instrument, I could not distinguish any difference whatever in any trial, but one, in which both the mouth piece and cover, or plate in front of the metallic plate, were removed as well as the entire covering in the rear of it. With the instrument in this condition, and used as a receiver, the articulation was materially more distinct without any cover in the rear of the metallic plate than when the cover at that side was in place.

Int. 36. Coming now to the seventh claim of the second Bell

patent, namely, "In combination with an electric telephone, as herein described, the employment of a speaking or hearing tube for conveying sounds to or from the telephone, substantially as set forth," this speaking tube, which is marked "E" in the patent, Mr. H. B. Renwick says, in his opinion, "really means the tubular orifice through which the sound waves are sent in connection with the chamber at the end of that orifice where the sound waves act upon the diaphragm." State whether you think that the speaking tube E really includes the chamber, being, as I understand it, the space between the front face of the diaphragm and what you have spoken of as a part of the sounding box or cover, within which space the vibrations of the diaphragm take place.

Ans. In my opinion, the speaking tube E, mentioned in the patent, does not include the chamber referred to, because the chamber is not what would be commonly called or understood as any part of a tube, and because there is no statement or suggestion in the patent that the speaking tube mentioned includes the square piece of board into which its end is inserted, and whose inner side forms a shallow square chamber in front of the plate or diaphragm. Thus, the only language that I have found in the patent in relation to the speaking tube are the following sentences: "E represents a speaking tube by which sounds may be conveyed to or from the plate A"; "—— for convenience of operation through the speaking tube E"; "to listen to his telephone preferably through the speaking tube E"; "to convey an articulate message it is only necessary for an operator to speak in the neighborhood of his telephone, preferably through the tube E"; lastly, the words in the claim, "the employment of a speaking or hearing tube for conveying sounds to or from the telephone." The drawings show the letter E placed upon the tube only; and in the absence of any special description to the contrary, I understand the speaking tube referred to is that tube, and does not comprehend the plate or board to which it is attached; which, so far as the tube is concerned, is simply a means for holding it in place, and might, according to my understanding, be replaced by any other suitable device for that purpose without changing substantially the character of the speaking tube described or its combination with the telephone. If, for example, the said plate or board should be re-

3011

moved, and a narrow bridge straddling the plate, or a single arm projecting from one side of the plate A to the end of the speaking tube should be employed in the telephone represented at Figs. 1, 2 and 3, the combination recited in the said seventh claim would, in my opinion, exist as certainly as it does in the instrument constructed with a square plate or board; yet, in the case of each of said substitutions, there would be no enclosed chamber at the front side or face of the induction plate or diaphragm A.

Int. 37. Assuming that the chamber forms no part of the speaking tube, will you refer to the Bell patent of 1876, and say whether you find there substantially the same speaking tube to speak through or listen through, in combination with a diaphragm, towards which vibrations produced by vocal sounds are directed or from which they are received?

Ans. Whether I do or do not depends upon how much or how little is understood to be comprehended by the term speaking tube. If, for example, the term, speaking tube, is understood to comprehend what is commonly termed a mouth piece, by means of which sounds spoken into it are prevented from spreading laterally, and are thus concentrated, then I find that the transmitting instrument represented at Fig. 7 of the Bell patent of March, 1876, has in the cone A (which, as stated in the said patent, "is used to converge sound vibrations upon the membrane") substantially such a speaking tube. And, in like manner, I find that the cone L of the receiving instrument of the said Bell patent of 1876 is such a tube for listening. If, on the other hand, the term, speaking tube, be employed in the ordinary acceptation in which it is generally used, that is, to denote a pipe of considerable length in proportion to its diameter for the purpose of conveying sound, then I should be of opinion that a mere mouth piece or ear piece, such as are represented at Fig. 7 of the Bell patent of 1876, would not amount in substance to such a speaking tube.

Int. 38. Will you refer now to the description and drawing of the Reis telephone, on pages 257 and 258 of Ferguson's "Electricity," and state whether you find there a speaking tube, and whether with or without a chamber, for the purpose of converging vocal sound to a diaphragm for the purpose of the electrical transmission of such

sound, the tube or tube and chamber performing the same office, with reference to that diaphragm, as is done in the case of the Bell patent of 1877? And state, in connection with your answer, whether or not and why you agree with Mr. H. B. Renwick, where he says, beginning at foot of page 46 of the record, "The box of Reis is so great in capacity, and extends so far downwards below the diaphragm, that it will not act practically to concentrate the effect of the air undulations upon the face of the diaphragm," etc.

Ans. I find in the said Reis telephone described in Ferguson's work a speaking tube, namely, the short, straight, cylindrical tube between the mouth piece M and the wooden box A. I also find that in said Reis telephone the said speaking tube is used in connection with a chamber for the purpose mentioned in the question, such chamber being the interior of the box A, and the diaphragm being the piece of the bladder S, which closes the large hole at the top of the said chamber.

I do not agree with the opinion expressed by Mr. H. B. Renwick as stated in the question, for the following reasons: The drawing shows that the speaking tube, extending from the mouth piece M to the box A forming the chamber, inclines downward or in a direction away from the said diaphragm; consequently, the tube directs the sound waves away from the diaphragm. If, under such circumstances, the sides and bottom of the chamber should be removed, and a skeleton support for the diaphragm should be substituted in their place, the sound waves would be permitted to escape laterally and downward, and a large portion of their force would not act upon the diaphragm. Whereas, when the sides and bottom of the box or chamber A are in place, as represented in the drawing of the Reis telephone, the sound waves are confined and must of necessity operate with greater force upon the stretched membrane or diaphragm than they would if the sides and bottom of the box were removed.

Int. 39. Mr. H. B. Renwick says at the top of page 26 of the printed record, with reference to the speaking tube E, that the chamber in front of the diaphragm "is absolutely essential in order that the tubular part of the contrivance may convey the sound waves to the diaphragm." What is your opinion as to the importance of the

3013

chamber or as to the importance of the mouth piece as to the matter of distinct and loud speaking or hearing; and what, if any, experiments have you tried bearing upon this question, and with what results?

Ans. Some of the experiments before referred to by me in my answer to question 35 were made with the mouth piece and front of the box in their places, so that whatever chamber was formed by the front of the box existed in the instrument. Others of the experiments were made with the same instrument with the mouth piece removed, and so much of the front of the box as covered the metallic plate also removed; so that no enclosed chamber existed in front of the metallic plate. I was not able to perceive any difference either in the distinctness of articulation or in the loudness of the tone, either transmitted or received, when the instrument was in two different conditions, from which I infer that neither the mouth piece nor the chamber in front are essential. If a tubular mouth piece with a speaking tube be used in order to convey sounds from a distance to the metallic plate or diaphragm, then some device must, of course, be employed to hold the end of the speaking tube to the diaphragm or plate; but in my opinion a chamber in front of the diaphragm is not essential for this purpose; and a narrow bridge straddling the diaphragm, or an arm for the purpose of holding the end of the tube, would, in my opinion, answer all practical purposes.

Int. 40. You spoke of the room where these experiments and the other experiments mentioned today were tried, as a noisy room. Please tell us something more about it, tending to show whether it was or was not a room the conditions of which would furnish a severe test of the telephone apparatus used there.

Ans. The transmitting and receiving instruments were in two rooms of the shop of the Western Electric Manufacturing Company, on New Church Street in this city, close to the lowest station of the Metropolitan Elevated Railroad Company, where trains are continually arriving and departing, and where, consequently, there is not only the rumble of the trains in motion, but the noise of escaping steam from the locomotives, and of the compressed air from the air brakes is heard almost continuously, in addition to the noise of the carts on the street.

Int. 41. What do you think *is* the use of the chamber in front of the diaphragm in the Bell patent of 1877, and also in the defendant's telephones?

Ans. The chamber itself, so far as my experiments inform me, or my judgment, is of no practical value for the purpose of confining the sound. The plate which forms the chamber serves as a holder for the end of the tube, and for this purpose might be replaced by any kind of a skeleton device, such as an arm, bridge or spider, which would hold the tube in place. The said plate also acts as a cover to keep out dust; and when used for this purpose it should not bear upon the diaphragm, so that a slight chamber or space between the cover, when used, and the front of the diaphragm is required to prevent the contact of the cover with the diaphragm.

Int. 42. Have you made any experimental use of any of the common receivers, testified as used by Mr. Gray in 1874 or 1875, showing whether, either for the purpose of talking or of listening, the diaphragm by itself, without either chamber or speaking tube, is satisfactory and sufficient?

Ans. In conjunction with Mr. William M. Goodridge, I made a number of experiments with the following common receivers, testified as used by Mr. Gray at the date mentioned, namely, defendant's Exhibit Gray's Resonant Box Magnet Receiver, defendant's Exhibit Diaphragm Box Magnet Receiver, defendant's Exhibit Gray's Concave Metallic Diaphragm Magnet Receiver, each of the said exhibits being used to receive musical tones from vibrating reed transmitters, and to receive articulate speech in connection with an Edison carbon transmitter at the transmitting end of the line. In all of the said experiments the exhibits were used for the purpose of listening or as receivers; and in some of the experiments, plain discs of sheet metal were employed in connection with the magnet, such discs being similar to the solid head of the tin box of defendant's Exhibit Gray's Resonant Box Magnet Receiver, without either the cylindrical wall or the perforated cover of the box. The experiments showed me that the plain disc by itself, without either chamber or speaking tube, is, when used in connection with an electro-magnet, satisfactory and sufficient to enable either musical tones of different pitches or speech to be made distinctly audible to the listener.

3015

Int. 43. Referring now to the eighth claim of the Bell patent of 1877, namely, "In a system of electric telephony, the combination of a permanent magnet with a plate of iron or steel or other material capable of inductive action, with coils upon the end or ends of said magnet nearest the plate, substantially as set forth," can you refer to any publication in evidence in this case, of a prior date to Bell, in which magnets wound in this manner are employed for telegraphic purposes with the same operation as compared with magnets otherwise wound that they have in the Bell apparatus? If so, please refer to such prior publication, and explain what you find there.

Ans. I find a description of the same kind of magnet in the work entitled "Der Elektro-magnetische Telegraph," by Dr. H. Schellen, 1867. The description is found on pages 539 to 542, inclusive, and is represented in the drawing, Fig. 354, page 539, and Figs. 355 and 356, page 540. In this case the permanent horseshoe magnet, corresponding with that (O) of Fig. 5 of the Bell patent, is fully represented at Fig. 356; while fragments of it, marked respectively N, S, are represented in Figs. 354 and 355. The pole pieces are seen most fully in Fig. 356, being the pieces of iron surrounded by spools of insulated wire, designated E E. The ends of these pole pieces and the spools or helices of insulated wire are also represented in Figs. 354 and 355, where the helices or spools are designated E. This compound magnet is represented as used in connection with a vibrating armature, designated H, and is described as a part of the Hughes printing telegraph. If there be any advantage by reason of the greater quickness of action or greater strength of such a magnet as compared with a permanent magnet having its legs entirely covered with the helices of wire, such advantage is gained equally by the use of the said compound magnet in the Hughes telegraph and in the Bell telephone described in the second patent.

Int. 44. Have you examined a copy of the caveat filed by Mr. Gray, February 14, 1876? If so, will you state whether or not, in your opinion, it describes and represents a practical apparatus for the telephonic transmission of articulate speech? And particularly state whether or not you agree with Mr. H. B. Renwick where he says, on page 37 of the record, that he should think the apparatus would not transmit articulate speech because of the shape of the re-

ceiving vocalizing chamber; adding, "I think that the various reflections of the sound waves in that cavity would tend to impair or destroy the articulation before it got to the ears of the listener."

Ans. I have examined the printed copy of the caveat of Mr. Gray, referred to in the question. I have never had an opportunity to test the operation of a transmitting instrument such as that described in that caveat; but from the statement of Professor Bell, in reference to the use of such instrument in Philadelphia, as published in his lecture, reported in the Journal of the Society of Telegraphic Engineers, Vol. VI, 1877, No. 20, I am of opinion that it is capable of transmitting articulate speech, and I know by actual trial that a receiving instrument constructed like that represented in the said caveat, with, of course, such adjuncts as are necessary to hold the electro-magnet and vocalizing chamber or resonator, with its diaphragm and piece of soft iron, in their proper relative positions, will receive and render audible articulate speech. I do not agree with the opinion of Mr. H. B. Renwick quoted in the question, for the reason that I know that the vocalizing chamber described in the said caveat is substantially the same in form as some ear trumpets employed by deaf people, as an illustration of which I may refer to the work entitled "Elementary Treatise on Natural Philosophy," by A. Privat Deschanel, Part IV, Sound and Light, 1874, page 809, Fig. 582, small figures 2 and 4. I also know that the said vocalizing chamber of the caveat is similar in form to the resonators of Helmholtz, one of which is represented on page 856 of the same work. The knowledge of these ear trumpets and resonators would have led me to infer that a cavity of globular form would not tend to impair or destroy the articulation before it got to the ear of the listener; and the trial of a receiving instrument, constructed like that represented in the caveat, satisfies me, as a matter of fact, that the globular form of cavity or vocalizing chamber, does not impair or destroy the articulation.

Cross Examination by CHAUNCEY SMITH, Esq., *of Counsel for Complainants.*

Cross-Int. 45. When did you first have any knowledge of the speaking telephone, and to what extent have you used such instruments since you first had knowledge of them?

3017

Ans. The first knowledge I had was through printed descriptions. I have no means of fixing the date of the first knowledge through this means, but it must have been in the year 1877, as I recollect in the summer of that year having tested the operation of a pair of speaking telephones, and the knowledge through publications was of an earlier date. Between that summer and the present time I used speaking telephones, but rarely until last February preceding my direct examination. Since then I have made a number of experiments with speaking telephones.

Cross-Int. 46. Do you remember whether the first printed accounts of them which you read spoke of them as a new invention, and did it attribute the invention of them to anybody?

Ans. My recollection of the first printed descriptions which I saw is very vague and imperfect, but my impression is that they spoke of the telephone as a new invention, and attributed it to Professor Bell.

Cross-Int. 47. Do you remember what kind of instruments they were which you first saw, and do you know by whom they were manufactured?

Ans. I recollect that the first instruments which I saw were similar to that represented at Fig. 55, page 78 of Prescott's work on the Electric Telephone. I do not know by whom they were manufactured, nor do I recollect noticing any stamp or name upon them by which I could have got the name of the manufacturer.

Cross-Int. 48. Is not the form of instrument there represented one which is given by Professor Bell to illustrate one form of his invention, in an address or lecture delivered by him on some occasion?

Ans. I am not certain whether it is or is not. He describes it as one invented by the Providence experimenters; and on a preceding page he also describes a transmitting instrument which I understand to have been the invention of Mr. Gray, in terms which made it doubtful to me whether he did or did not intend it to be understood that it was one form in which his (Bell's) invention might be carried into effect. So that I am in doubt whether the telephonic instruments described in that lecture are all intended to be understood as forms of the Bell invention or not.

Cross-Int. 49. You have not any doubt that this representation of this telephone is contained in a report of a lecture delivered by Mr. Bell?

Ans. I presume that reference is had in the question to the form represented at Fig. 29, which is the same as that referred to by me as Fig. 55 in Prescott's work; and I have no doubt that this is represented in a report of a lecture delivered by Mr. Bell.

Cross-Int. 50. I suppose you do not intend to do Professor Bell injustice, and to represent him as stating that that form of instrument was not invented by himself or was first invented by the people of Providence. Will you please look at the account given by Professor Bell of that form of instrument, and state whether you understand him to disclaim the invention of it himself, or only that it was invented both by himself and the Providence people?

Ans. I do not understand Professor Bell to state that the form of instrument was not invented by himself, nor does he state whether it was first invented by himself or first invented by the Providence experimenters. I think the whole language conveys the idea that it was constructed by both, independently of each other, without saying which first produced it. He does, however, distinctly state that one part of the device was invented solely by his friend, Professor Peirce, and therefore not by himself, the language being as follows: "The convenient form of mouth piece shown in Fig. 29, now adopted by me, was invented solely by my friend, Professor Peirce."

Cross-Int. 51. Do you not find a distinct statement by Professor Bell that he constructed an instrument of the form represented in the drawing before he had any knowledge of such an instrument being invented or constructed by the Providence people?

Ans. I do not think the language states that distinctly, but I think that inference may be put upon it.

Cross-Int. 52. You say, in your answer to the forty-eighth question, that Mr. Bell describes a transmitting instrument which you understand to be the invention of Mr. Gray. Did you mean to convey the impression that Mr. Bell described it as the invention of Mr. Gray?

Ans. Certainly not.

Cross-Int. 53. Will you refer to Mr. Bell's patent, of 1876, and

3019

state whether you find a description in it of a transmitting instrument of the kind which you say you understood to be invented by Mr. Gray?

Ans. I do not.

[*Adjourned to Tuesday, April 29, at 10 A. M.*]

NEW YORK, April 29, 1879, 10 A. M.

Cross-Int. 54. In your answer to the eighteenth direct interrogatory you produced certain instruments in evidence, marked "Bell apparatus of 1876 patent transmitter, and Bell apparatus 1876 patent receiver," with which you had made, as I understand it, some experiments or trials. Were these instruments made under your direction and in accordance with your instructions?

Ans. The instruments were not made under my direction nor in accordance with instructions from me, except in the respect of the slides and screw for adjusting the relative positions of the parts, which I requested to have put on after the first trials, but without describing or giving instructions as to any precise form in which such adjustment should be made, and with the exception of two suggestions which I made in reference to the apparatus, namely, that vibrating armatures of several thicknesses should be made; and that means should be provided of hanging these armatures in such manner that they were not in continuous magnet connection with the electro magnets, so that an opportunity might be given of testing the instruments either with the vibrating armatures in magnetic connection with the electro-magnets or without such connection. I believe, but am not certain, that I made a suggestion that the apparatus would be more likely to work practically if the armatures hung more nearly vertically than they are represented in the drawings, because I notice that the armatures in the other figures of the drawings were placed with their surfaces about parallel with the surfaces of the ends of the cores of the magnets, and because when so placed and standing vertically the weights of the armatures would hamper their vibrations by the membranes to a less extent.

Cross-Int. 55. Are the instruments now just what you would have had made if you had given instructions for making what is described and represented in the patent?

Ans. I do not know whether they are or not, because I do not know whether I should or should not have directed the details of construction to be made in the precise manner found in those instruments. The instruments, however, are substantially such as I should have made if I had given instructions myself to make what is described and represented in the patent as nearly as the meagre drawing and description, and the absence of any scale or directions as to size, is considered.

Cross-Int. 56. Is the size of the instruments that which, in your judgment, would give the best results?

Ans. I have had no opportunity of laying the basis for judgment on the subject of the best dimensions by previously either seeing the operations of instruments of different sizes, or having seen the record of trials made with instruments of different dimensions, but I should say that, assuming the coils of wire *b* and *f*, in Fig. 7, to be of the dimensions which are found in telegraphic instruments in practical use, the proportions of the instruments are of about what I should consider the best, from such information as I could derive from the Bell patent, because I have noticed that the spools of wire on the two instruments correspond with those which I have seen in use on other telegraphic instruments. No information whatever, either by drawing or description, is given in the said Bell patent as to the widths of the armatures represented in the drawing, or to be employed in practice, the only information that the drawings afford on the subject being that the armatures are of uniform size from their points to their hinges. The armatures of the two instruments are made of about the same widths as the diameters of the cores of the electro-magnets; and if I had directed them to be made myself, I have no doubt I should have given directions to have had them made of about that width.

Cross-Int. 57. When you speak of telegraphic instruments in practical use, did you refer to speaking telephones in practical use, or to instruments which are to be put into operation by the human voice, or by means of a musical instrument? Or do you refer to the ordinary telegraphic instruments used for transmitting messages according to the Morse system?

Ans. I referred to the ordinary telegraphic instruments for trans-

3-21

mitting and receiving messages according to the Morse system, and to other instruments for recording telegraphic messages which I have seen.

Cross-Int. 58. If, instead of assuming the coils of wire to be of the dimensions which are found in telegraphic instruments, you had assumed that they should be of the dimensions found in speaking telephones in practical use, how would instruments constructed of like proportions in all their parts correspond in size with the exhibits you have produced?

Ans. There were not, to my knowledge, any speaking telephones prior to the date of the Bell patent, so that I had no dimensions of the coils of wire of such prior telephones to form any opinion upon. As to speaking telephones constructed since that date, I have noticed that the coils of wire are of about the same diameters as those upon the two apparatuses, but of greatly less length in the direction of the length of the leg of the magnet. Hence, if I had taken the diameters of the coils as a standard, I should have made the instruments of about the dimensions they now are, in all respects, except the lengths of the coils along the legs of the magnets. On the other hand, if I had taken the lengths of the coils as a standard, I should have had to reduce the instruments excessively in dimensions, say down to one sixth or one eighth of the present sizes; and I should, in such cases, have had to have greatly reduced the quantities of wire in the coils, so as to keep the lengths and diameters of the coils of the relative proportions represented in the drawing of the Bell patent.

Cross-Int. 59. In what speaking telephones in practical use have you found the coils of the diameters stated in your last answer?

Ans. The ones which I had in my mind were Bell telephones, which I understand were made or put in use by the Bell Telephone Company, in which the coils of wire are about an inch in diameter, and about three eighths of an inch long, measured in the direction of the length of the cores within them.

Cross-Int. 60. If you had assumed that the coils of wire should be of the same dimensions as those in the first telephones you ever saw, or of the dimensions of those in the infringing instruments of the defendant put in evidence, how would instruments constructed

of dimensions proportional to the size of such coils have corresponded with the instruments you produced?

Ans. I have no recollection of the dimensions of the coils of the first instruments which I saw in use, as I do not recollect either opening them myself or having seen them opened. As to the other instruments referred to in the question, if I had taken the lengths of the coils of them as the standard, I should have reduced the linear dimensions down to about one sixth of their present dimensions, which would have made diaphragms less than half an inch in diameter. If I had taken the diameters of the coils as the standard, I should have made the instruments about one quarter smaller lineally than they now are.

Cross-Int. 61. When did you first see the instruments which you have produced in evidence, and when did you make your trials of them?

Ans. The instruments in their present condition with the slide adjustments were first seen by me on February 27th last, that being the day when those adjustments were completed. I had seen the instruments without the slide adjustments, certainly one day, and I believe two or three, before that date. The trials were made by me in the last week of last February. [1879.]

Cross-Int. 62. How much time in all did you spend in these trials?

Ans. I spent a large portion, I think about half of the first day, on trials with the instruments before the screw and slide adjustments were applied to them, and afterwards I spent two days in trying to make the instruments work satisfactorily, one day in each locality in which they were tested.

Cross-Int. 63. Of what material were the diaphragms made upon those instruments when you tried them; and were the diaphragms which you used the same as those that are now in the instruments?

Ans. The diaphragms were made of animal membrane, the particular quality of animal membrane being that commonly known as fine parchment. Those now in the instruments are the same which were in the instruments during my trials of them, but at that time they were strained taut, except so far as the membrane of the transmit-

3023

ting instrument became affected by use. The membranes, in their present condition, have evidently been affected by the weather since the trials, as they are now in a slack or unstrained condition.

Cross-Int. 64. How was the straining of the membranes effected?

Ans. The straining of the membranes was effected (I presume, from the construction of the instrument) by drawing the membrane radially, in all directions, from the centre, and clamping it fast by tightening the clamp screws which hold the clamp rings together. I say I presume it was done in that way, from the construction, because I did not see the work done with my own eyes.

Cross-Int. 65. Do you know whether the straining of the membrane, before clamping, was done when it was in a wet condition or in a dry condition?

Ans. I do not.

Cross-Int. 66. Except as the tension of the membrane was affected by the different strength of the magnet acting upon the armature, did you, during the course of your trials, vary the tension of the membrane to see how would that effect the results?

Ans. There was no attempt made, during the course of the trials, to vary the tension of the membranes, except so far as the tension of the membrane of the transmitting instrument was affected by adjusting the cone to which it is attached slightly further from the magnet as the membrane became slightly softened in use by the action of the breath of the speaker.

Cross-Int. 67. You have spoken repeatedly, during your examination, of the armature of instruments like those represented in Fig. 7 of the patent of 1876, to which, as I understand you, these instruments are intended to correspond, as having a definite pitch of its own or a definite rate of vibration, as I understand you. Does this definite pitch or rate of vibration belong to the armature itself, so as to be imposed upon the diaphragm of the transmitting instrument, or does it belong to the diaphragm?

Ans. I cannot state positively whether the definite pitch belongs to one or the other alone; but I have an opinion on the subject, derived from my observations, which I will give, if desired.

Cross-Int. 68. Will you give the observations which you refer to, and then state the opinion which you formed from them?

Ans. The observations were that, with the same armatures, no matter whether one person or another spoke at the transmitting instrument, whether the speaker spoke in one tone or another, and whether yells or language were uttered in the transmitting instrument, the tone at the receiving instrument appeared to be the same, with the exception of slight variations in loudness, depending upon the greater or less force with which the person spoke at the transmitting instrument. On the other hand, a change of the armatures appeared to vary the tone. The opinion that I formed was that the armatures were the main controllers of the vibrations, and that the attachment of the stretched membranes to them modified, to some extent, the vibrations from what they would have been if there had been no such attachment, the action of the diaphragm being analogous to the addition of a weight to the vibrating armature.

Cross-Int. 69. When you speak of tones in your last answer as appearing to be the same or varying a little, do you refer to the pitch of the tone?

Ans. I mean that the pitch appeared to be the same, and that there was a variation in loudness, so long as the same pair of armatures was used. When the armatures were changed for others of different weights, there was a change in pitch, and the sounds heard were fainter when the lightest and heaviest pairs of armatures were used than they were with those of the medium weight, which are now upon the instruments.

Cross-Int. 70. Did a heavier armature give a higher or a lower pitch?

Ans. When the pair of heavier armatures were used, the pitch appeared to be lower, although the sound was fainter.

Cross-Int. 71. Did you ascertain what the pitch of the instrument you have produced in evidence was, as expressed in musical notation, with the medium armature which you used?

Ans. I did not.

Cross-Int 72. Did you make any effort in speaking to have the pitch of the voice correspond with the pitch of the instrument?

Ans. So far as intentional correspondence is concerned, there

3025

was none; what took place was that the person at the transmitter commenced speaking, and at first no sounds were heard to proceed from the receiver. He was then told to speak louder, and to yell, in doing which he naturally raised his voice progressively higher, until a point was reached when sounds became audible at the receiving instrument. After having got up to that point, the person at the transmitter continued to speak in that manner.

Cross-Int. 73. When you say he naturally raised his voice progressively, do you mean raised the pitch of his voice?

Ans. I do; but of course the voice was also louder or more forcible.

Cross-Int. 74. Do you know whether the pitch of the voice was then the same as the normal pitch of the instrument, or was an octave higher or lower, or had any definite musical relation to the pitch of the instrument?

Ans. I do not. As I have stated before, I did not measure the pitch of the instrument, and no attempt was made to measure the pitch of the voice of the speakers.

Cross-Int. 75. You say after having got up to that point, that is, the point where the sounds became audible, the person at the transmitter continued to speak in that manner. Do you mean in the same pitch?

Ans. I do not mean necessarily in one identical pitch, because as different words were spoken, and sometimes yells without words, I presume there must have been some variation from one particular pitch. What I meant was that the person continued to speak in the high, forcible manner in which he spoke when it was found that sounds were heard at the receiving instrument.

Cross-Int. 76. Did you reach that point before you came to what you have called yells; and were these yells made in the same pitch?

Ans. My recollection is, that after I found in the first trials that no sound could be heard at the receiving instrument, I requested the speaker to yell loudly so that I could test whether I could hear him, and after I found that I could, I requested him to count loudly and slowly so that I could ascertain whether I could distinguish his articulation. I cannot state whether the yells were or were not in the same pitch as the words spoken; all I can say is that both were

3026

uttered in a high-pitched, forcible manner, — certainly much higher in pitch than the pitch of ordinary talking by the same person.

Cross-Int. 77. Do you understand that for the purposes of articulation a very loud tone is better than one of more moderate loudness?

Ans. I do not know that there is any material difference so far as the distinctness of the articulation is concerned; but there is a material difference so far as the distance to which the articulation can be heard is concerned, and so far as the ease with which persons of different acuteness of hearing can distinguish it is concerned.

Cross-Int. 78. I wish to read to you a passage from an article published in the American Journal of Sciences and Arts, Vol. XVI., July, 1878, headed, "A Method of recording Articulate Vibrations by Means of Photography. By E. W. Blake, Jun., Hazard Professor of Physics, Brown University": —

"The extreme minuteness of the vibrations of the iron disc of the Bell telephone withdraws them from all ordinary methods of observation and measurement. A pointed wire fastened to the centre of a ferrotyped disc $2\frac{3}{4}$ inches in diameter, and moving on smoked glass, gave $\frac{1}{50}$ inches as the extreme amplitude of vibration under a powerful impulse of the voice, while sounds moderated to such point as to be fairly articulate, were with difficulty detected by the movement which they communicated."

Should you judge from this that sounds uttered without a powerful impulse of the voice were less fairly articulate than the same sounds uttered with a moderate impulse of the voice?

[*If the passage is read as evidence to the Court, of the truth of the statement of facts which it contains, it is objected to.*]

Ans. I should judge from the statement that the sounds which the writer referred to as made under a powerful impulse of the voice were less fairly articulate than the moderated sounds referred to by him; but I cannot tell from the statement whether or not any attempt was made to produce articulation under the powerful impulse of the voice referred to; the language appearing, if anything, to convey the idea to me (as respects articulation) that the sound made under the powerful impulse of the voice was not an articulate sound, by which I mean one expressing language.

3024

Cross-Int. 79. Do you understand that when a stretched membrane is acted upon by sounds or sound waves which put it into vibration, the rate of those vibrations will correspond with the pitch of the sound which acts upon it, or that it will be determined by the character of the membrane itself, and be irrespective of the pitch of the sounds acting upon the membrane, so that it will take the same rate of vibration whatever may be the pitch of the sounds?

Ans. I understand that what would take place would depend upon circumstances which are not mentioned in the question. If, for example, the stretched membrane has not its freedom controlled by connection with any other device, then I understand that its rate of vibrations will correspond more or less closely, possibly exactly, with the pitch of the sound which acts upon it. If, on the other hand, the freedom of the stretched membrane be circumscribed by attachment to some other article, then I understand that although it may tend to vibrate correspondingly with the waves of sound, yet its rate of vibration will be controlled more or less by the attachment to the article, unless the article should be under such conditions that it was influenced only by its own weight and its connection with the stretched membrane; in which case it is possible that the rate of vibration of the membrane would not be materially affected.

Cross-Int. 80. Will you state whether or not you understand that a stretched membrane may be put into such a condition, either by weight or by a force applied in some other way which still leaves it the ability to move, that it will have a fixed rate of vibration into which it may be thrown by sounds of different pitches or by sound waves of different rates per second, and, if so, will you state what such conditions are?

Ans. I understand that a stretched membrane may be put into such a condition that although it is permitted to move it will move with a rate which is practically about the same. But I am not prepared to say that it can or cannot be thrown into that rate of vibration by sounds which differ from each other materially in pitch or by sound waves differing materially in their rates per second. I say I am not prepared to make either statement, because I do not know what the facts would be.

Cross-Int. 81. I have understood you to say that the membrane

and the armature attached to it, in instruments constructed like what is represented in Fig. 7, of Bell's patent of 1876, will have a rate of vibration peculiar to itself which it will take under the influence of sounds of different pitches instead of taking the rate of vibration of the sounds or sound waves themselves. Will you state whether or not I have understood you correctly? If I have not understood you correctly, will you state what you meant in your answer to the twenty-eighth direct interrogatory when explaining the method referred to in the fifth claim of the patent, by a vibrating armature which produces a musical note of a certain definite pitch; and what you meant by a definite pitch in other places, where you have spoken of it in connection with what was referred to in said fifth claim?

Ans. I recollect having given it as my opinion in substance that the combined membrane and armature of Fig. 7, of Bell's patent, will have a rate of vibration peculiar to itself, which it will take under the influence of sound, but I do not recollect stating that sounds of materially different pitches would cause it to vibrate. When I used the expression, a certain definite pitch, in my answer to question twenty-eight, I intended to use it in the same manner in which I understand it to be used in the Bell patent, in the following sentence: "The armature *c* can be set in vibration in a variety of ways, one of which is by wind, and in vibrating, it produces a musical note of a certain definite pitch." That is to say, I understand that if the armature vibrate at all by the action of sound, it vibrates at practically the same pitch, but with greater or less loudness, according to the amplitude of the vibrations. I cannot state from recollection whether I have or have not used the same expression to express a different idea, and it would be necessary for me to read over all my examination to ascertain this fact, but I have intended to employ the expression to express that idea.

Cross-Int. 82. Is the passage which you quote from Mr. Bell's patent found in connection with the description of the instruments represented in Fig. 7, where an armature loosely fastened at one end is connected at the other end with a stretched membrane, or in connection with the description of the instrument shown in Figure 5, where the armature is firmly clamped to one pole of the magnet, while

its other end is not connected with anything, but is left free to vibrate over the end of the opposite pole?

Ans. The part of the specification in which the sentence occurs is that describing the apparatus represented at Fig. 5, but the connection of the language of the specification is such that I understand that statement to apply to all of the figures.

Cross-Int. 83. Do you find in the description in Mr. Bell's patent, of the apparatus represented in Fig. 7, any statement that the armature connected to the membrane will have a certain definite pitch?

Ans. I do not find a statement in the precise words given in the question, but I do find a statement which, taken in connection with language preceding it, conveys to me that idea.

Cross-Int. 84. Is it your belief that an instrument constructed in accordance with Fig. 7, of Mr. Bell's patent, and the specific description relating thereto, will have a certain definite pitch? If so, will you state whether it is your belief that it will be put into a rate of vibration corresponding to that pitch by sounds of any kind, or that it will be put into vibration only by sounds of corresponding pitch, or of a nearly corresponding pitch?

Ans. As I stated before, the description and drawing of the instrument represented by Fig. 7 is very indefinite from a want of any statement as to the sizes of the parts, or any scale by which they may be measured, and from the want of any drawing showing the width o the steel armature. Hence a great variety of instruments might be constructed in accordance with Fig. 7 of Bell's patent, and the specification relating thereto, as far as these afford information; and yet, for all I know to the contrary, they might not necessarily all operate in the same manner. I believe, from the trials which I have made, that *an* instrument constructed in accordance with Fig. 7 of Mr. Bell's patent, and the specification relating thereto, will have, practically, a certain definite pitch. But whether or not every instrument which could be constructed in accordance with them will have a certain definite pitch I am not prepared to state. Neither am I prepared to state whether the instrument can or cannot be put into vibration only by sounds of corresponding pitch, or of a nearly corresponding pitch. But from the experiments which I have made, I

am disposed to believe that a sound of corresponding, or nearly corresponding, pitch is required to put it into its normal rate of vibration.

Cross-Int. 85. You refer to your experiments with reference to your belief that the armature of an instrument constructed according to Fig. 7 of Bell's patent and the description thereof may have a definite rate of vibration; and you say that from your experiments you are disposed to believe that a sound of corresponding or nearly corresponding pitch is required to put it into its normal rate of vibration. What do your experiments show you, or what conclusion have you formed as to how nearly the sounds must correspond in pitch in order to give the armature its normal rate of vibration?

Ans. I noticed the fact, as before stated by me, that we did not get any sound at the receiving end until the voice of the speaker at the transmitting end was raised to a tone that was materially higher than that of his voice when speaking in his ordinary tone. And I also noticed the fact that when I attempted to transmit words and sounds myself, the person at the receiving end did not hear sounds unless I spoke in a high tone of voice. These facts showed me that a high tone of voice was required; and I noticed the fact that when I spoke myself, and sound was heard at the receiving end, the tone of my voice varied but little, if any. As to how nearly the sounds must correspond in pitch to give the armature its normal rate of vibration, I am not prepared to give any information, as it never occurred to me to attempt to measure the pitch, and I had no means of doing so.

Cross-Int. 86. Is it not a well-understood fact that an instrument like a tuning fork or strained strings or wire may be put into vibration so as to give out its normal tone by sounding in its neighborhood, for some time, a note of the pitch to which the instrument is tuned?

Ans. I understand that it is.

Cross-Int. 87. And conversely, if you desire to construct an instrument of the kind referred to, to be put into vibration by sounds of any particular pitch, is it not well understood that the instrument must be tuned to that pitch?

Ans. I understand that that is the general law in reference to

3034

instruments, the sounding portions of which are left free to vibrate according to their normal law.

Cross-Int. 88. If it be true, as you believe, that instruments made in accordance with Fig. 7 of Bell's patent, and the description thereof, may have a certain definite pitch which would require sounds of a corresponding, or nearly corresponding, pitch to put them in action, would it or would it not, in your judgment, be a fairer test of what can be done with such instruments in transmitting articulate speech, to construct them so as to correspond, or nearly correspond, in pitch with the natural pitch of the voice of the person who is to use it, rather than with a pitch much higher than the natural pitch of the voice?

Ans. I do not think that it would have been a fairer test to construct the instrument as stated in the question, provided the pitch of the instrument, as constructed, was not higher than the pitch at which the person who was to utter a sound at the transmitter could articulate his words distinctly. Of course, if the instrument should be constructed to vibrate at so high a pitch that the person at the transmitting instrument could not articulate distinctly at that pitch, such a construction would not afford a fair test of the powers of the instrument, with such a speaker.

Cross-Int. 89. Do you know whether the several armatures of the instruments which you have tried and produced in evidence were made of soft iron or of steel? And if of steel, whether of tempered steel?

Ans. I understood that they were made of steel, but I was not informed whether they were or were not tempered after they were made.

Cross-Int. 90. In the twenty-eighth interrogatory you were asked to state what you understand to be the method referred to in the said fifth claim, and in your answer you say, the method of accomplishing the object is to impart motion by the human voice, or by means of a musical instrument to a vibrating armature which produced a musical note of a certain definite pitch. Will you refer to the fifth claim, and see if it states in terms what the method is for transmitting vocal or other sounds telegraphically?

Ans. There is an indefinite statement in terms in the claim, pre-

ceded and followed by a reference to the specification, so that when the indefinite terms are explained by the reference to the specification, the statement, as a whole, becomes definite. The language to which I refer is as follows: "as herein described, by causing electrical undulations, similar in form to the vibrations of the air accompanying the said vocal or other sounds, substantially as set forth."

Cross-Int. 91. Do you understand that the language of the claim which you have quoted as describing the method should be of itself properly understood as describing the same method which you specified in the language that I quoted from your twenty-eighth answer?

Ans. The language that you quoted, as I understand it, does not describe the whole method, but only a part of it, and therefore I understand that the language of the claim is to be understood as describing the whole method mentioned by me in my whole answer to the twenty-eighth interrogatory, and not as properly described by the fragment which is quoted in the preceding question.

[*Adjourned to Wednesday, April* 30, *at* 10.30 *A. M.*]

NEW YORK, April 30, 1879, 10.30 A. M.

Cross-Int. 92. Is your statement in the twenty-eighth answer, of the method referred to in the fifth claim, to be understood as embracing the fact stated in the language of the claim, which you quoted in answer to the ninetieth cross-interrogatory?

Ans. I understand that it does embrace what is stated in the language quoted by me, with the meaning which that language conveys when taken in connection with the specification preceding it, to which reference is made.

Cross-Int. 93. Will you state what you understand the language quoted by you from the fifth claim to mean, when taken by itself; and if you think it is to have any different meaning when taken in connection with the language of the specification, will you state what that different meaning is, and quote the language from the specification which you think gives it such different meaning?

Ans. The language quoted by me contains two references to the preceding description, namely, the words, "as herein described," and the words, "substantially as set forth." So long as these words

AMERICAN BELL TELEPHONE COMPANY, -14

3033

form part of the quotation, it is impracticable for me to form an idea of what the quotation means when taken by itself. In order to get the meaning of the words, it seems to me absolutely necessary to follow the directions given by the above-mentioned two sets of words quoted in the first part of this answer. If desired, I will quote or refer to the parts of the specification which I understand to be referred to. On the other hand, if the question is intended to ask me what I understand to be the meaning of the portion of the quotation made in my answer to Cross-Int. 90, which intervenes between the two sets of words quoted in the first part of my present answer, when detached from the claim, I will endeavor to state it.

Cross-Int. 94. What I wish is, that you shall state what you understand to be the meaning of the words in the claim, "by causing electrical undulations, similar in form to the vibrations of the air accompanying the said vocal or other sounds," when taken without referring to the specification; and if they have in your mind a different meaning when taken with reference to what was contained in the specification, and referred to in the claim, state what that different meaning is; and quote the language of the specification which you understand gives that different meaning.

Ans. As I understand the question, the words are first to be considered abstractly, without reference to the residue of the claim, and without reference to any part of the specification preceding the claim. When so considered, they convey to my mind the idea of producing or causing, in any and every manner that the ingenuity of man ever has devised or will ever hereafter devise, electrical undulations or waves for any and every purpose which the ingenuity of man can imagine in any and every object in which they can be produced, similar in form to the vibrations of the air, or sound waves, accompanying vocal or other sounds. The word said, according to the conditions of the question as I understand them, must have no meaning given to it under this first consideration, because, inasmuch as the words are to be considered without reference to anything, no vocal or other sounds are said or mentioned to which that word of the said language, considered abstractly, can possibly refer.

When the words mentioned in the question are taken in connection

with the residue of the claim and the specification, they convey a much more restricted meaning, to my mind, and confine the object or purpose to which they apply, and the mode and extent in and to which the electrical undulations mentioned are produced or caused, and are used. The purpose and extent are stated in the preceding words of the claim, namely, "For transmitting vocal or other sounds telegraphically as herein described." As I understand these words, they do not include every kind of transmission, but apply to the kind of telegraphic transmission mentioned in the preceding part of the specification, which, as I understand it, includes not only the operations effected at the transmitting end of a telegraphic system, but also the operations at the receiving end. The language of the specification which gives this meaning to the words, transmitting telegraphically, is the first paragraph of the preamble, commencing as follows: "In Letters Patent, granted to me April 6, 1875, No. 161,739, I have described a method of, and apparatus for, transmitting two or more telegraphic signals simultaneously along a single wire, by the employment of transmitting instruments, each of which occasions a succession of electrical impulses differing in rate from the others; and of receiving instruments, each tuned to a pitch at which it will be put in vibration to produce its fundamental note by one only of the transmitting instruments; and of vibratory circuit breakers operating to convert the vibratory movement of the receiving instrument into a permanent make or break (as the case may be) of a local circuit, in which is placed a Morse sounder, register, or other telegraphic apparatus." This quotation conveys to my mind that the purpose and extent for and to which the electrical undulations mentioned in the claim are to be employed, according to the method recited, is for the sending and the reception of vocal or other sounds referred to after the word transmitting in the claim; and that their purpose is not restricted only to the sending of such vocal or other sounds; and that the purpose and extent are not so broad as to include any and every purpose which the ingenuity of man can imagine. The next clause of the specification which bears upon this matter is the following: "My present invention consists in the employment of a vibratory or undulatory current of electricity, in contradistinction to a mere intermittent or pulsatory current, and of a

3035

3

method of and apparatus for producing electrical undulations upon the line wire." This paragraph of the specification, taken in connection with the description following it, informs me what is meant by electrical undulations as mentioned in the claim; and when taken in connection with the paragraph previously quoted by me, amounts to a statement that whereas the patentee in his previous patent had shown a method and apparatus of transmitting telegraphically musical signals through the intervention of transmitting and receiving instruments tuned to certain pitches, and by the operation of circuit breakers (which produced what he called an intermittent or pulsatory current), his present invention consists of a method and apparatus for producing telegraphic signals without the use of circuit breakers. A large portion of the specification following the paragraph last quoted by me now becomes important, as defining the meaning of electrical undulations, namely, the whole from the paragraph last quoted by me to the claims. According to the terms of the present question, I should be compelled to read this to the examiner, and have it included in my answer; but as this course would, in my opinion, involve a great loss of time, I request the counsel for complainant to inform me whether or not I am to pursue this course.

[*The counsel for complainant wishes the witness to indicate distinctly and definitely the large portion of the specification following the paragraph last quoted by him; and he consents to his doing this by his mentioning the first and last words of each portion, so that it may be easily known where it commences and where it ends.*]

[*Witness resumes:*] The large portion to which I refer commences with the words, "The distinction between," and ends with the end of the last paragraph of description preceding the claim with the words "as well as iron and steel."

The next words in the language of the claim, the meaning of which has to be understood by reference to the specification are the words "vocal or other sounds." The parts of the specification which I understand to be referred to in reference to these words are the following: "The armature *c* can be set in vibration in a variety of ways, one of which is by wind, and in vibrating it produces a musical note of a certain definite pitch." Also that portion of the specification commencing with the words, "when the instrument A is

placed in voltaic circuit," and ending with the words, "without interfering with one another." Also the following paragraphs: "I desire here to remark that there are many other uses to which these instruments may be put, such as the simultaneous transmission of musical notes, differing in loudness as well as in pitch, and the telegraphic transmission of noises or sounds of any kind."

"When the armature *c*, Fig. 5, is set in vibration, the armature *h* responds not only in pitch but in loudness. Thus when *c* vibrates with a little amplitude, a very soft musical note proceeds from *h*; and when *c* vibrates forcibly, the amplitude of the vibration of *h* is considerably increased, and the resulting sound becomes louder, so if A and B, Fig. 6, are sounded simultaneously (A loudly and B softly), the instruments A^1 and A^2 repeat loudly the signals of A, and B^1 B^2 repeat softly those of B."

"One of the ways in which the armature *c* may be set in vibration has been stated above to be by wind. Another mode is shown in Fig. 7, whereby motion can be imparted to the armature by the human voice or by a musical instrument."

These quotations convey to my mind the meaning that the kinds of vocal or other sounds which are to be telegraphically transmitted are those which correspond with notes of definite pitch, produced by armatures, such as *c*, a single sound or sound of one pitch being telegraphically transmitted, or (as the language of the specification before quoted by me defines transmitting telegraphically) being sent at one end of a line wire, through it to the opposite end, and received and made audible there, by two armatures, which are in unison or have the same pitch; and complex sounds, either musical or noises, consisting of two or more notes or tones of definite pitch, being telegraphically transmitted by as many pairs of instruments having armatures *c* placed upon one telegraphic circuit (as in Fig. 6) as are necessary to respond to the simple tones, of which such complex sounds or noises are made up.

The next matter which is important in reference to the meaning of the words is the consideration of how the electrical undulations are to be caused, because, as I understand the language of the claim, it does not recite that they are to be caused in every manner that the ingenuity of man can conceive, but they are to be caused substan-

3034

tially as set forth in the preceding part of the specification, when vocal sounds as well as others are to be transmitted telegraphically. The parts of the specification which inform me on this subject are the portion commencing with the words, "one of the ways in which the armature *c*, Fig. 5, may be set in vibration," and ending with the words, "to proceed from L." Also the preceding portion, which describes the construction and operation of the armature *c*, either when the instruments containing such armatures are only two in number, or are as many in number as are required to transmit telegraphically, simultaneously or separately different sounds, and thus transmit telegraphically complex sounds, either musical or noises. The portion of the specification to which I refer on this subject of the construction and operation of the armature *c* commences with the words, "In illustration of the method of creating electrical undulations," and ends with the words, "repeat softly those of B."

The meaning which these various quotations give me is that stated in my answer to twenty-eighth interrogatory, which it does not seem to me necessary to repeat a second time.

Cross-Int. 95. Do the words "vocal or other sounds," of themselves, convey to you any meaning?

Ans. When considered without reference to the specification, they convey to me a meaning.

Cross-Int. 96. Will you state what that meaning is?

Ans. When considered without reference to the specification, those words mean to me, every sound that can possibly be produced, either by the voice or any and every other means whatever.

Cross-Int. 97. The language you quoted from the fifth claim speaks of "electrical undulations, similar in form to the vibrations of the air accompanying the said vocal or other sounds." What do you understand to be the similarity here referred to between the electrical undulations and the vibrations of the air?

Ans. There is to be a similarity in duration and amplitude, and in any other respect in which the electrical vibrations and waves of sound or vibrations of the air can be similar, so far as such similarity can be indicated by the form of lines used to represent them.

Cross-Int. 98. How do these electrical undulations, as you under-

stand them, correspond with the movement of the armature which produces them?

Ans. I understand that they correspond in frequency, duration and amplitude.

Cross-Int. 99. I find at the end of the description of the apparatus represented in Fig. 7 of the patent these words: "A similar sound to that uttered into A is then heard to proceed from L." What do you understand by the expression, "a similar sound"?

Ans. I understand it to mean a sound corresponding in quality with that uttered into A, but not necessarily in loudne-s.

Cross-Int. 100. Is it your understanding of the manner in which the apparatus represented in Fig. 7 was to be used according to the specification, that it was to be used to indicate by the durations of the sound the dot or dash of the Morse alphabet?

Ans. That is my understanding of one of the modes in which the apparatus represented in Fig. 7 may be used according to the specification, but not the only mode or purpose.

Cross-Int. 101. Will you point out any language in the specification which specifically refers to this instrument, which indicates to your mind, not merely that it might be so used, but that, according to the specification, it was intended to be so used?

Ans. The language of the specification is "may," but I understand that the word, when so used in the specification, indicates that the inventor intended the apparatus to be so used in case there was occasion for it. The language to which I refer is as follows: —

"The duration of the sound may be used to indicate the dot or dash of the Morse alphabet, and thus a telegraphic despatch may be indicated by alternately interrupting and renewing the sound."

In explanation of my answer, I deem it proper to state that, according to my understanding, this statement applies equally to all of the instruments referred to in the drawings, because each of them contains the armature *c* which produces the sound, and the only differences which are described in the specification, between the construction of the instruments at Fig. 7, and those of the other figures, are that the former contained devices whereby motion can be imparted to the armature by the human voice, or by means of a musical instrument, instead of by wind, as previously mentioned.

3039

Cross-Int. 102. Do you understand that the language which you quoted in your last answer, from the specification, refers specifically to the apparatus shown in Fig. 7?

Ans. I do.

Cross-Int. 103. What specific reference do you find in that passage to the apparatus at Fig. 7.

Ans. The connection in which it is placed shows me that it refers to all the apparatuses containing the armature *c* by which the sound is produced whose duration is referred to, and when the specification is about describing Fig. 7, it uses language which indicates to my mind that the armature which produces the sound in that instrument is the same armature as the armatures of the other instruments; the language to which I refer being the paragraph which commences with the words, "One of the ways," and ends with the words "a musical instrument." Hence I understand that the passage referred to in the question refers as specifically to the instruments of Fig. 7 as it does to the other instruments containing the armature *c*.

Cross-Int. 104. In the specification you find a description referring in terms to the apparatus shown in Fig. 5, do you not?

Ans. I find several.

Cross-Int. 105. In Fig. 5, and in the description referring in terms to it, the armature is represented and described as being a steel spring, one end of which was firmly clamped to one pole or leg of an electro-magnet, while the other end of the spring extends over the opposite pole and is left free to vibrate, is it not?

Ans. The drawing, Fig. 5, represents the armature as connected with the electro-magnet as stated in the question. Portions, also, of the specification describe the armature as connected in that manner with the electro-magnet, but another portion of the specification describes the armature of Fig. 5 as connected in a different manner with the electro-magnet, and a figure of the drawing is given, namely, Fig. 7, to show this other mode of connection.

Cross-Int. 106. Now will you state whether or not there is a separate and distinct description from that referring in terms to Fig. 5, of that which is shown in Fig. 7?

Ans. As I understand the specification, there is not; because the description given of Fig. 7 refers in terms to Fig. 5.

Cross-Int. 107. Does it, to your mind, refer to it in a way which shows that it is a different apparatus?

Ans. According to my mind it refers to it in a way which shows that it is the same apparatus in some respects, and different in others; the differences consisting in the addition of certain parts and in the mode of connecting the armature with the electro-magnet.

Cross-Int. 108. Do you not understand that the apparatus represented in Fig. 7 is described as one which may be put into action by the human voice, or by a musical instrument, the latter not a part of the apparatus itself; and that such sounds will be transmitted from the transmitting instrument to the receiving instrument described?

Ans. I understand that the apparatus represented in Fig. 7 is described as one whereby motion can be imparted to the armature of the transmitting instrument by the human voice, or by means of a musical instrument, the latter not a part of the apparatus itself; and that when a sound is uttered in the cone of the transmitting instrument a similar sound to that so uttered is heard to proceed from the cone of the receiving instrument.

Cross-Int. 109. Do you find anything, in connection with the description of the instrument represented at Fig. 5, having its armature firmly clamped at one end to one pole of the magnet, while the other end, unconnected with anything, extends over the other pole of the magnet and left free to vibrate, can be put into action by the human voice or by a musical instrument not a part of the apparatus, or that a similar sound to that uttered at or into one of the instruments represented in Fig. 5 will be heard to proceed from the other instrument?

Ans. I do not find an express statement in reference to the instrument, when constructed exactly as represented in Fig. 5, that it can be put into action by the human voice or by a musical instrument not a part of the apparatus; but I do find language referring to the instrument when constructed exactly as represented in Fig. 5, which includes every mode by which its armature may be set in vibration; and that when a sound is made thereby, the instrument at the other end responds, which I understand to mean utters a similar sound. The portions of the specification to which I refer are the following: —

3041

"The armature *c* can be set in vibration in a variety of ways, one of which is by wind; and in vibrating, it produces a musical note of a certain definite pitch."

"When the armature of any one of the instruments is set in vibration, all the other instruments upon the circuit which are in unison with it respond * * *."

"When two or more instruments of different pitch are simultaneously caused to vibrate, all the instruments of corresponding pitches upon the circuit are set in vibration, each responding to that one only of the transmitting instruments with which it is in unison."

"I desire here to remark that there are many other uses to which these instruments may be put, such as the simultaneous transmission of musical notes differing in loudness as well as in pitch, and the telegraphic transmission of noises or sounds of any kind."

"When the armature *c*, Fig. 5, is set in vibration, the armature *h* responds not only in pitch but in loudness. Thus when *c* vibrates with little amplitude, a very soft musical note proceeds from *h*; and when *c* vibrates forcibly, the amplitude of the vibration of *h* is considerably increased, and the resulting sound becomes louder."

Cross-Int. 110. Am I to understand that there is not, in your judgment, any substantial difference between an apparatus constructed like that represented at Fig. 5, having steel spring armatures, such as are described in connection with Fig. 5, at one end, firmly clamped to one pole of an electro-magnet, while the other end of the armature, unconnected with anything, extends over the opposite pole of the electro-magnet and is free to vibrate, and an apparatus constructed like that represented at Fig. 7, having the armatures at one end fastened loosely to one pole of the electro-magnets, while the other ends of the armatures are attached to stretched membranes?

Ans. You are to understand that for the purposes set forth in the specification, there is, in my judgment, no substantial difference between the two forms of instruments mentioned up to a certain point; but that after that point is passed, the apparatus represented at Fig. 7 contains devices supplementary or additional to any represented in Fig. 5, whereby, as stated in the patent, motion can be imparted to the armature by the human voice, or by means of a musical instrument, and whereby, as I understand the operation of the

devices, the sound heard to proceed from the receiving instrument is stronger than it would otherwise be.

Cross-Int. 111. My question made no reference to the purposes set forth in the specification. I wished to ascertain if I could, so that I might not misrepresent your views, whether or not there is, in your judgment, *any* substantial difference between the two kinds of apparatus specified in my previous question. Will you please state specifically whether there is or not any substantial difference between them, in your judgment?

Ans. I mentioned the purposes because I do not know how to measure the substantiality of a difference without having reference to the purpose for which the devices compared are to be employed; things which are substantially the same for one purpose being substantially different for another purpose. Thus, a piece of board and a pane of glass when placed in a window sash do not differ substantially for the purpose of keeping out wind, but they differ substantially for the purpose of admitting light. Hence, I do not see how I can ascertain the substantiality of the differences, or whether they are material, without having in view the purposes to be performed. As respects the instruments referred to in the question, I can only repeat in substance what I said before, that in my opinion there is no substantial difference between them up to a certain point for the purposes mentioned in the specification. Beyond that point there is a difference which is substantial in the respect that it is supplementary to anything contained in the other instruments, and that by reason of such additional or supplementary devices a greater amplitude of vibration is imparted to the armature of the transmitting instrument, and a corresponding greater amplitude of vibration is given to the sound waves at the receiving instrument.

Cross-Int. 112. In the fifth interrogatory you were referred to the specification of the Bell patent of 1877, No. 186,787, and asked to state what, if anything, you found therein describing the operation of the apparatus shown and described in the patent of 1876, No. 174,465, and referred to in the fifth claim, and in your answer you quoted a passage which, in terms, as I understand it, refers not only to the patent inquired of, but to another prior patent of Mr. Bell's, and to two applications for patents then pending, and the passage

AMERICAN BELL TELEPHONE COMPANY,

3043

which you quote, as I understand it, does not, in terms, refer to the apparatus referred to in the fifth claim, but rather to things which are common to the patent of 1876, and the other patent and the application referred to. Will you look again to the patent of 1877, and see if you find any other passage or passages than that which you quoted which refers to the patent of 1876, and not to any other patent, and the prior applications? And if so, quote the language.

Ans. Before answering the inquiry made at the latter part of the question, I may say that I do not admit that the passage which I quoted does not, in terms, refer to the apparatus referred to in the fifth claim of patent No. 174,465.

There are two other passages in the patent of 186,787 which refer to the patent of 1876, and not to any other patent, as follows: —

"In my patent, No. 174,465, dated March 7, 1876, I have shown, as one form of transmitting instrument, a stretched membrane to which the armature of an electro-magnet is attached, whereby motion can be imparted to the armature by the human voice, or by means of a musical instrument, or by sounds produced in any way.

"In accordance with my present invention, I substitute for the membrane and armature shown in the transmitting and receiving instruments alluded to above, a plate of iron or steel capable of being thrown into vibration by sounds made in its neighborhood."

"In lieu of the plate A in above figures, iron or steel reeds of definite pitch may be placed in front of the electro-magnet O, and, in connection with a series of such instruments of different pitches, an arrangement upon circuit may be employed similar to that shown in my patent, No. 174,465, and illustrated in Fig. 6 of Sheet 2 in said patent. The battery, of course, may be omitted."

[*Adjourned to Thursday, May* 1, *at* 10 *A. M.*]

NEW YORK, May 1, 1879, 10 A. M.

Cross-Int. 113. In your answer to the twelfth direct interrogatory, in speaking of the instruments represented in Figs. 5 and 6, as I understand you, of the Bell patent of 1876, you use this language:

"And the patent describes in substance that when the instruments are thus placed or connected they are to consist of pairs, the members

3044

of which correspond with each other in pitch, but differ in pitch from the members of the other pairs." Will you point out the passage or passages in the specification which you referred to as describing this in substance?

Ans. The passages to which I referred commence with the words, "The vibratory current passing through the coil of the electro-magnet *f*," and end with the words, "without interfering with one another." The passages thus quoted were those I had in view as bearing upon the operation of the instruments when a number were connected upon one telegraphic circuit.

I was aware at the time I made the statement in my answer to Int. 12, that Fig. 6 and the portion of the specification relating to it represent and describe three instruments of each pitch in unison; but in this case one of the instruments is at a transmitting station and the other two are at two separate receiving stations; so that although there are three instruments in unison, yet the transmitting instrument at the transmitting station and the receiving instrument at either station constitute a pair for transmitting the sound or signal telegraphically from one station to another. Hence I used the term pairs.

Cross-Int. 114. In your answer to the forty-fourth direct interrogatory, in speaking of the apparatus described or represented in Mr. Gray's caveat, to which your attention was called, you say, among other things:

"I know by actual trial that a receiving instrument constructed like that represented in the said caveat, with of course such adjuncts as are necessary to hold the electro-magnet and vocalizing chamber or resonator with its diaphragm and piece of soft iron in their proper relative positions will receive and render audible articulate speech."

Will you state of what materials the instrument or instruments with which you made your trials were made, and what the size of all the parts were, including not only the diameter of the diaphragm, but the length of the vocalizing chamber, its greatest diameter across the body of the instrument, its smallest diameter at the neck of the instrument, and the diameter of the mouth or opening; and describe also the adjuncts which you refer to?

Ans. At the time I saw the instrument, I was not aware that I

3045

should be called upon to describe minutely the details of its construction or its precise dimensions, and therefore I did not carefully note the details nor measure the parts of the instrument. As well as I can recollect, the globular vocalizing chamber was made of copper or some alloy of it; the membrane appeared to be the same as that upon the exhibits of the Bell apparatus, with which I tried the experiments. I noticed that the membrane was taut and must therefore have been stretched, but I did not notice particularly the construction of the devices by which it was secured to the large opening or mouth of the vocalizing chamber; nor did I notice particularly the construction of the connections between the vocalizing chamber and the electro-magnet; but my impression is that the connection was made by small arms or straps of brass, made fast by screws. The greatest diameter of the vocalizing chamber, I should say from recollection, was not less than three inches nor greater than four inches, and the other parts appeared to bear about the same proportions to each other as those represented in the caveat drawing; but as I did not measure them and compare them severally with the representations of the corresponding parts in the caveat drawing, I am not prepared to give definite information on the subject.

Cross-Int. 115. Will you look at Fig. 1 of the drawings in the defendant's Exhibit Gray's Speaking Telephone, Art Application, and state whether that represents correctly, in respect to the adjuncts and the relative sizes of the parts and the form of the vocalizing chamber, the instruments which you tried?

Ans. I cannot say whether it does or does not, as to the details of construction. So far as the vocalizing chamber represented by F in the drawing, the diaphragm with a piece of metal attached to its centre, and the electro-magnet, and the general form of the vocalizing chamber are concerned, I should say that the instrument which I tried corresponded substantially with that represented in the drawing, Fig. 1, referred to in the question. It also corresponded substantially with the said Fig. 1, in the respect that there were adjuncts or connections between the vocalizing chamber and the electro-magnet, to connect the two; but I cannot recollect whether the devices for holding the membrane to the vocalizing chamber, and the adjuncts or connections between the vocalizing chamber and the

electro-magnet, are or are not correctly represented by those of Fig. 1 of the said exhibit, the reason being that I did not pay any particular attention to the details of construction. The matter to which I did give attention was whether I could or could not distinctly hear articulate words when I held the instrument to my ear and talking was done at the transmitting end of the line.

Cross-Int. 116. Did you find that you could, with that instrument, hear words or sounds differing in pitch or in quality?

Ans. I did.

Cross-Int. 117. Is there, in your judgment, any substantial difference between the instruments which have been produced in evidence, marked, "Gray's Concave Metallic Diaphragm Receiver," "Gray's Resonant Box Magnet Receiver," and "Gray's Diaphragm Box Magnet Receiver," by reason of the difference in the size of the diaphragms, or by reason of the fact that in the resonant box magnet receiver the box is placed directly upon the poles of the electro-magnet?

Ans. There was no substantial difference, in my judgment, between the instruments for the purpose of receiving and making audible articulate speech, but there was a slight difference in the loudness of the tones; the tone appearing to be a little louder when the diaphragm was as close as it could be to the core of the magnet without touching it, than it was when the diaphragm rested on the core of the magnet. In all cases, however, the distinctness of articulation was practically the same. When musical tones produced by the vibration of reeds at the transmitting end of the line wire were transmitted and received, the sound at the receiving end was louder when it was made audible by the diaphragm box magnet receiver than it was when made audible by defendant's Exhibit, Gray's Resonant Box Magnet Receiver, with the box resting upon the cores of the magnet; but the tone was practically the same in all respects but loudness.

Cross-Int. 118. To what extent, if at all, in your judgment, did the chamber of the box in the resonant box magnet receiver, or the upper plate of such box, contribute to the results which you obtained from the use of the instrument? And if, iny our judgment, they con-

3047

tributed at all to the results, state in what way you understand they operated in doing so.

Ans. In order to test the matter which is referred to in the question, I made a number of experiments with an instrument like defendant's Exhibit Gray's Resonant Box Magnet Receiver, with and without the perforated cover of the tin box, and with boxes of two different sizes, the one of the size now on the exhibit or thereabouts, namely, about three inches in diameter, and the other about three and a quarter inches in diameter. When the three-inch box was used I found that the sound was a trifle louder with the cover in place than it was without it, and I presume that the slight difference was due to the operation of the box as a resonator. With the three and a quarter inch box, the depth of which was one and one eighth inches inside, I could not distinguish any difference between the loudness of the tone whether the perforated cover was on or off the box.

Cross-Int. 119. Did you try the electro-magnet without the box to see what sounds, if any, were produced, and, if so, with what results?

Ans. I did, in a very noisy room, and with the following results: I did not hear any tone when my ear was more than half an inch from the magnet or its stand. When the ear was brought in contact with the magnet, and the instrument was standing upon a work-bench, I could hear the tone distinctly. When the instrument was lifted from the bench and one corner of the wooden base of the electro-magnet was brought in contact with the ear, the tone was distinctly heard. When the instrument rested on a work-bench, and a stick of wood, about half an inch square and one foot long, was interposed between the magnet and the ear, the tone was heard faintly.

Cross-Int. 120. Was the tone which you heard under these various conditions without the box of the same pitch as that which you heard when using the box, using of course the same transmitter in each case?

Ans. The experiments to which I referred in my last answer were all made in connection with the same reed transmitter which was used when the experiments, which are referred to in my answer to Cross-Int. 119, were made; and the tone received was, so far as I

could judge, the same in pitch, but the loudness of the tone was far greater when the box was used than when the magnet was tested without any box or diaphragm.

Cross-Int. 121. In the instrument marked "Gray's Wooden Sounding Box Magnet Receiver," in what way do you understand that the wooden sounding box contributes, if it does contribute, to the results that are obtained from the instrument?

Ans. I understand that it contributes in the same manner as the sounding board of a piano contributes; that is to say, that portions of it vibrate in unison with the tone, and thus produce a greater vibration of the air than would be produced if the sounding box were not used.

Cross-Int. 122. In the patent to which your attention has been called, and marked "Exhibit Gray's Magnet Receiver Patent (No. 166,095)," which contains a representation and description of an instrument like that marked "Defendant's Exhibit Gray's Resonant Box Magnet Receiver," I find these passages referring to the instrument, as I understand them: "My invention relates to what I term an electro-harmonic telegraph, and is based upon the fact that an electro-magnet elongates, under the action of the electric current, and contracts again when the current ceases. Consequently, a succession of impulses or interruptions will cause the magnet to vibrate; and if these vibrations be of sufficient frequency, a musical tone will be produced, the pitch of which will depend upon the rapidity of the vibration." Again, in another place: "These vibrations or interruptions of the current will simultaneously produce, in the secondary circuit of the induction coil, a series of induced currents or impulses, corresponding in number with the vibrations of the electrotome; and as the receiving electro-magnet is connected with this circuit, it will be caused to vibrate, thus producing a tone of corresponding pitch, the sound of which may be intensified by the use of a hollow cylinder, S, of metal placed on the poles of the magnet." In what way do you understand that a hollow cylinder of metal intensifies the sound of the electro-magnet?

Ans. I understand that it intensifies the sound in three ways: First, by its molecular vibration relatively to the receiving electro-magnet, it operates inductively, and causes the vibrations of the electro-magnet

3049

to be greater than they otherwise would be. Secondly, that its head, which is in contact with the core of the magnet, is caused to vibrate and thereby operate upon a much larger mass of air than would be acted upon by the ends of the cores of the magnet, which are of much smaller dimensions; consequently sound waves of greater amplitude are produced by the use of the hollow metal cylinder than would be the case if the surface of the poles of the magnet alone operated upon the air. Third, I found by experiment that when the height of the box or hollow cylinder (S of patent No. 166,095) was about that represented in the defendant's Exhibit Gray's Resonant Box Magnet Receiver, the tone heard was a trifle louder with the perforated cover in place than it was without it; and I understand that the slight increase is due to the fact that in such case the partially enclosed chamber of the hollow metallic cylinder acts as a resonator.

Cross-Int. 123. What, as you understand it, causes the end of the cylinder which is in contact with the core of the magnet to vibrate?

Ans. As a matter of fact, I do not know; but I suppose that it is caused to vibrate by one or other, or by both, of two causes, namely, the vibration due to sound waves produced by the magnet itself, and the inductive action of the magnet upon it.

Cross-Int. 124. Do you understand that there would be any substantial difference between cylinders of the same shape made of different metals?

Ans. If the metal be one which is capable of being operated upon by the existing forces, it is my opinion that there would be no substantial difference in the kind of action, but that there would be a difference in the loudness or intensity of the sound depending upon what may be termed the capacity of the metal for inductive action.

Cross-Int. 125. What do you mean by existing forces?

Ans. I mean the forces, whatever they be, which act upon the hollow cylinder when it is placed upon the core of the electro-magnet and the latter is affected by the current of electricity transmitted to it by the line wire.

Cross-Int. 126. Such, for instance, as the sound waves produced by the magnet itself?

3050

Ans. That may be one of the forces, but my impression is that if it be, it is much the smaller in intensity.

Cross-Int. 127. Would there, in your judgment, be any substantial difference, with reference to intensifying the sound of the electro-magnet, between a hollow cylinder made of iron and one made of brass or zinc?

Ans. I believe that there would be no substantial difference in kind, in reference to the subject inquired of, between a hollow cylinder made of iron and one made of brass; but I also believe that there would be a difference in degree, and that the hollow cylinder of iron would produce a greater intensity of sound than one made of brass. I am not able to form an opinion as to the action of one made of zinc, because I have not any information to base an opinion upon.

Cross-Int. 128. What did you mean in your answer to the one hundred and twenty-third interrogatory by "the inductive action of the magnet upon it," — that is, the hollow cylinder?

Ans. I meant the peculiar action which an electro-magnet has upon an armature or plate of metal either resting upon its poles or held in front of them. What the exact nature of that action is I do not know.

Cross-Int. 129. In what way do you understand it acts, and what results follow from such action?

Ans. The "it" in the question, I suppose, is the inductive action. I do not pretend to understand its action, but I have the impression that it causes a molecular vibration of the hollow cylinder of metal or of the head thereof, which is in contact with the cores of the magnet, such molecular vibration corresponding with the molecular vibration of the core of the magnet itself.

Cross-Int. 130. In your answer to the one hundred and twenty-second interrogatory, you speak of the molecular vibration of the metal cylinder upon the poles of the electro-magnet operating inductively, causing the vibrations of the electro-magnet to be greater than they otherwise would be. In what way or from what cause does this inductive action of the cylinder upon the electro-magnet arise?

Ans. As a matter of fact, I do not know; but I understand that when a plate of metal, such as the head of the metal cylinder or box

3051

of defendant's Exhibit Gray's Resonant Box Magnet Receiver, is placed either in contact with the poles of an electro-magnet or in front of them, it operates reciprocally upon the magnet, and that the action of the magnet is more powerful than it otherwise would be. Hence I understand that the inductive action of the electro-magnet upon the head of the tin plate cylinder or box causes that head to react upon the magnet, with the effect of increasing the molecular vibrations.

Cross-Int. 131. From what facts or from what scientific authority do you obtain this understanding?

Ans. I have read a number of books on electricity and magnetism, and got my understanding from what I have read, and I have had the information corroborated by persons with whom I have spoken on the subject, and who have been practical electricians; but I cannot, without hunting through books which I have read, state the particular authority from which I originally obtained information as to the action and reaction of an electro-magnet and its armature.

Direct Examination resumed.

Int. 132. What do you mean by "duration" in your answer to the ninety-eighth interrogatory?

Ans. I mean the length of time during which the armature continues to move, or in other words, the length of time during which the vibrations are continued.

Int. 133. What do you mean by "quality" in your answer to the ninety-ninth interrogatory?

Ans. I mean the pitch, or rate of vibration, and the relative amplitude of the successive vibrations; that is, that the pitch or tone would be the same, and that it would swell or diminish similarly with a swell or diminution of the sound uttered at the transmitting instrument.

Int. 134. In your answer to the eighty-fourth interrogatory you use this language: "But whether or not every instrument which could be constructed in accordance with them would have a certain definite pitch I am not prepared to state." Will you explain a little what you mean by an instrument which might be constructed in

305

accordance with Fig. 7 of Bell's patent and the specification relating thereto, and yet not have a certain definite pitch?

Ans. I had expressed the opinion beforehand that if the instrument was constructed as described in the patent it would have a certain definite pitch, and I had also made the statement that by reason of the want of any figure in the drawing showing the width of the vibrating armature, and from the want of any description giving dimensions, a variety of instruments might be made which corresponded with the drawing as far as it went. The idea which I had in my mind at the time, and which I intended to express in the words of that answer referred to in the present question, was that it might be possible to reduce the armature excessively in width, in which case it might still, when viewed edgewise, look like Fig. 7, but would become exceedingly light, and in such case I was not prepared to state whether the armature would have a certain definite pitch. I notice that the language which I used goes further than I intended, and that the word "them" makes the language refer to both the drawing and the description; whereas the idea that I had in my mind at that time had reference to the drawing alone. There is another part of the same answer which I do not understand to be referred to in the question, and which I think requires some explanation, namely, that portion which states that I am not prepared to state whether the instrument can or cannot be put into vibration only by sounds of corresponding pitch or of a nearly corresponding pitch. The ideas that I had in my mind at that time were that although, as stated by me, I am disposed to believe that a sound of corresponding or nearly corresponding pitch is required to put it (the instrument) into its normal rate of vibration, yet I did not know but what the armature might be caused to vibrate by a jar or clang of some kind which would start it vibrating at its normal rate.

Int. 135. You have spoken of the stretched membrane becoming slack from the effect of the breath after a certain amount of use of the apparatus you have produced as embodying the apparatus mentionod in the fifth claim of Bell's patent of 1876. Did you perceive any difference in the character of the sound you got at the receiving

3053

end, after the membrane had so become slack, as compared with what you had got before?

Ans. I did not. The only practical difference that I noticed was in the adjustment of the instrument: that is, that it became necessary to draw the cone of the transmitting instrument further back from the magnet in order to prevent the armature from striking the magnet.

Int. 136. In your answer to the fifty-ninth cross-interrogatory you speak of certain Bell telephones, which you understood were made and put in use by the Bell Telephone Company, in which the coils of wire are about an inch in diameter and about three eighths of an inch long, measured in the direction of the length of the cores within them. If you have one of these instruments here present, please produce it that it may be put in evidence.

Ans. I produce one of each kind, namely, one (stamped 32) having a box and base adapted to stand upon a table, of which a pair were used by me in making the trials. The other one (stamped 3,587), of a kind adapted to be attached to a wall, which was also tested by me with and without the box or casing.

[*The telephones produced are put in evidence for the defendant, and marked respectively "Defendant's Exhibit Bell Telephone A, W. C. W., Examiner," and "Defendant's Exhibit Bell Telephone B, W. C. W., Examiner."*]

Int. 137. Please give the length of the coil and the diameter of the diaphragm in the case of each of these two instruments.

Ans. The length of each of the coils of the instrument *A* is about a quarter of an inch. The diameter of the diaphragm is about four inches. The length of each of the coils of the instrument *B* is about three eighths of an inch, and the diameter of the diaphragm is about three and seven eighths inches. The diameter of the working portion of each diaphragm is a little less, namely, about five eighths of an inch less.

Cross Examination resumed.

Cross-Int. 138. Do you understand that the meaning with which you say, in answer to the one hundred and thirty-third redirect question, you use the word "quality," is the meaning with which it is

3054

generally used when applied to vocal sounds, or the sounds of musical instruments?

Ans. After my cross examination was ended, I was asked by the counsel for the defendant what I meant by the word "quality" in the answer to the cross question, and gave him in substance the answer which I afterward gave on the record. I was then informed that the word "quality" had a technical meaning when applied to the tones transmitted telegraphically by telephones, and I now know that the meaning with which it is generally used, when applied to telephones as well as to musical instruments, differed from the meaning which I intended and have given upon the record. As to vocal sounds without relation to telephones, I did not receive information, but from the information received by me as to telephones and musical instruments, I now understand that the word is used technically to express a different meaning from that which I had intended. As to its meaning as generally used, as applied to vocal sounds, I cannot say that I have sufficient information to give an opinion.

E. S. RENWICK.

Attest: WM. C. WITTER, *Examiner.*

[*Adjourned.*]

DEPOSITION OF WILLIAM M. GOODRIDGE (*recalled*).

Direct Examination by CAUSTEN BROWNE, Esq., *of Counsel for Defendant.*

NEW YORK, May 6, 1879, 11 A. M.

Int. 1. In your answer to the eighty-ninth interrogatory, page 90 of the record, you mentioned Mr. Gray's use in September, 1875, of an apparatus having a multiple transmitter capable of sending a number of tones simultaneously, each of the volume of one tone sounded separately, and with such multiple transmitter a receiving bar of metal opposite the poles of the magnets, as shown in the Sounding Box Exhibit, and with the circuit constantly closed and with the magnet constantly charged. Will you now produce one of the series of transmitting instruments constituting the multiple transmitter which was used in this apparatus, and explain the manner

3055

in which it operated in connection with the closed circuit to throw upon that circuit electrical undulations answering to the tone of the reed of each transmitter?

Ans. I produce one of the identical transmitters used. [*The instrument produced is put in evidence for the defendant, and marked "Defendant's Exhibit Gray's Multiple Transmitter of* 1875, *W. C. W., Ex'r."*] It consists of a tuned reed fastened firmly to a post mounted upon a wooden base. An electro-magnet is also mounted upon the base on each side of the reed and near the free end, supplied with adjusting screws for the purpose of adjusting the magnets a proper distance from the reed. The magnets are so connected that when the battery is applied, the reed is caused to vibrate, and in so doing alternately changes the magnetic power from one magnet to the other, thereby causing a continuous vibration. On either side of the reed, about an inch from the fixed end, a light spring, of German silver, with platinum at one end, is attached, opposite to which are mounted upon the base, posts which carry contact screws. There are, also, upon the base, four binding posts, two of which are used to connect the local battery causing the vibrations; the other two, for connecting wires from the main battery. The contact screw and spring on the left side of the reed (that is, at my left, as I place the instrument before me, with the magnets farthest from me) are in the local circuit. Those on the right are in the circuit from the main battery.

The magnet on the right of the reed is wound to one ohm resistance, the one on the left to thirty ohms. When the local battery is connected with the instrument, and the local contact screw and spring are in contact, the low resistance magnet only is in the circuit, the other or high resistance magnet being cut out by the contact of the screw and spring. The free end of the reed is immediately drawn toward the low resistance magnet, separating the contact between the local screw and spring, thereby letting into the circuit the high resistance magnet in addition to the low one. It is a well known fact that when two magnets of different resistance, other things being equal, are placed in the same circuit, and a battery current sent through them, the magnet having the higher resistance develops the stronger magnetism; consequently, the reed is drawn

3056

back towards the high resistance magnet, which immediately cuts out the high resistance magnet, and the operation is repeated a number of times per second, corresponding to the natural rate of vibration of the reed. In this case the local battery circuit is never open. For convenience of description I have lettered the different posts of the exhibit. C is the post to which the reed is fastened. I and I′ are the posts which carry the contact screws. F and F′ are the binding posts for the local battery, and G and G′ are the binding posts for the main battery connections. When the local battery is connected to the posts F and F′, the current passes from F′ to the low resistance magnet, which is the one nearest to it; through it to the post I, carrying the local contact screw; and when its contact with the spring is closed, passes through the spring to the reed, through it and the post C, and from post C through binding post F, back to battery.

When the contact is broken between the post I and the reed, the current passes from the post I to the high resistance magnet (the one nearest to it), through it to the post F, and back to battery. When this instrument is attached to the main battery, the wires from the main battery are connected to the binding posts G and G′. The post G is connected with the post I′ carrying the contact screw, and the reed and post C are connected with the post G. In the use referred to in the question, a Morse key was placed in one or other of the wires between the main battery and the posts G or G′. When such key was closed, the current from the main battery passed to post G′, from thence to the post I′, and when in contact with the reed it passed through the reed and post C to the post G, and from thence to the main battery. The method of connecting the instruments with the main battery, during the use referred to in the question, is shown in the drawings of patents granted to Mr. Gray, numbered 175,971, dated April 11, 1876, No. 186,340, dated Jan. 16, 1877, and No. 205,378, dated June 25, 1878. In the use referred to in the question, four instruments like the exhibit were connected with the main battery at the transmitting end of the line in such a manner that each had a definite section of the main battery. When the local batteries were connected with the transmitters, each transmitter having its local battery, and the reeds vibrating continuously, and the

AMERICAN BELL TELEPHONE COMPANY, -14

3057

instruments and keys (one key for each instrument) in connection with their sections of main battery, and the keys all open, the current from the entire main battery was upon the line and through the receiving instruments to the ground plate at the distant end, the other pole of the main battery being connected with the ground plate at the transmitting end, making the circuit complete. When either of the keys was closed, every time the contact screw I′ and spring upon the reed of the instrument connected with said key came in contact, that section of the battery connected through that closed key with the instrument was short-circuited, thereby taking off from the line the power of that number of cells contained in said section; and when those contact points separated, the power of that section of the battery returned to the line, thereby alternating the strength of the current on the main line.

[1 *P. M. adjourned to* 1.45 *P. M.*]

1.45 P. M., *resumed.*

In addition to the above description of the transmitting instruments, I wish to say that the current from the main battery does not at any time pass through the magnets forming part of such transmitters.

Int. 2. Does the apparatus contain a means of adjustment for preventing the reed in its vibrations from touching the poles of the magnets; if so, what is it?

Ans. The magnets are supplied with screws by which they can be drawn farther from the reed or placed nearer to the reed, and firmly clamped in whatever position, with relation to the reed, they are found to work best, never being touched by the reed.

Int. 3. In his answer to the thirty-fifth interrogatory, Mr. Elward S. Renwick speaks of certain experiments which he had made with what he understood to be Bell telephones, said experiments being with the sounding box or cover off the instrument or on it, with a view to ascertain practically whether the presence of the sounding box or cover had any useful effect for the purpose of distinctness or loudness of sounds transmitted or received. Did you assist in those experiments?

Ans. I did.

Int. 4. Does Mr. Renwick state correctly their character and results?

Ans. He does, so far as my observation goes. I witnessed all the experiments he made with these instruments, and tried the same experiments myself, and the results I obtained corresponded exactly with his.

Int. 5. In his answer to the thirty-ninth interrogatory, he states certain experiments bearing upon the question as to the importance of the chamber in front of the diaphragm of the Bell patent of 1877, and of the mouthpiece in that patent, as to the matter of distinct and loud speaking or hearing. Did you witness or assist him in those experiments, and will you state what you can as to whether Mr. Renwick correctly gives their character and results?

Ans. I assisted him in these experiments, and also tried them myself, obtaining the same results as he describes in his answer to the thirty-ninth interrogatory.

Int. 6. In his answer to the eighth interrogatory, he describes certain practical operations which he conducted in connection with others, by the use of an apparatus constructed in conformity with the specification and drawings of the Bell patent of 1876, as respects the matter referred to in the fifth claim. Did you have anything to do with those experiments? If so, what? And will you state how far you are able to verify from your own observation the correctness of the account which he gives of them and of their results?

Ans. I assisted him in the experiments referred to, part of the time being at the transmitting instrument and part of the time at the receiving instrument. I did a good deal of talking and shouting into the transmitting instrument, part of the time by counting, and part of the time by sounding different tones of the diatonic scale loudly, such as the first, third, fifth, and octave of the scale. I also listened at the receiving end, and heard sounds such as he describes proceeding from the receiving instrument. The results which I obtained when listening are exactly those described by Mr. Renwick as received by him when I was transmitting.

Int. 7. In his answer to the forty-second interrogatory, Mr. Edward S. Renwick says that in conjunction with you he made a number of experiments with certain common receivers, testified as

3059

used by Mr. Gray in 1874 or 1875. Will you state whether Mr. Renwick describes correctly the character and the results of those experiments?

Ans. Mr. Renwick's description is correct. I obtained on the same occasion the same results which he describes. In these experiments we were assisted by Mr. Glass, foreman of the Western Union shops, who usually did the talking while I was listening.

Int. 8. On page 881 of Prescott's "Electricity and the Electric Telegraph," I find the following account of a telephone which Prescott says was constructed by Professor Bell. The principle of his method is illustrated in Fig. 523.

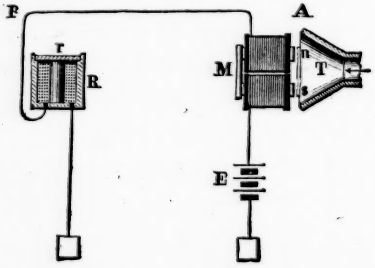

"A represents the transmitting and B the receiving apparatus. When a person speaks into the tube T, in the direction of the arrow, the acoustic vibrations of the air are communicated to a membrane tightly stretched across the end of the tube, upon which is cemented a light permanent bar magnet, *n s*. This is in close proximity to the poles of an electro-magnet M, in the circuit of the line, which is constantly charged by a current from the battery E. The vibrations of the magnet *n s* induce magneto-electric pulsations in the coils of the electro-magnet M, which traverse the circuit; and the intensity of these pulsations is in proportion to the vibrations of the magnet. Consequently, this apparatus is capable of transmitting both the pitch and intensity of the tones which enter the tube T. The receiving instrument consists simply of a tubular electro-magnet R, formed of a single helix with an external soft iron case, into the top of which is loosely fitted the iron plate R, which is thrown into vibrations by the action of the magnetizing helix." How does the apparatus here described and represented compare with the telephone which Mr. Bell exhibited at the Philadelphia Centennial?

3060

Ans. I witnessed the experiments made in Philadelphia on the 25th of June, 1876, by Professor Bell, and saw the apparatus described in the passage you have quoted. I consider the cut a fair representation of the instrument I saw. My impression of the receiving magnet is that it was somewhat longer in comparison with its diameter than the cut shows it to be; also that the tube T, as I remember it, was considerably longer than it is represented in the cut. I should say the tube I saw was about six inches long.

Int. 9. In the apparatus described and shown in the passage I have read from Prescott's book, is the external soft iron case at the receiving end in magnetic connection with the core, so as to be magnetized as well as the core by the passage of the current through the coil?

Ans. As I understand it, it forms one pole of the magnet, of which the central core forms the other pole; consequently it must be in magnetic connection with the central core.

Int. 10. You stated on your former examination that a sounding box, like that which makes part of the "Exhibit Gray's Resonant Box Magnet Receiver," was sent to Washington as a model, accompanying his application for his original magnet receiver patent. Of what material was this sounding box, which went to the Patent Office, made?

Ans. It was made of what is commonly called tin plate, said plate being thin iron plate coated with tin.

Int. 11. I do not remember that it has been testified of what material the concave metallic diaphragm receiver, made in Chicago in July, 1874, was made. Please state.

Ans. The concave metallic diaphragm was also made of sheet iron, coated with tin.

Int. 12. In one of the extracts which have been put in evidence from Professor Bell's London lecture, describing an apparatus such as is represented by Fig. 7 of his patent of March, 1876, he says that the diaphragms were made of gold-beater's skin. Please to state, if you know, what the character of this material is, its degree of thinness, and of sensitiveness to moisture, as compared with the material of which the diaphragms are made in the defendant's Exhibit Bell Apparatus of 1876 Patent.

3061

Ans. Gold-beater's skin is a very thin animal membrane. How it compares in thickness with the diaphragms in defendant's Exhibit Bell Apparatus of 1876 Patent I do not know exactly, but should think it was three or four times thinner. On account of its thinness, I think it is very much more sensitive to moisture than the parchment used in the exhibit spoken of. When the instruments were first made which are in this case as exhibits, and marked respectively "Defendant's Exhibit Bell's Apparatus of 1876 Patent Receiver," and "Defendant's Exhibit Bell's Apparatus of 1876 Patent Transmitter," the diaphragms were made of gold-beater's skin. When placed upon the cones they were moistened and stretched tightly and wired so that they could not slip off. When dry they were very tight and tense. After standing a little while in a warm room, I found both of the diaphragms had burst, and was obliged to put on new pieces. This was done in Chicago. When they arrived in New York I found they had burst again. I then procured the parchment of which the diaphragms now on the instruments were constructed, and had them mounted as they now are at the shop of the Western Union Telegraph Company. These latter diaphragms retained their elasticity longer than the former thin ones did; or in other words, you can use the transmitter a much longer time before the diaphragm is affected by the moisture of the breath and becomes flabby.

Cross Examination by J. J. STORROW, Esq., *of Counsel for Complainants.*

Cross-Int. 13. Where were you from the first of May, 1874, until you went abroad in August of the same year?

Ans. In Chicago, with an occasional little run into the country.

Cross-Int. 14. Did you come East during that time?

Ans. I did not.

Cross-Int. 15. Look at the tenth question and answer, in your deposition of today. Have you any personal knowledge that what is there called the sounding box was ever filed in the Patent Office?

Ans. I have not.

Cross-Int. 16. The Mr. Prescott spoken of in the eighth question and answer of today's deposition is the same Mr. Prescott spoken of in Mr. Gray's seventy-second, seventy-fourth and seventy-

eighth cross-answers, pages 130 and 131 of the printed record, is he not?

Ans. I so understand it.

Cross-Int. 17. The apparatus of Professor Bell, which you referred to in your eighth and ninth answers of today's deposition, is the same as that referred to in Mr. Gray's fifty-third answer, page 126 of the printed record, is it not?

Ans. Yes, that is the same.

Cross-Int. 18. Is the description of the small circular plate of iron or steel, and of its relation to the iron tube and core of the tubular magnet receiver of Professor Bell, which is found in that answer of Mr. Gray, correct according to your recollection?

Ans. It is.

Cross-Int. 19. Look at your twelfth answer of today's deposition. Did you personally attach or see any one else attach the membranes which you say were mounted at the shop of the Western Union Telegraph Company in New York?

Ans. I did not. I told them how to do it, and left it for them to do.

Cross-Int. 20. I understand from your first answer in today's deposition that the function and effect of the local battery of each transmitter, when they are all connected up in the manner described in that answer, is to cause the reed to vibrate, and that the current from that local battery does not ever pass over the main line to the distant station. Am I correct in this?

Ans. That is correct.

Cross-Int. 21. I understand from that answer, and particularly from that passage in the latter part of it which describes what takes place when the key of any particular transmitter is closed, that when in the course of the vibration of the reed, caused by the action of the local battery, contact is made between the reed and the contact screw I′, the current from those cells of the battery which are appropriated to that particular transmitter passes through that contact, and through a short circuit back to the other end of those cells, instead of being forced to go over the main line. Am I right in that?

Ans. The bulk of the current is so diverted from the line through

3063

the short circuit when the reed and contact screw I′ are in contact. A small portion, however, is still upon the line.

Cross-Int. 22. The amount which is thus diverted, and which you call the bulk of the current as compared with the small amount which passes over the line, depends upon the comparative resistance of the passage of the electricity offered by the short circuit, when that is completed by closing the contact in the manner spoken of in the last question, and the resistance of the long circuit over the line through whatever apparatus may be connected up as part of it at the distant station, and back through the earth to battery. Is this so?

Ans. It is.

Cross-Int. 23. When the reed in this transmitter vibrates over on the other side of its path, so as to break contact between the contact screw I′ and the reed spring, the short circuit is broken or opened, and this amount, which you call the bulk of the current, instead of going through the short circuit, as in the case stated in the twenty-first cross-question, is forced to go over the line to the distant station and through the receiving instruments which are there connected up in the line, and thence back through the earth to the battery. Is this so?

Ans. That is so.

Cross-Int. 24. That amount of current which you call the bulk of the current, and the amount of which is determined by the relation of the resistances, as stated in the twenty-second cross-question and answer, is alternately thrown through the line and receiving instrument at the distant station, or diverted from the line and receiving instruments each time the reed of the transmitting instrument in its vibration breaks and makes the contact with the contact screw I′, when the instruments and apparatus are used and connected up in the manner described in your first answer of today's deposition. Is it not so?

Ans. As I understand the question, that is so.

WM. M. GOODRIDGE.

Attest: W. C. WITTER, *Examiner*.

[*Adjourned to May* 7, 1879, *at* 10 *A. M.*]

DEPOSITION OF ELISHA GRAY (*recalled*).

Direct Examination by CAUSTEN BROWNE, Esq., *of Counsel for Defendant.*

NEW YORK, May 7, 1879, 10 A. M.

Int. 1. It appears from the testimony of Mr. Goodridge, that there were made for you in Chicago, in 1874, before you went abroad, two resonant box magnet receivers, like the exhibit of that name, each made of tinned iron, and that one of these was sent to Washington as a model accompanying your application for your magnet receiver patent, No. 166,095, dated July 27, 1875. Did you take this resonant box magnet receiver yourself to Washington?

Ans. I did.

Int. 2. Did you personally know that it was deposited in the Patent Office as the model making part of your application for your magnet receiver patent above mentioned?

Ans. I know that it was sent there for that purpose by Mr. Hayes, who was at that time my patent attorney. I will add that Mr. Hayes was in Washington with me at that time, and that the drawings of the magnet and the resonant box were made at Washington, and when completed I compared them with the models.

Int. 3. Do you remember seeing the model on the files of the Patent Office at any time after your application was filed or your patent granted?

Ans. I do remember having seen it on several occasions, both in the case in the model room, and in the room of the examiner.

Int. 4. Where in Washington were the drawings made to which you referred just now?

Ans. They were made in the office of Hill & Ellsworth, patent solicitors, to the best of my recollection.

Cross Examination by J. J. STORROW, Esq., *of Counsel for Complainants.*

Cross-Int. 5. What was the date of the occasions referred to in the third answer?

Ans. I cannot give you the exact dates. I was a frequent visitor

3065

at Washington, and often had occasion to look through the model cases, and saw these incidentally. Sometimes I was showing my friends through the office, and called particular attention to the models as representing my inventions.

Cross-Int. 6. State as nearly as you can when you recollect having seen in the model room of the Patent Office, in connection with or as part of the model for patent 166,095, a tin box like that of the exhibit referred to in the first question of to-day's deposition?

Ans. To the best of my recollection, the first time I saw it was not a great while after the issue of the patent in which it is represented.

Cross-Int. 7. How soon after?

Ans. I cannot tell how soon it was, but during the first few months following the issue of the patent; it may have been one and it may have been six.

Cross-Int. 8. Are you sure you saw it within six months of the issue of that patent?

Ans. I am sure I saw it, and I believe it was within six months.

Cross-Int. 9. Was it within five months of the issue of that patent?

Ans. I don't know.

Cross-Int. 10. Who was with you on the occasion when you say you saw it?

Ans. I cannot, without refreshing my recollection, state who was with me, as the occasions of my visits were so frequent that I only recollect at this moment the fact that on some of the occasions I had friends with me, but I cannot tell whether there was any one with me the first time I saw it or not.

Cross-Int. 11. When do you think you saw it the second time in the model room?

Ans. I cannot fix the dates exactly, but the times that I saw it occurred between the date of the issue of the patent, July 27, 1875, and about the same date 1877. I saw one portion of it, namely, the magnet portion, within the last six months. To my best recollection, about midwinter, 1878–9.

Cross-Int. 12. All my questions as to what you saw in the Patent Office at Washington have had reference to a tin box like

that now attached to the exhibit, and not to the magnet portion of the receiver. If you have answered the questions upon any different understanding, please say so, and correct your answers if need be.

Ans. All of my answers, with the exception of so much of the last answer as especially refers to a part, referred to the model as a whole, consisting of the magnet, mounted upon a base, and the tin box.

Cross-Int. 13. Can you fix the occasion when you think you saw in the model room such a tin box as part of the model of the patent 166,095, any more definitely or any differently from what you have done in your eleventh answer? If you have any recollection, different or more precise than that stated in your eleventh answer, please to give it.

Ans. I cannot fix the dates more definitely at this moment. I think I could do so, however, if I had time to refer to data that would fix the occasions, which I have not with me.

Cross-Int. 14. When did you first go to that model room for the purpose of finding or looking at such tin box?

Ans. I do not recollect of going at any time for the specific purpose of looking for the tin box. The times that I saw it were, as I stated before, when I was looking through the models generally.

Cross-Int. 15. What was the date of the occasion when you think you saw in the examiner's room, as part of your model 166,095, a tin box, like that now tied to the exhibit?

Ans. I cannot fix the date more nearly than I have. The most of the times I saw it was in the model case up stairs.

Cross-Int. 16. Give me your best recollection as to when you saw such a box, as part of that model in the examiner's room.

Ans. To the best of my recollection it was during the latter part of the time between the dates of the issue of the patent, and about July, 1877, as mentioned in my eleventh answer.

Cross-Int. 17. What occasion did you have for it in the examiner's room during that period?

Ans. I had no occasion for it. I merely saw it incidentally when I called on the examiner, as I frequently did.

Cross-Int. 18. Did you on any of those occasions have any con-

3067

versation with the examiner about that particular part of the model which consisted of said tin box?

Ans. Yes, on a number of occasions. These conversations were with reference to the patent and its bearing upon other cases.

Cross-Int. 19. Who was the examiner you conversed with?

Ans. Mr. Wilber was examiner during a portion of the time, and Mr. Townsend since Mr. Wilber left that department.

Cross-Int. 20. What was the date, as nearly as you recollect, of the first of such conversations with Mr. Wilber?

Ans. My recollection is that the conversations referring to the before mentioned model were mostly with Mr. Townsend.

Cross-Int. 21. When did you have your first conversation with Mr. Townsend about the model, having at the same time such a tin box, forming part of that model, in the examiner's room with you?

Ans. I do not recollect when the first conversation took place, but I recollect that the operation of the model, as described in the patent in some of its bearings, was discussed soon after filing the application for reissued patent, granted Jan. 28, 1879, applicati n filed May 7, 1878. I do not think I saw the model at this time, or any part of it, later than above date till the winter of 1878–9, mentioned in my eleventh answer, my attention then being called for the first time to the fact that the tin box had been mislaid or lost.

Cross-Int. 22. Did you have such a tin box before you in the examiner's room, as part of that model, upon any of the occasions referred to in your last answer?

Ans. I do not think we had, as there was no occasion for it. The time or times I saw it in the examiner's room, it was on the shelf with the other models. It is always my habit to see everything of that character when I am where they are.

Cross-Int. 23. Was there such a box as part of that model anywhere in the examiner's room, upon the occasions referred to in your twenty-first answer?

Ans. To the best of my recollection, there was such a box in the examiner's room, and I have a clear recollection of seeing the box tied to the magnet, as shown in defendant's Exhibit Gray's Resonant Box Magnet Receiver, either in the examiner's room or in the model case up stairs.

[*Whole of answer objected to as irresponsive.*]

Cross-Int. 24. Please to read the last question again and answer it.

Ans. I meant to say in my last answer, that to the best of my recollection there was such a box in the examiner's room, on some of the occasions referred to in my twenty-first answer. I think the matter was talked of, after the date mentioned, as the time I first discovered that the box was lost, namely, the winter of 1878–9.

Cross-Int. 25. In your twenty-first answer you spoke of some discussions which you say took place in the examiner's room soon after May 7, 1878. I want to know whether, during those discussions after May 7, 1878, such a hollow tin box, such as is shown in the exhibit, was present in the examiner's room as part of the model of patent 166,095?

Ans. I have said in my twenty-first answer, in speaking of the discussion which took place after the filing of the reissue application, "I do not think I saw the model at this time, or any part of it," and I here repeat that I do not think that I saw it at that time.

Cross-Int. 26. Am I to understand that you do not know whether such a box existed in the examiner's room as part of that model, on any of the occasions referred to in the last question?

Ans. I understand your twenty-fifth question to refer only to the discussions which took place in the examiner's room after the filing of the application for reissue, May 7, 1878, and I mean to say that I do not know whether the model, including the tin box, was in the room at that time or not. I have no recollection of seeing it on that occasion or any occasion later, so far as the question relates to the tin box.

Cross-Int. 27. Will you now tell me, as nearly as you can, the date when you did see such a tin box as part of that model in the examiner's room?

Ans. I cannot fix the dates any nearer than I have in my answer to the sixteenth cross-question.

Cross-Int. 28. The period referred to in that answer covers two years. Can you fix the occasions as being within the last six months of those two years?

Ans. I cannot with certainty.

Cross-Int. 29. Can you fix them as not being within the first six months of those two years?

3069

Ans. I cannot swear that I did not see it there during the first six months of those two years, but it is my impression, as I before stated, that it was later that I saw it in the examiner's room. By "it," I mean the model, including the box.

Cross-Int. 30. Did you, on any occasion when you knew that such a tin box was in the examiner's room, have any conversation with him on the subject of such a box?

Ans. I have a general recollection that on several occasions the model, including the box, was referred to incidentally, as they naturally would be during the discussions which took place relating to the various applications that I had made from time to time, bearing upon the general subject of telephonic transmission. (I include in that latter phrase what is known as harmonic telegraphy.) And that on some of these occasions the model, including the box, was in the examiner's room.

Cross-Int. 31. Do you refer in your last answer to any discussions which took place after the period between July, 1875, and July, 1877, mentioned in your twenty-seventh cross-answer?

Ans. I refer to conversations which took place before the date of the filing of the reissue application, May 7, 1878, and to the best of my recollection before July, 1877.

[*Adjourned to* 2.30 *P. M.*]

2.30 P. M.

Cross-Int. 32. What are the "other cases" referred to in your eighteenth cross-answer?

Ans. By "other cases" I referred to my patents generally, and applications pending, relating to the transmission and reception of musical tones, whether composite or otherwise.

Cross-Int. 33. In those discussions prior to July, 1877, did you refer to or discuss with the examiner the peculiar functions or mode of operation of the resonator, or box of metal, described in your patent 166,095, as distinguished from the rest of the apparatus?

Ans. To the best of my recollection, I did.

Cross-Int. 34. What application was under consideration between you and the examiner when you had such discussion with him?

Ans. As I recollect it now, this matter was discussed about the

time of the issue of the patent No. 166,095, dated July 27, 1875, and of the patent No. 186,340, dated Jan. 16, 1877, and patent No. 175,971, dated April 11, 1876. These are the cases I call particularly to mind.

Cross-Int. 35. In those discussions did you refer to any function or mode of operation or characteristic of such a box, other than what is mentioned in the patent No. 166,095?

Ans. I do not know that all the functions of the resonant box receiver we discussed are described in the patent. The point at issue was the bearing that this receiver had upon those shown in the above-named patents, numbered respectively 175,971 and 186,340. In the two latter cases, receivers are described or referred to, that were adapted to receive a tone or tones of a definite pitch, rejecting all others, whereas the resonant box was used as a common receiver for all tones.

Cross-Int. 36. And was that characteristic or mode of operation of the receiving apparatus of patent 166,095 what you talked about in those discussions?

Ans. It was, so far as the discussions related to the above-mentioned cases.

Cross-Int. 37. Did you, before July, 1877, have any discussions with the examiner on the subject of such a tin box, except such as related to the cases referred to in your thirty-fifth cross-answer?

Ans. There may have been, but I do not now recollect.

Cross-Int. 38. I notice that your patent, No. 166,095, is entitled patent for an "improvement in electric telegraphs for transmitting musical tones," and that the first and second questions in today's deposition refer to it as "your magnet receiver patent." When did you first hear it called "magnet receiver patent"?

Ans. I first heard it called magnet receiver in 1874, long before it was patented.

Cross-Int. 39. My question was when you first heard that patent called your "magnet receiver patent." Please answer when that was.

Ans. To the best of my recollection, about the time it was issued first.

ELISHA GRAY.

Attest: W. C. WITTER, *Examiner.*

3071

BOSTON, May 7, 1879, 3.30 P. M.

DEPOSITION OF AMOS E. DOLBEAR.

Direct Examination by CAUSTEN BROWNE, Esq., *of Counsel for Defendant.*

Int. 1. Please state your name, age, residence, and occupation.

Ans. Amos E. Dolbear; I am forty-one years of age; reside in West Somerville, Mass.; I am a teacher.

Int. 2. Do you hold any office as teacher in any institution of learning in this neighborhood?

Ans. I do. I am Professor of Physics and Astronomy, at Tufts College. I have held that chair in that college for five years.

Int. 3. Please state what, if any, similar positions you previously held elsewhere, and also state how long you have devoted your time to the study of physical science or to instruction therein.

Ans. Before I was at Tufts College I held the position as Professor of Physics and Natural History at Bethany College, West Virginia. I held that position for six years. Before that I was Assistant Professor of Natural History in Kentucky University, for one year, and prior to that was instructor in chemistry, in Michigan University, for one year. As a teacher, I have given instruction in physical science since 1856.

Int. 4. When did you first turn your attention to the subject of the speaking telephone, and when did you first make a record of the results of your thought upon that subject?

Ans. My first attention to the telephone that I have any memory of now was in August, 1876, at which time I made some experiments bearing upon that subject. The principles involved in this I had been at work upon a considerable time before this, say for three or four years. In 1873 I made some experiments in which the relations of sound and electricity were materially involved, and using in these experiments closed circuits and permanent magnets and vibrating tuning forks, the results of which were the discovery of what I took at the time to be a new phenomenon, namely, the convertibility of sound vibrations into electrical undulations. A part of these experiments were embodied in a paper and pre-

3072

sented to the American Association for the Advancement of Science, which met in Portland, Maine, in August, 1873. In another part of those same experiments, which were not described at that meeting, were noted the effects of a vibrating magnet on a closed circuit, the explanation of which was I understood to be but a special case of well-known phenomena. In September, 1873, I invented a little instrument which I named an opeidoscope. The structure of this instrument was that of a membrane over the end of a tube carrying in the middle a small mirror, upon which a beam of light was permitted to fall, to be reflected across the room. When a vocal sound was made in the tube, the membrane was made to move and a characteristic form was seen upon the wall. The first experiment which I performed in my attempts of transmission of speech were with Helmholtz's automatic interrupter in circuit with an electr -magnet. In this was reproduced first Paige's experiment, the wires being led between two rooms. I next proposed to utilize the vibrations of the membrane of my opeidoscope to do for the circuit what was done by the interrupter of Helmholtz, namely, to break it the number of times per second due to the pitch of the voice, making the membrane vibrate. To accomplish this I bent a wire at right angles to the membrane and fastened it to the membrane at the middle of the membrane, and so fixed the end of this wire that it completed the circuit when touching upon a globule of mercury. I afterwards replaced the wire with a conical piece of iron still attached to the membrane. The conical form was given to it with the expectation that the vibratory motion of it into and out of the mercury would change the cross section without breaking the circuit, and thus vary the resistance. The effect of the latter was to make the mercury bound away, and the current was therefore interrupted; it was broken instead of being simply partially interrupted. The result was that the sounds transmitted were only those of the pitch of the voice, and not articulate speech. For a receiver at that time I used two or three different contrivances, one a small telegraph model, with which my best results were obtained. The next matter I will speak of is the work of Sept. 20, 1876. On Sept. 20, 1876, I have a record made at that date in my private memorandum book. The record is as follows: "Let a coil of wire be about the pole of a

3073

permanent magnet, and the terminals be attached to a galvanometer, then when a piece of iron approaches the magnet a current is induced; suppose that the wires connect with another coil about a permanent magnet, then the current will affect a piece of iron in front of the poles in the same way as the first is affected. In this way a telephone may be constructed by making a sound to vibrate a piece of sheet iron in front of one magnet; the ear applied to the other magnet should hear the kind of sound made at the first." This has a date of Sept. 20 appended to it, and here is a diagram on the same page representing the apparatus above described. The book is dated 1876, and contains my entries of that year. I produce a fac-simile of the diagram to which I refer.

[*The copy of the diagram is put in evidence for the defendant, and marked "Defendant's Exhibit Dolbear Diagram, of Sept.* 20, 1876, *J. H. T., Special Examiner."*]

DEFENDANT'S EXHIBIT, DOLBEAR DIAGRAM OF SEPTEMBER 20, 1876, J. H. T., SPECIAL EXAMINER.

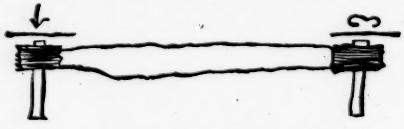

[*Adjourned to May* 8, 1879, *at* 10. 30 *A. M.*]

MAY 8, 1879, 10. 30 A. M.

There were many other experiments and demonstrations made by me, relating to telephony, prior to 1877, and beginning as far back as 1864, but I omit particular reference to them, as I understand they are not material in this suit.

Int. 5. What were the first steps you took, and how soon after Sept. 20, 1876, to have the plan of speaking telephone, which is contained in your diary as above quoted, carried into practical operation?

Ans. Certainly within a week or two from that date I employed Mr. Albert Stetson, a student who only came on Saturdays to work, to make a pair of speaking telephones after that plan. The instructions were given to him on the blackboard by drawings made there,

3074

and he was to employ two straight-bar permanent magnets belonging in the college collection, about one pole of each of which was to be wound a coil of wire, and for the vibrating armature two opeidoscope tubes were to be employed, each having a piece of sheet iron fastened to the middle of it. These were to be in electric circuit with each other. These were not completed by him on that day. One of these, however, was done, and in the haste to observe what might be possible to be done with it, it was included in circuit with a small model telegraph register, with the expectation that some audible results might be manifest. There was no time for experiment. It was simply coupled up for a minute or two, as it was train time, and Mr. Stetson had to go.

Int. 6. In the directions which you gave Mr. Stetson at this time you say he was to wind a coil of wire about one pole of each permanent magnet. Was such winding directed to be done, and was it in fact done on any particular part of the length of the bar or along the whole length?

Ans. The instructions were to wind it on the end on the pole nearest to the vibrating armature as shown on my drawing, and he did so.

Int. 7. What did the opeidoscope tubes have at the ends nearest the magnets, to which the piece of sheet iron, you speak of, was fastened?

Ans. The one which was first made had a piece of thin rubber diaphragm stretched across one end of the tube, and the piece of sheet iron was glued to the middle of this rubber.

Int. 8. Please state all that Mr. Stetson did in the way of carrying out your directions after making this tube with rubber diaphragm and armature, and winding the magnets as you have described.

Ans. Before his next visit to the college, I had determined that it would probably be better to make the entire diaphragm of sheet iron, and proposed that the pair should be constructed in that way. When Mr. Stetson came, I gave him instructions to do this. The tubes which he was expected to fix in this way were some wooden spouts about three inches or three and a half in diameter, and the diaphragm was to be fastened to one end; otherwise mounted as in

3075

the first case. Mr. Stetson did some work on this plan, but not to complete the telephone. In this shape he left the work, to return, as I supposed, on the following Saturday, but after that he failed to come for several weeks. My impression is, that he did no more work on that, for it was postponed along into the winter.

Int. 9. Why did not you give your personal attention to constructing your telephone during this time from Sept. 20 until along into the winter?

Ans. One reason was that I was expecting Mr. Stetson to finish it. Another reason was that my own professional duties were sufficient to occupy nearly the whole of my time, and I was otherwise employed in writing a book which is partly published.

Int. 10. State where Mr. Stetson is, and how long you know he has been there.

Ans. He is in Europe, and has been there nearly two years.

Int. 11. By the plan shown by your memorandum of Sept. 20, 1876, and the accompanying drawing, and by the instructions given to Mr. Stetson, was the telephone at each end of the circuit capable of being used either to speak through or to hear from as desired?

Ans. The two instruments were exactly alike, and each had the function of receiver and transmitter.

Int. 12. How soon after Sept. 20, 1876, were you able to and did you personally begin the construction of a telephone upon the plan you have described, with the diaphragms composed wholly of metal?

Ans. I personally began the construction of a pair of telephones involving that plan the last part of December, 1876. It was between Christmas and New Year that I began.

Int. 13. Did you work upon it as expeditiously as you had time to do, until it was finished?

Ans. No, I did not.

Int. 14. When did you finish it?

Ans. The last part of January or first part of February; I can't exactly state the time, but it was some time after it might have been finished.

Int. 15. What was the reason you did not hasten the work after you began it?

Ans. I had the special object in making these to apply for a patent for the invention, but learned that Professor Bell had said that he had patented the thing two or three years before, and as my object was to get a patent upon it, there was no longer the necessity or need for haste. This was about the 6th of January.

Int. 16. From whom did you receive this information as to what Professor Bell said?

Ans. From Mr. P. D. Richards, of West Medford.

Int. 17. Have you in your possession the instrument, which you began in December, 1876, and finished in January or February, 1877?

Ans. I have.

Int. 18. Will you produce it, to be made an exhibit in this case?

Ans. I have here present one of the pair of instruments, and now produce it. The other one is just like it, and is now out at Tufts College, and I can produce that also if necessary.

[*The instrument produced is marked "Defendant's Exhibit Dolbear Telephone, J. H. T., Special Examiner," and is put in evidence for the defendant.*]

Int. 19. Will you explain how this instrument and the mate to it were set up and operated, and where this was done for the first time, and with what results?

Ans. It was coupled up with a double wire between two separate rooms at Tufts College. The first time it was set up, talking was carried on and it proved to be a good speaking telephone. This was done as soon as the instrument was finished.

Int. 20. I notice screw holes on the side of the upright piece of wood where the diaphragm is screwed on. What were these holes for? Was the diaphragm originally square in shape?

Ans. The original diaphragm was square.

Int. 21. But applied, I suppose, against a round hole in the wood, as now?

Ans. The same round hole.

Int. 22. You have spoken of a Mr. Richards as telling you, about the 6th of January, 1877, what Professor Bell said to him. What knowledge, if any, had Mr. Richards prior to Jan. 6,

3077

1877, of what you had done and proposed to do in the matter of making a speaking telephone?

Ans. I had explained to Mr. Richards, in the latter part of December, 1876, my invention of the magneto-telephone, in his office.

Int. 23. Did you after constructing and testing the telphone, of which you have produced one instrument, apply for a patent in this country for it?

Ans. Not immediately. An application for a patent on this was not made until October, 1877.

Int. 24. What was the reason for the delay in applying for the patent?

Ans. The reason at first was I had supposed the principle had been patented a year or two, but about the last of February I learned that it had been patented in January of that year, and then I began to take steps to procure a patent. I tried to enlist some friends in the attempt, but without success. I also sought a lawyer's counsel concerning the matter, who discouraged me from the attempt by telling me what the probable cost of it would be. I had no means for contesting the patent, and had to wait until I found friends able to attempt it.

Int. 25. After your application was made for the patent, was it put into interference with Mr. Bell's patent, which had been granted him in the previous January?

Ans. It was.

Int. 26. Is there any agreement as to whom your patent shall belong to, if granted?

Ans. There is. There is one made with the Gold and Stock Telegraph Company, of New York City, who are to own the patent.

Cross Examination by CHAUNCEY SMITH, Esq., *of Counsel for Complainants.*

Cross-Int. 27. Do you recollect the date of the agreement with the Gold and Stock Telegraph Company?

Ans. I do not remember the exact date, but it is either in August or September, 1877.

Cross-Int. 28. Do you remember when the specification was drawn up on which your application was made?

Ans. Very soon after the agreement with the Gold and Stock Telegraph Company.

Cross-Int. 29. How long were the negotiations pending which resulted in that agreement?

Ans. Probably not over a month.

Cross-Int. 30. How came you to enter into negotiations with that company?

Ans. I sent a written statement to Mr. Orton concerning my invention, and it was the result of that.

Cross-Int. 31. Who acted as your solicitor in preparing the specification and making the application for the patent?

Ans. Mr. F. L. Pope.

Cross-Int. 32. Did he do this in the employment of the Gold and Stock Telegraph Company?

Ans. He did.

Cross-Int. 33. In speaking of the instrument which Mr. Stetson commenced making for you, I understand that he attached or was to attach the plate of iron, which served as an armature, to the electro-magnet, to a stretched membrane. Was this so?

Ans. Mr. Stetson never made or attempted to make any instrument for me in which an electro-magnet was used.

Cross-Int. 34. Was the plate of iron, in the instrument which he commenced, attached to a stretched membrane?

Ans. He made two; one was attached to a membrane, and the other without it.

Cross-Int. 35. In both, the plate of iron was placed in front of the poles of a permanent magnet having coils around the two extremities, was it not?

Ans. I do not understand the question in the form in which it is put. If you mean by poles the two poles of a single magnet, I then say that he used the plate of iron in front of one pole of a permanent magnet, about which was a coil of wire. He did not make any instrument employing both poles of the magnet.

Cross-Int. 36. He made use of a straight bar magnet, if I understand you?

Ans. Straight bar magnet.

Cross-Int. 37. Would the action of instruments made in these

3079

two ways be the same in taking up the sounds at the transmitting instrument, inducing a current of electricity between the receiving and transmitting instruments, and reproducing the sound at the receiving instrument? I mean made with a plate attached to the membrane or with a plate unattached to the membrane.

Ans. I couldn't answer a question put in that way, because I do not understand that there is any electricity generated between the transmitting and receiving instruments.

Cross-Int. 38. Will you explain, then, in what way you understand both these forms of apparatus would act in taking up the sound at one instrument and reproducing it at the other; and if there would be any difference between the two instruments in performing this service, will you state what it is?

Ans. I do not suppose you want me to give an exposition of the complete actions within the telephone circuit, but if I understand the question I will say that the electricity is generated within the transmitter, and not between it and the other instrument, and as this generated electricity has its origin primarily from sound vibrations acting upon an inductive substance, the action of a plate, and of an armature glued to a membrane are precisely alike, the difference between them being simply of greater or less efficiency.

Cross-Int. 39. Is there any difference in these two forms in their action as receiving instruments?

Ans. There is no difference, except for efficiency, as in the former case.

Cross-Int. 40. Will you look at the paper, and drawings annexed to it, which I now hand you, and state whether it appears to be a copy of your specification and drawings, of the application for your patent referred to in your direct examination?

Ans. It appears to be a copy.

[*Complainants' counsel offers the paper in evidence, including the file wrapper, which is marked,* "*Complainants' Exhibit No.* 14, *Dolbear's Application, J. H. T., Special Examiner.*"]

[*Adjourned* to 1.45 *P. M.*]

1.45 P. M., *resumed.*

Cross-Int. 41. You say that "Mr. Stetson never made or attempted to make an instrument for me in which an electro-magnet

3080

was used." I suppose you mean by an electro-magnet, a coil of wire or helix, forming part of an electric circuit, and surrounding a bar of soft iron?

Ans. No, I don't mean quite that; I don't consider that for an electro-magnet it is necessary for it to be in circuit; it is not customory so to speak of it.

Cross-Int. 42. What do you consider an electro-magnet to be?

Ans. I consider an electro-magnet to consist of a rod of soft iron with not more than say, one per cent of carbon in it, surrounded by one or more turns of insulated wire. In this form it is a possible electro-magnet, and in ordinary speech, we would speak of it as an electro-magnet.

Cross-Int. 43. When did you first make instruments to be used for transmitting sounds in the way they are in the speaking telephone, in which you used an electro-magnet in combination with a plate of iron held by its edge, or attached to a stretched membrane?

Ans. The first time I ever did anything of the sort was some time in 1877.

Cross-Int. 44. Will you give me the time as nearly as you can?

Ans. It may have been in February, or in March, 1877.

Cross-Int. 45. You do not refer to the instrument which you have produced in evidence, I suppose?

Ans. I do not.

Cross-Int. 46. In that instrument having an electro-magnet, in which way did you use the plate, — by attaching it to a stretched membrane, or by fastening the edge of the plate to some support?

Ans. Fastening it, as in the instrument produced.

Cross-Int. 47. Would such an instrument be embraced within the meaning of the first claim of your application, as you understand it?

Ans. I should think it would.

Cross-Int. 48. Do you think that form of the invention which is the subject of that claim was made by you as early as February or March, 1877?

Ans. Yes.

Cross-Int. 49. When, as you understand it, did you make the invention which is the subject matter of the third claim?

3081

Ans. As early as October, 1876.

Cross-Int. 50. Will you answer the same question in respect to the second claim, and that part of the first claim which relates to a permanent magnet?

Ans. I first employed the iron poles in combination with permanent magnets to adapt the commercial magnets to the purpose of telephony probably in March, 1877. To the second part of the question, I say that the invention was made in September, 1876.

Cross-Int. 51. When you say you made these inventions in September, 1876, do you mean that you constructed instruments embracing them, or that you simply formed the conception of them at that time?

Ans. The conception was reduced to writing and a drawing on Sept. 20, 1876, and orders were given for construction within a few days of that date.

Cross-Int. 52. That writing and drawing is the one referred to and produced in your direct examination?

Ans. Yes, sir.

Cross-Int. 53. Now will you state when you made the inventions referred to in the fourth and fifth claims, distinguishing between the time when you formed the conception of them, and when you made instruments embracing the features contained in the claims?

Ans. I suppose the fourth claim refers to the rounded form of the poles. That was made at the same time I adapted the commercial magnets to this use, which was in February or March, 1877. The fifth claim I cannot say whether it was in February or March, 1877.

Cross-Int. 54. You published a book in 1877, entitled "The Telephone," did you not?

Ans. I did.

Cross-Int. 55. In that book, on page 124, I find a passage referring, as I understand it, to the use of the speaking telephone, which is as follows: "It is noticeable that low talking can be heard more distinctly than when a great effort is made; but the sounds though distinct are not strong at any time, and other sounds seriously interfere with hearing." Was this statement made as the result of your observations in the use of telephones?

[*Objected to as not open on cross examination.*]

Ans. It was the result of my own observations; also the experiences of others which I heard or read of.

Cross-Int. 56. Will you look at a letter which I now show you, and state whether you wrote it; and if so, in what year and whether you sent it to Professor Bell at the time it was written?

Ans. Yes, sir, I wrote this letter to him, I think, in February, 1877. I forget whether I sent it to him by mail or took it to him at that time.

Cross-Int. 57. The letter bears date Feb. 16. Is that the day of the month on which it is written?

Ans. Probably was.

Cross-Int. 58. Will you read this letter, to be taken down as a part of your deposition?

Ans. Yes. It is as follows: —

"COLLEGE HILL, MASS., Feb. 16.

"PROF. A. G. BELL:

"*Dear Sir*, — The other day I visited your room at Exeter Place, and was kindly shown your invention, the telephone, by Mr. Watson. He mentioned having sent messages through three persons holding hands, but didn't know the resistance of such a circuit. I promised to measure the resistance of the human body in a circuit and send it to you, as he thought it would be useful, and gave to me one of your envelopes.

"The following is my result, deduced from measures of 8 persons.

RESISTANCE IN OHMS, AN AVERAGE OF 8 INDIVIDUALS.

From one hand to the other through the body,	hands dry,	10,000+
	hands wet,	6,000
From mouth to hand,	latter dry	8,000
	" wet	5,000

"You will notice that I put them all in *round* numbers, but the experiments justify it. There was a wonderful difference in individuals, which surprised me at first. One person having a resistance upwards of 40,000 ohms. I perceived that the reason was the

3083

difference in thickness and horniness of the inner skin of the hands. Hence, I conclude that you sent your message through a resistance of at least 18,000 ohms, nearly equal to the resistance of 2,000 miles of ordinary telegraph wire. I congratulate you, sir, upon your very great invention, and I hope to see it supplant all forms of existing telegraphs, and that you will be successful in obtaining the wealth and the honor which is your due.

"Yours truly,

"A. E. DOLBEAR."

Cross-Int. 59. What was the "very great invention" on which you congratulated Professor Bell in the last paragraph of the letter?

Ans. It was the invention which he said he had patented two years before.

Cross-Int. 60. What did you understand the invention to be?

Ans. A speaking telephone, embodying the principles of magneto-electricity, as then represented in his instrument, and which I supposed had then been developed in a satisfactory way.

Cross-Int. 61. You had, as appears by the letter, been to Professor Bell's rooms, and seen his invention of the telephone. Is that so?

Ans. I had.

Cross-Int. 62. Will you look at another letter which I now show you, and say whether you wrote that and sent it to Professor Bell at the time it bears date?

Ans. I did.

Cross-Int. 63. Will you read this letter, to be made a part of your deposition?

Ans. I will. It is as follows: —

"COLLEGE HILL, MASS., May 6th, 1877.

"PROF. A. G. BELL,

"*My Dear Sir*, — I listened with pleasure to your lecture at Music Hall, last friday night, but as I understood you to say concerning the latest forms of the Telephone that you were without a competitor, I wish to acquaint you with my connection with this invention, and I hope you will patiently listen to me through a short story.

3084

"As long ago as *June*, 1864, while studying electricity at college, and also employed by the prof. of Nat. Science to make some magnets both electro & permanent, I invented substantially this present arrangement and described it to the prof., to the telegraph operator at the place, and endeavered to interest some parties in it, so as to undertake the construction of working instruments. They were all skeptical, and as I had no funds or means beyond those for my college expenses, I had to abandon it. Last fall, when reading the remarks of Sir W. Thompson, concerning your invention, I at once thought of my former one, & at once began some experiments which resulted in this present form of the Telephone, such as you use; that is, the inducing permanent magnet and the vibrating plate. This was early in Dec. last. I had not the slightest idea that you were at work on the same line. After I had succeeded in this, I thought of *visiting you and saying to you that what you were doing with* a battery could be as well done without a battery, but my friends persuaded me to keep away from you, to perfect a pair of instruments and obtain a patent for them; this I was doing when your invention of the same thing was made public. I have looked over the patent files and noted that your application dates Jan. 15th, and that the patent was granted on the 30th of that month. To me it appears that I had invented this form while you were yet experimenting with the battery, as for instance between Cambridgeport & Boston, Malden & B., etc.

"There are a plenty of persons here who know about these things and can test fy that they all preceded any mention of your experiments in the same direction. This, I think, entitles me to at least an equal claim with yourself to this latest form of the Telephone.

"I did at one time seriously think of contesting your patent, but I learned that it was always a costly thing and I hadn't a cent to spend for any such purpose, therefore I beg you not to be uneasy in the slightest degree as to your claim.

"*I shall not interfere.* All I would ask of you will be that while giving the work of others upon the subject, you will not entirely ignore me.

"It is the commonest thing in the world for two or more persons to hit upon the same idea, at the same time, without any knowledge of

each other's work, and the history of telegraphy abounds in such incidents, as you know.

"This is all I have to say about that matter, and if you will allow me to correct a statement I understood you to make concerning the effect of magnetization upon a piece of iron.

"I understood you to say that when a piece of iron was magnetized that it was *shortened*.

"It should be *lengthened*. Joule made its increase in length to be about the $\frac{1}{27000}$ of its own length. Mayer, in 1872, made it the $\frac{1}{25000}$ for soft iron. In 1871, I also measured it, using a tilted beam of light 60 ft. long, and also made it $\frac{1}{25000}$ of its length. For *hardened steel* I believe that it is shortened.

"Now, my dear sir, I hope that you will not feel any way but kindly towards me, as I admire both your wonderful ingenuity and persistence, and I would love to count you as one of my friends.

"I hope that you will yet be able to make the Telephone even to surpass the vision of the wild "Graphic" man, and that you will meet both Fame & Fortune.

"Yours truly,

"A. E. DOLBEAR."

Cross-Int. 64. The letter bears date May 6, 1877, and in it I find this passage: "I did at one time seriously think of contesting your patent, but I learned it was always a costly thing, and I hadn't a cent to spend for any such purpose, therefore I beg you not to be uneasy in the slightest degree as to your claim. I shall not interfere." What patent was it that you thought seriously at one time of contesting?

Ans. The speaking telephone constructed with permanent magnets, and involving the principles which I have said that I invented in September, 1876.

Cross-Int. 65. The one for which application was made in January, 1877, and granted in that month and referred to in the previous part of your letter, was it not?

Ans. I don't remember all of the specifications of that patent of Mr. Bell's, but I think that in the eighth claim of patent 186,787, dated Jan. 30, 1877, is embodied the invention concerning which I was speaking.

Cross-Int. 66. At what time was it that you seriously thought of contesting that patent?

Ans. It was the last of February or first of March, 1877, that is to say, as soon as I learned that the patent was granted to Professor Bell, after the date when I understood he had said it had been granted to him.

Cross-Int. 67. In this letter of May 6, in the passage I have quoted, you say, "I shall not interfere," underscoring the words. How long after this was it that you made up your mind that you would interfere?

Ans. That letter was a protest to Mr. Bell against a statement made by him that he was without any competitor, and I hoped that in his public utterances he would speak of my claims when he was made aware of them. He not only did not do that, but he reiterated his former statement concerning the matter of competition in invention, and my only chance of recognition was to maintain my rights in this way. In a very few weeks, when the reports of Professor Bell's utterances reached me, I made up my mind to apply for a patent.

Cross-Int. 68. Did you have any interview with Professor Bell after you wrote that letter, with reference to the dates respectively when you each made the inventions?

Ans. I did.

Cross-Int. 69. When did such interview or interviews take place, and where?

Ans. It was some time in July. I think it was in July, just before Professor Bell's departure for Europe, and at the house of Mr. Gardiner G. Hubbard, of Cambridge.

Cross-Int. 70. Did you, at that interview, give Mr. Bell the date at which you had the first conception of the invention and made the record and drawing which you have referred to, the date when you commenced the construction of the first instruments you made, and the time when you completed them?

Ans. I think that I told Professor Bell of the date of my original invention. Whether or not I told him about the time of construction I cannot say; I don't remember of telling him about that.

Cross-Int. 71. Did not Professor Bell claim that he had con-

3087

ceived the inventions long before you had, and had put them into practical use before you made any attempt to construct them?

Ans. Professor Bell did not give to me the date of any of his inventions or constructions.

Cross-Int. 72. My question was not whether Professor Bell gave you the dates when he did the things inquired about, but whether he did not claim that he did them before you did?

Ans. His claim was, as I remember it, that his patent of April, 1876, — I think it was April, 1876, — covered all the points involved between us.

Cross-Int. 73. Wasn't the use of the permanent magnet as a substitute for the electro-magnet and battery, and the use of a plate of iron instead of a stretched membrane and an armature attached to it, talked about at that interview?

Ans. The subject of the permanent magnet *versus* the electro-magnet was, and he distinctly maintained that his prior patent would prevent me, or would have prevented me, from obtaining a patent upon the device if it had been put in the Patent Office before January, 1877. I have no recollection of any conversation about the vibrating armature.

Cross-Int. 74. Didn't Professor Bell claim at that interview that he conceived the use of the permanent magnet instead of the electro-magnet before you did, and also that he had actually used it before you did?

Ans. Concerning the conception, it is likely he did claim that. He has claimed in every case everything that would cover the case.

Cross-Int. 75. Wasn't there anything said about the time when he first used the permanent magnet instead of the electro-magnet, or about his having used it before you did?

Ans. There was nothing said about the time. Very much was said about the permanent magnet, but nothing that I remember concerning the permanent magnet as a substitute for the electro-magnet and battery.

Cross-Int. 76. What was it that was said about the permanent magnet?

Ans. That he had used the permanent magnet in constructing telephones. Gave no indication how it was used.

3088

Cross-Int. 77. Didn't he claim that he had used it before you did?

Ans. He did not, as a substitute for the electro-magnet.

Cross-Int. 78. Wasn't there any reference made to his patent of January, 1877, with reference to the permanent magnet?

Ans. I do not remember any specific matters concerning it.

Cross-Int. 79. Do you mean to be understood that it wasn't referred to at all?

Ans. I have no recollection of anything important concerning that patent by Professor Bell.

Cross-Int. 80. Was any reference made to it at that interview by anybody else, and if so, by whom?

Ans. I think I must have made reference to the matter, — that patent, — and I think I asked Professor Bell at the time what the patent embodied.

Cross-Int. 81. Didn't you know what it embodied? Hadn't you seen it?

Ans. I had seen it, but I had not seen the former patent to which he referred.

Cross-Int. 82. You understood, then, that there was a claim in the patent for the use of a permanent magnet, did you not?

Ans. Yes, I did.

Cross-Int. 83. And you claimed that you had invented what was described and claimed in that patent, with respect to the use of a permanent magnet, did you not?

Ans. Yes. I don't like the way that question is put. That patent embodies a claim of mine, for *a* certain use of a permanent magnet.

Cross-Int. 84. Didn't Mr. Bell claim, at that interview, that he was the first inventor of the same thing?

Ans. He has never failed to claim that in any place, where he has ever spoke.

Cross-Int. 85. Well, he did claim it, then and there, did he not?

Ans. Here are two questions involved in this, — one involving the use of a permanent magnet in a speaking telephone, and another the use of a permanent magnet in certain relations in a speaking tele-

3089

phone. The former of these were the claims spoken of by Professor Bell, while the latter claim was not mentioned.

Cross-Int. 86. In your answer to the eighty-third cross interrogatory you say, referring to the patent of January, 1877, "That patent embodies a claim of mine for a certain use of a permanent magnet." Did not Mr. Bell claim that he had invented the same thing before you did?

Ans. I have no recollection of any such claim.

Cross-Int. 87. Who was present at that interview besides yourself and Mr. Bell?

Ans. Mr. Gardiner G. Hubbard.

Cross-Int. 88. How came the interview to take place?

Ans. I received a letter from Mr. Bell, saying that he was going to England; that he wanted to do justice to all parties; he would therefore like me to call upon him to tell him what I had done or what my claims were.

Cross-Int. 89. Do you mean now to be understood that Mr. Bell said nothing at that interview about having invented before you did, whatever there was described and claimed in the patent of 1877, with reference to the use of the permanent magnet, which you claimed that you had invented?

Ans. I mean to say that Professor Bell's statements to me did not convey to me the impression that the permanent magnet, in the relation in which it was in the patent of 1877, was made by him prior to the time of my claim. He often spoke of the permanent magnet and said that he had used it, but he didn't specify how he had used it.

Cross-Int. 90. You understood that he meant that he had used it in the speaking telephone, did you not?

Ans. I did.

Cross-Int. 91. Didn't you understand that you were discussing the question as to who had first used it or invented it, and who had a right to the invention?

Ans. The permanent magnet in a speaking telephone has been used in two distinct places and with different functions. I knew that Professor Bell had used the permanent magnet in a speaking telephone in one of those relations, and therefore he could speak with

3890

entire propriety of the use of a permanent magnet in a speaking telephone. The other method and function of the permanent magnet, which is the one which I claim to have invented, Professor Bell did not distinctly state that he had invented prior to myself. [*Question being reread to witness, he says:*] There was no discussion of this matter at all. I can give you in a nutshell what I suppose you want, if you will let me put it in my own way, but in answer to such questions as you put, I don't see how I can get at it.

Cross-Int. 92. You can tell me, can you not, whether Mr. Bell claimed at that interview that he invented before you did the things which you there claimed that you had invented?

Ans. He at no time specifically said that.

Cross-Int. 93. What are the two functions of the permanent magnet in the speaking telephone, for one of which you say Mr. Bell had used it, and the other of which I understand that you claimed you had invented?

Ans. The first function was that of an armature to an electro-magnet, the second one to replace the electro-magnet itself.

Cross-Int. 94. In what instrument was it that Mr. Bell used it as the armature of an electro-magnet?

Ans. This [*the witness refers to a passage upon page* 163 *of the printed record, being part of complainants' Exhibit No.* 9] is what I refer to: "When a permanent magnet is caused to vibrate in front of the pole of an electro-magnet, an undulatory or oscillatory current of electricity is induced in the coils of the electro-magnet, and the sounds proceed from the armatures of other electro-magnets placed upon the circuit." There is no mention in this paper of the other function of the permanent magnet to which I have referred, which was presented May 10, 1876. This is the instrument to which I referred.

Cross-Int. 95. In the patent of January, 1877, is not the permanent magnet described and represented as being used for the second of the two functions you spoke of in answer to the ninety-third cross-interrogatory?

Ans. It is.

Cross-Int. 96. Now do you mean to be understood that when at that interview you spoke of the use of the permanent magnet as

3091

your invention, referring to the patent of January, 1877, and Mr. Bell also spoke of the use of the permanent magnet, you then understood him as referring to the use of the permanent magnet in the manner specified in the passage you have quoted?

Ans. Professor Bell's references to his employment of the permanent magnet in the speaking telephone were always evasive on this point.

Cross-Int. 97. I ask you to say what you then understood him to be speaking of when he spoke of the use of the permanent magnet at that interview, and I now repeat, To which one of these two ways of using the permanent magnet did you then understand Professor Bell to refer to?

Ans. I can say a great deal better what I didn't understand him to say, for he nowhere specified what he did mean.

Cross-Int. 98. Please state what you did understand him to say, if you understood him to say anything?

Ans. I understood him to speak of the use of a permanent magnet in the construction of a speaking telephone, but he nowhere said how he had used it. He endeavored to impress upon me that he had used permanent magnets and electro-magnets, and that his patent of March, 1876, covered all possible combinations.

Cross-Int. 99. But the subject of conversation to which you called his attention was the use of the permanent magnet in the manner shown in his patent of 1877, was it not?

Ans. That was what I was talking about.

Cross-Int. 100. Did you, then, understand that he was talking about something else?

Ans. His language could be so interpreted.

Cross-Int. 101. Did you, then, so interpret it?

Ans. I did.

Cross-Int. 102. And did you tell him that he was talking about one thing, and you about another?

Ans. I have already said that we had no debate.

Cross-Int 103. Will you please answer the last question?

Ans. That would have been impossible unless we were in debate.

Cross-Int. 104. You did not, then, understand Mr. Bell, if I

3092

understand you, as saying anything about what was claimed in the patent of 1877, in respect to the use of the permanent magnet, either as to the time when he first conceived of it or the time when he first constructed or first used permanent magnets in the manner represented in that patent?

Ans. I remember nothing that he said concerning the time of the invention or construction of a telephone embodying that use of permanent magnets, and do not think that he made any statement that could be so interpreted or that might not be interpreted in another sense.

[*Adjourned to May* 9, 1879, *at* 10.15 A. M.]

MAY 9, 1879, 10.15 *A. M.*

Cross-Int. 105. You may now, if you desire to, put in a nutshell, in your own way, what you said yesterday you could so say.

Ans. My visit to Mr. Bell at Mr. Hubbard's house was by invitation from Mr. Bell, and my object in visiting him and my expectations from the visit were to convince him of the genuineness of my invention, for word had reached me that Professor Bell had looked upon my claims as a blackmailing operation. I also hoped to be able to settle or ascertain the relative date of the invention which I claimed. During our conversation I explicitly said to Professor Bell that I believed if I had applied for a patent for the device, consisting of the telephone in the form in which I had it, that is to say, the permanent magnet with its vibrating plate armature, before the first of January, 1877, I should have received the patent. He declared that his prior patents covered the case, at which I again affirmed that if I had applied for a patent for those features, which were embodied in the speaking telephone as it then was, I should have received a patent, to which he replied, "Yes, you might." I therefore went away from Professor Bell's, called upon a friend in Cambridge, and told him precisely that. I afterwards went home and stated the same thing to my family. As the result of this, there was some correspondence between Mr. Gardiner G. Hubbard and myself.

Cross-Int. 106. Who was the friend in Cambridge to whom you related this conversation?

Ans. Professor John W. White.

3093

Cross-Int. 107. When you speak of "settling the relative dates of the invention," you mean, I suppose, the relative dates as between yourself and Professor Bell?

Ans. I mean the relative dates as between Professor Bell and myself of the adoption in a speaking telephone of permanent magnets, as substitutes for the electro-magnets, in combination with the ordinary inductive vibrator.

Cross-Int. 108. Did you have any conversation at that interview with Professor Bell about the substitution of an iron plate in the speaking telephone for the stretched membrane with an armature attached to it?

Ans. I do not remember any special talk about it. That to me never seemed an essential matter.

Direct Examination resumed.

Int. 109. In your letter of Feb. 16, 1877, to Professor Bell, you say: "The other day I visited your room, at Exeter Place, and was kindly shown your invention, the telephone, by Mr. Watson." Will you describe the apparatus you here refer to as having been seen by you at Mr. Bell's room?

Ans. So far as I remember that case, it consisted of a U-formed, permanent magnet of a single piece, nine or ten inches long, about the poles of which were some rather short coils of wire, in front of which was the diaphragm. Whether the latter was inclosed or not, I do not remember. In front was a short speaking tube or air chamber into which speaking was directed and to which the ear might be applied to hear sounds. This was connected by wires to some distant room.

Int. 110. What diaphragm did the apparatus have, — a stretched membrane carrying an armature or a metallic diaphragm?

Ans. I have not a distinct remembrance of the form of the diaphragm, but my impression is that it consisted of an entire piece of iron.

Int. 111. In your cross examination this morning, you stated that your interview with Professor Bell and Mr. Gardiner G. Hubbard was followed by correspondence between Mr. Hubbard and yourself.

3094

Have you with you the letters of Mr. Hubbard, and copies of your replies, constituting this correspondence?

Ans. I have.

Int. 112. Will you please produce them, and read them to the examiner to be recorded as part of your deposition?

Ans. I will. They are as follows: —

"AUGUST 1, 1877.

"HON. GARDINER G. HUBBARD:

"*Sir*, — Since the conference that I had with Prof. Bell upon our mutual relations to the Telephone, which we held in your presence, I have been looking for some communication from you upon the matter, for I thought that I convinced Prof. Bell that I had invented the Speaking Telephone *ab initio*, entirely independent of him and moreover that the special form of it which he now uses, namely the vibrating inducing plate in front of a fixed permanent magnet, antedated his invention of the same thing by considerable time.

"I believe myself to be the original inventor of the speaking telephone as it now is, and therefore believe myself to be entitled to the profits accruing from its public use. I have consulted some of the best electricians I know, among them Mr. Moses G. Farmer of Newport, and get but one kind of advice. I also have good counsel and some parties in Boston that are somewhat anxious to test the validity of the last patent (that of Jan. 30, 1877). Now I do not like that way of settling a controversy. Besides being costly, sometimes protracted, it is not conducive to good feeling, and hope that my course meets your approval. I therefore ask you if in all fairness you will not concede to me a share in the profits of this invention?

"At the request of Messrs. Lee & Shepard, publishers of Boston, I have written a small treatise upon the subject of telephony and it is now in press and will probably be issued in about ten days.

"I have endeavored in this book to give full credit to Prof. Bell for his invention, and have described with drawings his apparatus, including his device patented January 30, 1877.

"All the facts in relation to the claims of Prof. Bell, and also my own, will thus come before the public and become well known to purchasers of telephones.

AMERICAN BELL TELEPHONE COMPANY, -14

3095

"I think it will then be perceived that my rights are equal to those of Prof. Bell and this must diminish the sale under that patent.

"I hope that there is nothing that I have said that will look to you like any immoral attempt. I only ask for what I consider to belong to me justly. What I have written has been read by my attorney, and meets his approval.

"May I not hear from you upon this matter? You may address me at College Hill, Mass., or Mr. John M. Batchelder, No. 3, Div. Avenue, Cambridge.

[Signed] "A. E. DOLBEAR."

To this I received the following reply: —

"CAMBRIDGE, Aug. 5, 1877.

"PROF. DOLBEAR:

"*Dear Sir*, — Your favor of the first inst. was duly received, but I have been too constantly occupied to answer it sooner.

"Prof. Bell was much interested in the account of your researches in Telephony, which you gave at my house, four weeks ago to-day. He intended to accept your invitation to call and see the instruments you had made, but was prevented by his marriage, and absence from the city, and after his return by constant engagements until Friday last, when he left Boston for England.

"When you and Mr. Bell compared notes at that interview, I distinctly understood you to state, that while you had reflected upon the subject of Telephony, you did not construct a single working Telephone until after Mr. Bell had made and used them without a battery; that you had no intention therefore of applying for a patent, and only desired to receive due credit as an original inventor. I am perfectly sure that at this interview you admitted that Mr. Bell was the original inventor. I so stated to my family immediately after you left, as did Mr. Bell.

"It is, I think, impossible that I can be mistaken, and am therefore naturally surprised at the contents of your note, which contradicts both of your statements, and leaves me entirely in doubt as to what I should believe.

"Mr. Bell believes he is the Inventor of the Telephone, and justly regards that fact as more to be desired than any pecuniary return

he can receive from his patents. But highly as he prizes that honor, he would not detract anything from another, and whenever he is convinced that you are the prior inventor, and that your researches were made without knowledge of his many publications upon the subject, will be the first to do you justice.

"I am yours truly,

[Signed] "GARDINER G. HUBBARD."

I also received a few days later from Mr. Hubbard the following: —

"CAMBRIDGE, Aug. 9.

"PROF. DOLBEAR:

"*Dear Sir*, — I understand from a copy of your note to Mr. Richards of July 31, and from your letter to me of August 1, that you *now* claim to be the first Inventor of the Telephone, and that you intend to test the validity of Mr. Bell's patent.

"You have a perfect right to make an application to the Patent Office as the original inventor, and I shall be very glad to have you do so, as then your claim will be judicially settled.

"I also understand that you intend to publish a work on The Telephone, and in that to claim the credit of being the original inventor; this is a very different matter. Such a claim, even if made through ignorance and in perfect good faith, might be an injury to Mr. Bell, for which no adequate atonement could be made.

"You ought not, therefore, in justice to him or to yourself, to publish such a statement until you have made full enquiries as to the claims of Mr. Bell; and if they conflict with yours, then the claims of each should be clearly and distinctly made, and by some one else than the party directly interested, so that the public can judge. Prof. Bell at the interview with you at my house, after he had heard your claim, distinctly stated that he was the first and original inventor, and this I understood you to admit. Since then, I have made enquiries of other parties, and as the result of these investigations, I distinctly state to you that, admitting you transmitted articulate speech by the telephone without a battery at the time you then stated you first conceived the idea, Mr. Bell is the original inventor,

3091

as telephones were made and used by him without a battery, prior to that time.

"After this notice I cannot think you will claim in your book the merit of being the original inventor, without a full and careful investigation, for you would thereby do greater injustice to yourself than even to Prof. Bell.

"I shall be glad to submit the whole matter to Dr. Miner, or any other impartial man, and to be guided by his advice.

"I am yours truly,

[Signed] "GARDINER G. HUBBARD."

To these two letters I wrote the following reply:—

"COLLEGE HILL, MASS., Aug. 10.

"HON. GARDINER G. HUBBARD:

"*Dear Sir*,—Your letter of the 5th instant, and also the one of the 9th, have both been received. Let me say in reply, that I gather from them that you have the impression that I had abandoned the idea of having invented the telephone, but that I am *now* reasserting my claim. This is a mistake. As to the interview at your house, I went away from there with the statement of Prof. Bell, that I had invented the apparatus independent of him, and also that if I had applied for a patent for the *present form* of it, before Jan. 15, 1877, I should likely have had the patent. I told this to my family as soon as I got home. Again, immediately after Prof. Bell's first lecture in Boston last April, I wrote a letter to him, contradicting his assertion that he was without any competitor in that invention; he, nevertheless, made the same assertion the next week in New York City, without taking the least pains to ascertain whether he was right or not.

"Now I want this matter settled as impartially as it can be done, and I will meet you half way in any feasible plan, and would hasten to avail myself of the suggestion at the close of your letter, namely, to submit it to some impartial parties, only provided that the parties should be *experts* in electricity. I would suggest that such committee be made up of *three* persons, all of them to be skilled in he sciences of electricity and magnetism. I will appoint one, you

the second, and the two to choose a third. I will submit my whole case to such a committee, and will agree to abide by their judgment of our mutual rights, and to the position each should hold with reference to this invention.

"As for the book on Telephony, it is now all printed, and only awaits binding. Whatever is done must be done soon, as the publishers are anxious to meet the present demand for it.

[Signed] "A. E. DOLBEAR."

To this I received the following reply: —

"CAMBRIDGE, Aug. 14, 1877.

"PROF. DOLBEAR,

"*Dear Sir*, — Your favor of the inst. is duly received. It would be impossible for me, if I were so inclined, in the absence of Mr. Bell, to arrange such a reference as you propose.

"My appeal was to you as a professional gentleman, not to publish anything in regard to to the respective dates of your and Mr. Bell's invention of the telephone, until you knew the whole case.

"If you feel that Mr. Bell, acting under my advice, injured you by not referring to your invention in his lectures, you will understand what his feelings under similar circumstances will be.

"It is useless for us to continue this correspondence, but perhaps another interview might be of service to each of us. In that case I will meet you either alone or in company with a friend as you may prefer.

"I am yours truly,

[Signed] "GARDINER G. HUBBARD."

This ended the correspondence.

Int. 113. It may be inferred from some expressions in the letters of Mr. Hubbard that you have just read that the question you had made with Professor Bell was the question which of you two first invented or made a speaking telephone. Did you, in your interview with Professor Bell, dispute that, as between him and you, he had been the first to make a speaking telephone, such prior telephone of his being made with electro-magnets, as distinguished from permanent magnets?

3099

Ans. I did not.

Int. 114. Have you present this morning the agreement between yourself and the Gold and Stock Telegraph Company, to which you referred yesterday, and if so, will you produce it?

Ans. I have, and produce it.

[*A copy of the agreement is put in evidence for the defendant, and marked "Defendant's Exhibit Dolbear Agreement, J. H. T., Special Examiner."*]

AMOS EMERSON DOLBEAR.

Attest: J. HENRY TAYLOR, *Special Examiner.*

Page 314 of Record.

DEFENDANT'S EXHIBIT DOLBEAR AGREEMENT, J. H. T., SPECIAL EXAMINER.

This agreement, made and executed the sixth day of September, 1877, by and between the Gold and Stock Telegraph Company, a corporation duly established in the city, county and state of New York, and Amos E. Dolbear, of Somerville in the county of Middlesex, and commonwealth of Massachusetts:

Witnesseth: that whereas the said Dolbear has made certain investigations and experiments in telegraphy and acoustics, with a view to the construction of a telephone, and telephonic apparatus, especially as adapted to vocal communication, and claims to have made certain valuable inventions and improvements therein, to secure which by Letters Patent he is about to make application to the Commissioner of Patents of the United States, and

Whereas he is desirous of prosecuting still further his investigations and experiments in the same sciences, and in the mechanism calculated to make inventions and improvements therein of greater practical utility and value, and

Whereas, the better to enable him to accomplish each and all the purposes aforesaid, he desires to secure the aid and co-operation of said Gold and Stock Telegraph Company, and to profit by its greater experience and opportunity to put such inventions and improvement to a practical use; and

Whereas said Telegraph Company is disposed to aid and co-operate with said Dolbear in furthering the plans and purposes aforesaid upon the conditions and under the stipulations hereinafter set forth;

Now, Therefore the said parties each in consideration of the promises and agreements of the other, and of one dollar to each in hand paid by the other, do severally promise and agree as follows, namely:

The said Dolbear agrees that he will forthwith make and execute in proper form, an application, or applications to the Commissioner of Patents of the United States, setting forth his said inventions or improvements in telephony and telephonic apparatus, and the claims to Letters Patent which he bases thereon, and praying that said Letters Patent may be issued therefor to him, or to the said Gold and Stock Telegraph Company as his sole assignee of the same; and he further agrees that he will forthwith by proper instrument or instruments properly executed, sell, assign and convey to said Telegraph Company the full and entire interest, title and ownership in said inventions and improvements, and in any patent or patents which may have been, or may hereafter be granted to him therefor, or for which he has made or shall hereafter make, application, also that he will, with all proper diligence, pursue and prosecute his investigations and experiments in the sciences of telegraphy and acoustics, as applicable to the construction and perfecting of a telephone or telephones, and of telephonic apparatus employing such scientific or mechanical assistance therein as shall be deemed most advantageous for the mutual interests of himself and said Telegraph Company: all future inventions or improvements in the sciences aforesaid, and in the aforesaid application of the same, which shall be made by said Dolbear, shall be deemed to have been made for, and shall belong to the said Gold and Stock Telegraph Company, upon the agreements and stipulations of said Company, hereinafter set forth: and said Dolbear hereby further agrees that he will, as fast as new inventions or improvements shall be made, promptly file in the Patent Office of the United States, sufficient caveats to protect the same, and will thereafter duly and promptly file his application or applications for Letters Patent thereon, and for all reissues thereof, with request, if so desired by said Tele-

3101

graph Company that such patents be issued to said company as sole assignee of the same, and he further agrees that he will employ in all applications for patents, or business connected with the procuring of patents, and in the prosecution or defence of any and all suits or other legal proceedings growing out of, or connected with his said inventions or improvements, and the use of the same, or any infringement of patents granted thereon, such attorney or attorneys, as shall, from time to time, be nominated to him in writing by said Telegraph Company, and will make, execute and deliver to such attorney or attorneys all necessary letters of attorney or authority, with power of substitution and revocation, as he may be in writing requested by said Telegraph Company to make, and that he will revoke the same on similar request; all costs and expenses of such application, legal proceedings and other business, to be paid and borne by said Telegraph Company as hereinafter stated, and the said Dolbear further agrees that he will, at all times hereafter and from time to time, make, execute, and deliver to said Telegraph Company, such other and further caveats, applications for patents, and for the reissue or extension of the same, assignments, letters of attorney, or other instruments, and do all such other acts and things as shall from time to time be necessary or desirable to protect and secure by Letters Patent his said past and future inventions and improvements and to vest the same in said Telegraph Company as sole assignee thereof.

And the said Gold and Stock Telegraph Company agrees on its part, that it will pay all the necessary expenses of procuring any patent or patents, and all reissues and extensions of the same (including the cost of filing caveats to protect uncompleted inventions) which may be granted for inventions or improvements in telephony or telephonic apparatus heretofore made, or which may be hereafter made by said Dolbear as hereinbefore recited, also the costs and expenses incident to the making of all assignments, letters of attorney, and other instruments, necessary or proper to be made as aforesaid, for the purpose of vesting the entire title, interest and ownership in the inventions and improvements made, or which may hereafter be made by said Dolbear as aforesaid in said company; also that it will defray and bear all costs, counsel fees, and other expenses of what-

ever nature, which may be incurred in prosecuting or defending any suits or other legal proceedings growing out of, or connected with said inventions or improvements and the use of the same, or any infringement of patents granted thereon, provided that the same shall have been prosecuted or defended by its orders or with its consent; and said Telegraph Company further agrees that it will use its best endeavors to introduce the inventions and improvements made or to be made by said Dolbear in pursuance of this agreement into public use, and by sale, rental, royalties or otherwise to derive a revenue therefrom; that it will keep an accurate account of all the revenues so received by it, and of all the expenses, costs and disbursements which it may incur or make under the terms of this contract, and after deducting the amount of such expenses, costs and disbursements from such revenues, that it will pay over to said Dolbear, his legal representatives or assigns, once in every three months, one third of the balance remaining, being one third of the net profits of said business; the books of account of said company, so far as relates to the receipts and disbursements of said business, together with all vouchers authenticating the same, shall at all reasonable times be open to the inspection of said Dolbear at the office of said company in the city of New York; and a transcript or summary of said accounts shall be made and delivered to said Dolbear, his legal representatives or assigns, at the time when each payment of profit is due.

And the said Telegraph Company further agrees that to enable said Dolbear to prosecute his investigations and experiments as aforesaid, it will pay to him or upon his order weekly the sum of twenty-five dollars, such payments to continue until the same shall be terminated by one month's notice given or sent to him by said company in writing, and such payments are not to be included in the expenses, costs and disbursements chargeable to said business as aforesaid.

In case any difference shall arise between the said Telegraph Company and the said Dolbear as to the interpretation of this agreement or the due performance of its several stipulations by them or either of them, such differences shall on the written application of either party to the other be referred to the arbitration of three com-

3103

petent and disinterested men, one to be chosen by each party and the third by two so chosen, and the decision of said arbitrators or of a major part of them shall be final and obligatory upon said parties.

IN WITNESS WHEREOF, the said Gold and Stock Telegraph Company has caused its corporate seal to be affixed to this agreement, and the same to be signed by its vice-president, and the said Dolbear has hereunto affixed his signature the day and year first above written.

[Seal of Gold & Stock Tel. Co.] THE GOLD AND STOCK TELEGRAPH CO.
By GEORGE WALKER, V. P.
A. E. DOLBEAR.

Attest:
JAMES D. REED, Sec.

NEW YORK, May 9, 1879, 12.30 P. M.

DEPOSITION OF FRANK L. POPE.

Direct Examination by CAUSTEN BROWNE, Esq., *of Counsel for Defendant.*

Int. 1. Please state your name, age, residence, and occupation.

Ans. Frank L. Pope; I am thirty-eight years of age; reside in Elizabeth, New Jersey; I am an electrician by occupation, and expert.

Int. 2. Do you hold any regular employment under the Western Union Telegraph Company, or any other telegraph or telegraph machinery company; if so, what is it, and how long have you held it?

Ans. Since 1875 I have been regularly employed by the Western Union and Gold and Stock Telegraph Companies of New York as an expert, my particular business being to examine and report upon the novelty and patentability of the various inventions which are presented to the company for adoption, and to advise the officers of the companies generally upon matters of that character. I have also been since 1873 the engineer and electrician of the Electric Railroad Signal Company, of New York. This last-named company is not in any manner connected with the first two companies mentioned.

Int. 3. What amount of attention have you given to the subject

310

of the speaking telephone and the harmonic telegraph, so called, and what publications, if any, are there of papers or books of your own upon that subject, or upon matters of electrical science and practice generally?

Ans. My attention was first directed specially to the subject of the harmonic telegraph or telephone some time in the autumn of 1875, at the time when Mr. Gray brought his apparatus to New York and exhibited it for some time in the Western Union building, a portion of the apparatus being set up in my room. I was much interested in these experiments, and personally assisted in many of them. I do not know that my attention was directed to the speaking telephone, beyond the occasional notices which I read in the papers, until some time in the summer of 1877. Some time during the summer, being in Boston on business, I saw and talked through a speaking telephone for the first time, and within a short time thereafter, which was in the month of August, 1877, I was directed by Mr. Orton, then president of the Western Union Company, to make a thorough investigation of the whole subject, as far as practicable. I accordingly made such an investigation, and from that time until the present have endeavored to inform myself as completely as possible of everything in relation to the subject of speaking telephones. The only publications I have made on the subject are comprised in a translation of Legat's article on the Reis telephone, which I made with the assistance of Mr. Wm. H. Bok, and which was first published in the "Journal of the Telegraph," Vol. X., page 353, of Dec. 1, 1877, and a paper which was read before the American Electrical Society, at Chicago, on the 12th of December, 1877, published in the first number of the second volume of the society's Journal, and also republished in "The Speaking Telephone," etc., by Prescott, commencing at page 235.

[1.15 *P. M.*, *adjourned to* 2 *P. M.*]

2 P. M., *resumed.*

I may have written for publication other short articles or paragraphs, which I cannot now recall, but the above comprises substantially all I have published upon the subject of telephony. I may mention that in 1867, or thereabouts, I published a book on the

3105

general subject of the electric telegraph, but which contained no reference to anything in the nature of telephonic transmission. In 1876 I contributed an article on the telegraph to "Johnson's American Encyclopædia," which contained some notice of the telephone, so far as developed at that time.

Int. 4. You referred in your last answer to a report which you made by direction of Mr. Orton. Will you state somewhat more fully what directions you received from Mr. Orton, in what manner, to what extent, and with what result you pursued the investigations he directed you to make?

[*Objected to.*]

Ans. The directions which were given me by President Orton were to the best of my recollection entirely verbal. I had before mentioned to him the fact of my having seen and talked through a telephone in Boston (I suppose it to have been a Bell telephone), and it was some days after I had mentioned this to him that he sent for me, and said to me in substance, — I do not pretend to give his exact words, — "I have been looking into this matter of the telephone somewhat, and regard it as a matter likely to be of considerable future importance. If this proves to be the case, it is very necessary that we should have the right to use it; therefore I wish you to make a careful and thorough investigation of the whole subject and ascertain what are the fundamental principles of the invention, and what inventions or patents it will be desirable or necessary for us to acquire the control of in order to be able to use the invention in connection with our business." I accordingly set about this investigation and was engaged in it for two or three months, all the time I could spare from my other duties. I think my report was made in October or November, 1877. It was substantially to the effect that I regarded the fundamental principle of the speaking telephone to be the method of transmitting what are technically termed composite tones; that is to say, the simultaneous transmission of two or any greater number of tones over a single wire without destroying their individuality, and of simultaneously reproducing these tones at the receiving station, — a method which necessarily involved the use of a closed or uninterrupted circuit in the main line, and of a common or universal receiver, capable of

3106

responding with equal facility to tones of every description, whether simple or compound. I stated that, in my opinion, based upon all the facts which I had been able to get hold of, this method was first invented by Elisha Gray, and that therefore I regarded it as most important to obtain control of his inventions and patents. I have reason to suppose that it was in consequence of the recommendations made in this report that an arrangement was afterwards made with the then owners of Mr. Gray's inventions and patents, whereby they were afterwards controlled in the interest of the Western Union and its allied companies.

[*So much of said answer as refers to said report is objected to as incompetent, unless it shall appear that said report was not in writing.*]

Int. 5. Do you remain of the opinion expressed in that report as to what constitutes the fundamental principle of the speaking telephone, and as to where it is to be found described or embodied?

Ans. I do.

Int. 6. At the time you made this investigation, were there existing any business relations, of contract or otherwise, to your knowledge, between Mr. Gray or the parties owning his inventions, on the one hand, and the Western Union Telegraph Company or any parties allied with them, on the other?

Ans. None whatever, so far as I know.

Int. 7. State, if you please, a little more fully what you mean by the function you ascribe to the common or universal receiver, — that it should be capable of responding with equal facility to tones of every description, whether simple or compound. I mean to ask particularly as to the sense in which you use the word "responding.'

Ans. The sound of the human voice, as we hear it, is the effect produced upon our organs of hearing by vibrations set up in the atmosphere. In the case of the human voice, these vibrations are of a very complex character; that is to say, they consist of a great number of different series of simple vibrations, simultaneously coexisting in the atmosphere, and in effect superposed on each other. Now, in order to reproduce the sounds of the human voice, or articulate speech, at a distance, it is necessary to reproduce these complex vibrations in the atmosphere at that point; and if

3107

this can be done, no matter by what mechanical means, the effect produced on the ear of the listener will be precisely the same as if a person was actually speaking in the immediate vicinity. The receiver, which is a general term describing any apparatus which is used for converting what I shall call, for convenience, electrical vibrations into atmospheric vibrations, must necessarily be able to produce in the atmosphere all the necessary vibratory motions, however complex; and to do this, it must be capable of responding to, or being affected by, all the electrical vibrations, however complex. Now, if we can set up, by any means, in the electrical conductor, the proper combinations of simple electrical vibrations or series of vibrations, we can produce articulate speech at the receiving station, provided our receiving instrument responds equally well, mechanically, to all the electrical vibrations.

Int. 8. State, if you please, in which of the apparatuses of Mr. Gray, and his practice therewith, known to you at the time of undertaking this search, you found embodied what you have described as the fundamental principle of the speaking telephone; and state also why you regarded and still regard such apparatus and practice as embodying such fundamental principle, in view of the distinction of fact that in Gray's early apparatus and practice, to which you may refer, composite tones, consisting of several coexisting musical tones, were sent over the line and reproduced at the receiving end; whereas, in the speaking telephone, as commonly so called, articulate speech is uttered at the transmitting station and reproduced audibly at the receiving station.

Ans. The opinion which I expressed in my report was based upon my knowledge of Gray's apparatus, which he had exhibited in 1875, and with which I had myself experimented at that time. I may state here that at the time of making this report I had no knowledge of the caveat which had been filed by Mr. Gray Feb. 14, 1876, and that any question relating to that did not therefore enter into consideration. One of the experiments or exhibitions made in 1875 consisted of the transmission of tunes from a keyboard which formed a sort of electrical organ, or harmonium, by which tunes were reproduced at another point on a common receiver. Each key

of this keyboard, when depressed, transmitted a series of electrical vibrations through the line, and when two or any greater number of keys were depressed simultaneously, each key transmitted its own series of vibrations, these being, as it is technically termed, superposed on each other, and forming a series of compound or resultant vibrations, all of which were faithfully reproduced upon the receiver, giving the effect which is termed in acoustics "quality of tone." It was obvious to me that if a sufficient number of keys were employed that it was theoretically possible to so combine various simple tones as to build up any required composite tone, and that thus any sound whatever might be reproduced. This being the case, the apparatus now known as the speaking telephone appeared to me to be a particular application of the general method which was employed by Mr. Gray, making use of an apparatus adapted to produce the particular character of composite vibrations requisite to reproduce articulate speech. I have no doubt that it would be possible to so arrange and combine a series of keys, as used by Mr. Gray, that articulate words might be produced at a receiving station by a proper manipulation of the keys, although, of course, such a method would have little or no practical value compared with an apparatus in which the transmission is effected by the mechanical action of atmospheric sound waves upon a suitable transmitting apparatus controlling the electrical vibrations. For these reasons I regarded the method of producing composite electrical vibrations in an uninterrupted circuit, acting upon a common receiver, as the essential feature of the articulating telephone, the particular kind of transmitter or of receiver being a matter of secondary importance.

I am confirmed in this opinion by the fact that although, since the date of my making that report, several different transmitters, of a character essentially different from each other, have been devised, and various kinds of receiving instruments — some without diaphragms, some without electro-magnets, yet all possessing a greater or less degree of efficiency — have been produced, yet every system of articulate transmission of which I have any knowledge has embodied the fundamental principles which I have just referred to, and I do not conceive it to be possible, in the present state of knowl-

3109

edge, to devise such a system without building it upon the same foundation, however widely it may differ from existing ones in other respects.

Int. 9. Will you state what is meant, in the science of the electrical transmission of sound, by the expression used by you in a previous answer, an "uninterrupted circuit," and the necessity of such a circuit for such transmission? And point out how, in this respect and for this purpose, it is to be distinguished from an uninterrupted current.

Ans. The term "circuit," in its proper signification, designates the path traversed by a current of electricity between the positive and negative poles of a battery, magneto-electric machine or other source of electricity, and the term "current" applies to the flow of electricity through a circuit; thus we may have an interrupted current in an uninterrupted circuit. An ordinary magneto-electric apparatus when in action affords an example of this, and so does the ordinary medical induction coil when the secondary circuit is complete; but a circuit cannot be interrupted without, at the same time, interrupting the current which is traversing that circuit. The necessity of an uninterrupted circuit for the transmission of composite vibrations arises from the fact that it is often necessary to produce some of the individual vibrations of one series between the individual vibrations of another series. If the *circuit* were interrupted between them, this could not be done; but if the *current* merely is interrupted, while the circuit remains unbroken, no difficulty arises. The arrangement known in telegraphy as a "shunt circuit" is another illustration of the difference between an interrupted *current* and an interrupted *circuit*. If the poles of a battery or other generator of electricity be connected with each other by two separate wires or conductors, one as short as possible and offering very little resistance to the passage of the current, and the other very long and offering a great deal of resistance, the interruption of the circuit of the short wire would cause the current of the battery to flow over the long wire, while the completion of the circuit of the short wire would practically interrupt the current but not the circuit of the long wire.

[*Adjourned to May* 10, 1879, *at* 10 *A. M.*]

MAY 10, 1879, 10 A. M.

Int. 10. When you have an electro-magnet in the closed circuit, how far is the magnetic condition of the magnet dependent upon the amount of electricity on the line wire; or, in other words, if the current upon that circuit be intermitted at rapid intervals, how far is the magnetic condition of the electro-magnet affected by such intermission of the current; and will you please state such explanation of the fact, drawn from your own observation or from general scientific knowledge, as may exist?

Ans. When the coils of an electro-magnet are traversed by a continuous and uniform current of electricity, the development of magnetism, within the ordinary limits practically used in telegraphy, is, other things being equal, directly in proportion to the strength of the current. With an intermittent or vibratory current, another element comes into play, namely that of time. The electrical charge and discharge of a wire of ordinary length is almost instantaneous, and its time is inappreciable by any ordinary mode of measurement, but the magnetic charge and discharge of a piece of iron or steel requires much more time, and the length of time is in many cases sensible and appreciable without the aid of special apparatus. The rapidity of this charge and discharge or magnetization and demagnetization varies with the size and shape of the piece of iron and to a less extent with the strength of the current employed.

It is also affected somewhat by other circumstances not very well understood. The result of this is, that when a series of rapid electrical vibrations or pulsations is made to traverse the coil of an electro-magnet, the iron does not have time to become fully charged during the continuance of each pulsation, nor does it have time to become fully discharged after each pulsation, so that although there is a maximum of magnetism developed during each pulsation and a minimum after each pulsation and before the succeeding one, the magnet never becomes wholly discharged or demagnetized, so that it is possible to keep a piece of soft iron continuously though not uniformly magnetized by the action of an intermittent electric current, and with such a current of a given strength, the average magnetic strength in the soft iron will be greater in proportion to the rapidity of succession of the current vibrations.

3111

Int. 11. You use the expression, "It is possible to keep a piece of soft iron continuously though not uniformly magnetized by the action of an intermittent electric current." Why and under what conditions is it desirable in an electric telephone to have the electro-magnet continuously charged, and is it sufficient practically for such purpose that it be continuously, though not uniformly, charged; and will you further state to what extent variation in the uniformity of the charged condition may exist, without detriment to the practical operation referred to?

Ans. Experience has shown that an electro-magnet, when used for a receiving instrument for rhythmical electrical vibrations, should have its soft iron core in a state of permanent polarization, that is, constantly magnetic, as electrical vibrations of a given strength, when transmitted over the wire, produce a far more powerful effect upon a polarized than upon a non-polarized electro-magnet. It does not appear to be material by what means this state of polarization is produced. It may be accomplished by means of a constant current from a battery placed in the main line, or it may be done by means of a supplementary helix connected with a local battery, or by the use of a permanent steel magnet placed in the vicinity of or in contact with the iron core of the electro-magnet, all three of which methods have been successfully used in practice. I do not know that the reason for this has been made known by any investigator, but my own opinion is that by the polarization of the cores of the magnet its molecules are placed in what may be described as a condition of unstable equilibrium, and when in this condition these are much more quickly and easily affected by electrical vibrations or pulsations passing through the coils than when in their normal condition. The force with which electrical vibrations are reproduced by the receiving instrument depends to some extent upon the greater or less degree of polarization in the iron core of the magnet, although it does not appear from experiment to be proportional thereto. A comparatively slight degree of polarization is usually sufficient for practical purposes. In my last answer, in using the words "continuously though not uniformly charged," I referred to the fact that the magnetic charge in the iron becomes greater during each pulsation and less after each

pulsation, but never disappears altogether, as long as the electrical vibrations continue to traverse the coils, so that the magnetic charge or polarization is continuous though not uniform on account of the vibrations.

Int. 12. Will there exist a degree of polarization of the cores of the electro-magnet, sufficient for the practical purposes of such polarization in the use of the telephone, under any rate of sound vibrations, and corresponding electrical undulations, which is involved in the telephonic transmission of speech? And if you can state any observations of your own, or facts known to you in illustration of your answer, please do so.

Ans. The lowest rate of vibration which will produce a musical tone is said to be about sixteen vibrations per second, if I recollect aright. When electrical pulsations at the rate of say sixteen per second, the intermissions between them in length being equal to the pulsations, are sent through the coils of an electro-magnet, the cores of the magnet will contain a constant magnetic charge of considerable strength, say, one fourth or one fifth what the maximum strength would be with a continuous current, the proportion of the maximum strength being greater as the normal current is stronger. Many type printing telegraphs are operated upon this principle, the detent which controls the impression mechanism being held in place by an armature which is constantly attracted by an electro-magnet, through which intermittent pulsations are being transmitted at the rate of twenty or thirty per second, for moving the type wheel, but which armature drops off and releases the printing mechanism, whenever the type wheel pulsations cease. This is a far lower rate of vibration than is ever practically used in the transmission of musical tones or of articulate speech. Therefore, I say, that with any rate of electrical vibration practically used in telephony, we shall necessarily have a state of constant polarization in the electro-magnet, and one which will be sufficient for practical purposes.

Int. 13. Have you read the answer of Mr. Goodridge, on page 270 of the printed record, being his first answer of May 6, where he describes the transmitting instruments (illustrated by "Defendant's Exhibit Gray's Multiple Transmitter of 1875") constituting the multiple transmitter used in Mr. Gray's demonstrations in New York in

3113

1875, to which you have referred, and explains the manner in which it operated in connection with the closed circuit to throw upon that circuit electrical undulations, answering to the tone of the reed of each transmitter?

Ans. I have.

Int. 14. Do you find Mr. Goodridge's answer as to these matters correct, according to your own recollection of the construction, arrangement and working of that apparatus?

Ans. I believe it to be correct in every particular.

Int. 15. Will you describe all that you saw done in New York in the autumn of 1875, in the way of the multiple transmission of sound by means of the apparatus referred to in Mr. Goodridge's answer, including the receiver used?

Ans. I saw the apparatus operated in three different ways which I distinctly remember. In the first instance a series of reeds, I think four in number, was connected with Morse keys, local batteries, and sections of main battery, in the manner described by Mr. Goodridge in his said first answer, page 271 of the printed record, beginning at the words, "In the use referred to," and ending with the end of the answer. Four receiving instruments were arranged consecutively upon the main line at the receiving station, which was in another room of the same building. These receiving instruments each consisted of an electro-magnet, the armature of which consisted of a tuned ribbon of iron or steel, each one being tuned in unison with one of the transmitters. Each pair of instruments, consisting of a transmitter and its receiver, was tuned to a rate of vibration differing from any of the others. To each receiver was attached a local circuit contact point, the precise construction of which I do not recollect, but which was so arranged as to cause or permit the armature of a common Morse sounder in the local circuit to be attracted whenever the ribbon was thrown into vibration. With this arrangement, four transmitting operators could and did simultaneously send four distinct communications to four receiving operators over one wire without confusion. After experimenting in this way within the building, a trial was made between Boston and New York, the transmitters being in Boston and the receivers in New York. This experiment was entirely satisfactory and successful. I actually parti-

cipated in the experiment as one of the receiving operators. The next experiment was made with the same transmitters arranged in the same manner as before, but a common receiver was used for the four sets of signals. This was placed in the centre of a square table and four operators, one of whom was myself, were ranged around the table. Each separate communication was heard in the form of a continuous tone broken up into different lengths corresponding to the dots and dashes of the telegraphic alphabet. Each operator listened to the particular tone representing his own message, paying no attention to the others. Although frequently all four of the tones were heard simultaneously, yet I recollect that we experienced little or no difficulty in distinguishing the different tones from each other and in reading and copying the communications therefrom. I do not recollect whether this experiment was tried with the transmitters in Boston or in another room in the same building.

The third experiment consisted in the transmission of tunes by means of a keyboard of two octaves arranged upon precisely the same principle, both as regards the construction of the transmitters and their connection with the main and local batteries and the main circuit, as those used in the former experiment. The receiver used in this experiment consisted of a hollow wooden box, having an electro-magnet mounted upon its upper surface, the armature of this magnet being firmly secured to one of its poles, but being not quite in contact with the other pole. The Exhibit Gray's Wooden Sounding Box Magnet Receiver is precisely like the one just described, and I believe it to be the identical instrument. The armature I have referred to was an oblong rectangular bar, such as is now attached to the magnet. Part of the time a revolving drum receiver was used, being the instrument marked "Defendant's Exhibit Gray's Animal Tissue Revolving Plate Receiver." Tunes were transmitted by Mr. Goodridge and accurately reproduced upon each of these receivers, in respect to tone, pitch and quality. I think that other experiments were made, but the ones I have mentioned are the only ones which made a distinct impression upon my mind.

Int. 16. In which of Mr. Gray's patents, if in any, do you first find a description and representation of an apparatus involving what you have heretofore spoken of as the fundamental principle of the

3115

electric telephone, and under what special construction with reference to the receiving of the composite tone sent over the closed circuit?

Ans. I find in defendant's Exhibit Gray's Closed Circuit Patent, No. 186,340, dated Jan. 16, 1877, a method of transmission involving the principle which I term the superposition of electrical vibrations, and which I have before stated was in my opinion the fundamental principle of the speaking telephone; but in this patent, instead of being applied to a common or universal receiver as in the speaking telephone, it is here applied to a series of analyzing receivers, the object of the arrangement described being to separate the tones from each other at the receiving station. This patent describes, in fact, the precise arrangement for the simultaneous transmission of several different communications over one wire, which I have already stated I saw in operation in New York in 1875, being the first in order of the experiments I have described in my last answer. By substituting a common receiver for the analyzing receivers described in the patent, it represents the second experiment which I referred to.

Int. 17. You mentioned the fact yesterday that since the date of your report to Mr. Orton several different transmitters of a character essentially different from each other had been devised. Will you briefly describe these, and also state in what simple ways, known to you by experiment or otherwise, the function of throwing electrical undulations upon the line may be performed?

Ans. One of the transmitters I referred to was probably devised before the date of my report, although not known to me till afterwards, and consists of a diaphragm carrying a metallic conducting point, which vibrates in close proximity to another and fixed point, both points being immersed in a liquid of not very high conducting power. The principle of this is, that the resistance of an electric circuit, of which the conducting points and the liquid form a part, varies with the distance between the points, and thus causes the strength of the electric current from any constant source of electricity to vary in exact accordance with the movements of the diaphragm when put in motion by the impact of sound waves. This general type of transmitter, which throws a constant current into

3116

vibrations or undulations, by varying the resistance through which it has to pass, may be constructed in an almost infinite variety of ways. One of the best, as well as the simplest of these, consists simply of two flat discs of carbon, about the size and shape of a silver half dollar, one lying loosely upon and pressing only by its own weight against the other. The electric current passes from one disc to the other, through that portion of their surfaces which is in contact, and this contact is varied sufficiently to produce distinct articulation in a receiving instrument, merely by the direct impact of sound waves against one of the carbon discs. The same effect may be produced more or less perfectly by the use of three smooth wire nails, two of them being laid side by side, and connected with the respective poles of a battery, and the third one laid across the first two, so as to connect them. On one occasion I made a very excellent transmitter of a metallic watch chain, which I crumpled up into a pile and laid on a metallic plate with another small metallic place resting upon the top of the pile through which the current was conducted, passing through the chain and out by the lower plate. By speaking in the vicinity of this apparatus the atmospheric vibrations were communicated to the lower plate and thence to the pile of chain, which latter formed a more or less good conductor, as its several parts were pressed more or less closely together by the vibratory motion. The apparatus known as the Reis telephone will transmit articulate sounds quite well when a drop of liquid is placed between the contact points so as to prevent the circuit being absolutely interrupted at any time. There are also very efficient transmitters in use consisting of a plate of metal and a plate of carbon placed in contact with each other, and pressed more or less closely together by the action upon them of a vibrating diaphragm.

Int. 18. What form of transmitting apparatus is put into the telephones of the American Speaking Telephone Company, as now made?

[*Objected to.*]

Ans. The kind described in the last clause of my last answer.

Int. 19. Returning for a moment to the apparatus which was exhibited by Mr. Gray, in New York, in 1875, as you have men-

3117

tioned and in which exhibition you participated, is the proportion of electric current on the short circuit (when that is closed), and the proportion which is at the same time on the main circuit, as the resistance of the two circuits?

Ans. The strength of current in each circuit is inversely proportional to its resistance; that is, if the resistance of the long circuit, for example, is one thousand times that of the short one, the strength of current in the short circuit will be one thousand times that in the long one. The resistance of the battery has some influence on this result, but too little to be taken into consideration in practice. I omit the resistance of the battery where I speak above of the resistance of the circuit.

[*Adjourned to May* 12, 1879, 11 *A. M.*]

MAY 12, 1879, 11 A. M.

Int. 20. In your answer to the fifteenth interrogatory, you say (speaking of a certain demonstration in New York), "Tunes were transmitted by Mr. Goodridge and accurately reproduced on each of these receivers in respect to tone, pitch and quality," the tunes referred to being produced by the vibration of musical reeds in a transmitting apparatus, such as is described by Mr. Goodridge in his first answer of May 6. Will you tell us the technical meaning of the terms "tone," "pitch" and "quality," as used in the science and art of the electrical transmission of sound?

Ans. I have used these terms in precisely the same sense as they are used by scientists in discussions relating to the physical transmission of sound. By "tone" I mean the strength or loudness of the sound, as distinguishing a loud tone from a low tone, a characteristic which depends upon the amplitude or wave height of the sound vibrations; by "pitch," I mean the rate of vibration or number of vibrations per unit of time, and by "quality" I mean that characteristic which results from the coexistence of two or more separate sets of vibrations, differing from each other in tone or in pitch, or both.

Int. 21. What is meant by the *form* of electrical undulations produced in the transmission and reproduction of composite sounds as to their tone and pitch and quality?

Ans. Strictly speaking, electrical vibrations are without form, and the same is true of the ordinary sonorous vibrations in the atmosphere or other elastic media. The term "form of vibration," when used in the scientific sense, I understand to refer to the form by which these vibrations may be properly and correctly represented graphically, that is, by diagram.

Int. 22. What is the character of the difference, if there is any, between the method of transmitting composite sound by electric undulations upon a closed circuit and its reproduction there by the operation of a common receiver, as heretofore described by you, whether the composite sound so transmitted and reproduced be the combination of tones which constitutes a musical chord or the combination of tones which constitutes articulate speech?

Ans. I cannot see that there is any essential difference. I believe that articulate speech might be reproduced by a proper combination of musical, and if I may use the term, unmusical sounds, upon a common or universal receiver through an electric circuit by means of mechanical transmitters. Of course it would be very difficult to do this, owing to the great variety of different sounds which enter into articulate speech, but I believe the principle, so far as the electric transmission is concerned, to be the same in the two cases.

Int. 23. I understand that in this demonstration, which took place in New York in the fall of 1875, with Mr. Gray's multiple transmitter, closed circuit and common receiver, musical tones and harmonies were produced by the vibrations of the reeds at the transmitting station, which tones and harmonies were audible through the air to the persons in the room with the transmitter at the time. Was that so?

Ans. That was the case, and in going from one room to the other, the character of the musical sounds appeared to be in all respects precisely the same as emitted by the sending and by the receiving instruments.

Int. 24. Will you refer to any patent granted to Mr. Elisha Gray, of date prior to January, 1876, in which is described a method of inducing electrical undulations in a closed circuit, by the vibrations of a reed or diaphragm, caused to vibrate by the impact

3119

of air waves accompanying the production of sound, and quote from and explain such description, so far as is necessary to a clear understanding of the patent in this respect,

Ans. The two patents of Mr. Elisha Gray, for "Improvements in Electric Telegraphs for Transmitting Musical Tones," dated July 27, 1875, and numbered respectively, 166,095 and 166,096, describe a method of inducing electrical vibrations in a closed circuit, and reproducing them upon a common or universal receiver. The transmitting apparatus described in these two patents is substantially the same, and is that represented by defendants' Exhibit, Gray's Two-Tone Transmitter. It consists of two automatic circuit breakers, each of which opens and closes a separate branch of a primary circuit, at a definite rate of vibration, the rate of each circuit breaker depending upon its construction or adjustment, and being different from that of the other. By saying that each circuit breaker is placed in a separate branch of a primary circuit, I mean that the current from the primary battery, after leaving one pole of the battery, is divided between two branching conductors which lead respectively to the circuit breakers, after passing through which they again unite in a single large post, situated between the two circuit breakers in the exhibit, and thence pass to the primary wire of an electro-magnetic induction coil. In each of these branches is a finger key, which when closed puts in action the automatic circuit breaker in that branch. The secondary wire of the induction coil forms a portion of a closed circuit extending from the transmitting to the receiving station, at which latter place it passes through a common receiver which in the patent 166,095 consists of an electro-magnet with a hollow cylinder of metal placed upon its poles, and in patent 166,096 consists of a hollow metallic cylinder connected with the ground, upon which cylinder the operator rubs his finger, holding at the same time in his hand an electrode connected with the line wire, so that the circuit is completed through a portion of his body. Either of these two forms of receivers is capable of reproducing all the different characteristics of sound. In patent 166,095 it is stated that "mechanical circuit breakers might be substituted for the automatic vibrating electrotome, hereinbefore described," and in patent 166,096 it

is also stated that "the interruptions in the primary circuit, which cause the induced secondary currents or impulses, may be produced by a mechanical circuit breaker, having the requisite rapidity of motion, such as a revolving wheel or revolving brush; or they may be produced by providing the vibrating reed or reeds of an organ with contact points, so that, as the reed vibrates, it will transmit impulses corresponding in number per second to the number of vibrations per second of the notes sounded by the organ pipe." In Elisha Gray's patent, No. 173,460, for "Improvement in Automatic Circuit Breakers for Electro-Harmonic Telegraphs," dated Feb. 15, 1876, the last-mentioned form of circuit breaker is described in detail. The specification says: "My invention relates to electro-harmonic telegraphs of the class secured to me by Letters Patent of the United States, numbered respectively 176,095 (which I suppose to be a misprint for 166,095) and 166,096, granted July 27, 1875. Its object is to produce a simple and effective circuit breaker vibrating automatically with sufficient rapidity to produce a musical tone of a given pitch, the electrical impulses thus generated being transmitted through an electric circuit, and reproduced at the other end of the line, as set forth in my patents above mentioned; to which end my improvement consists in combining with an organ, or other wind pipe, a diaphragm vibrated by sounding said pipe, and an electric circuit connected with said diaphragm so as to be opened and closed by its vibrations." The drawings show and the specification describes an organ pipe of the usual and well-known construction, but having an opening in its side, over which a membraneous diaphragm is stretched. This diaphragm carries a contact point which plays against another fixed contact point mounted upon a metallic bar over the opening. The operation of the apparatus is described in the specification in the following language: "When the column of air in the pipe is vibrated by sounding the pipe, the diaphragm will vibrate correspondingly with the musical tone thus produced, and open and close the circuit accordingly, thus transmitting the vibrations to the receiving instrument for utilization, as mentioned in my patents before referred to. Obviously, the vibrations of several pipes, giving notes of different pitch, may be simultaneously transmitted through a single wire by suitable mechanism." I find there-

3121

fore that Mr. Gray's patents, Nos. 166,095, 166,096 and 173,460, when taken in connection with each other, describe and show a method of inducing electrical undulations in a closed circuit by the vibrations of a reed or diaphragm caused to vibrate by the impact of air waves accompanying the production of sound, and reproducing them upon a common or universal receiver.

[1.15 *P. M.*, *adjourned to* 2 *P. M.*]

2 P. M, *resumed.*

Int. 25. Referring to the two patents Nos. 166,095 and 166,096, do you find in them a description of the method and of the means of working out the method described in the last question as it relates to the vibration of a reed, which description is sufficient to enable an electrical engineer of that date, with the then common knowledge of the art, to construct such apparatus and with it practise such method successfully?

Ans. The extract from patent No. 166,096, which I quoted in my last answer, in my opinion gives a sufficient description of the manner of operating the apparatus by means of the vibrating reed or reeds of an organ, to enable any person skilled in the art at the date of the patent to construct, arrange and operate the apparatus as contemplated therein.

Int. 26. Please explain the difference between the manner in which the vibrations of a reed or other vibrating body are set up when force is applied directly to it for that purpose, and where they are set up by the impact of previously produced sound waves.

Ans. When a sufficient force is applied once for all to a reed or other body, whose vibrations follow the law of the pendulum, it will continue to vibrate after the application of such force until it comes to rest through the action of external forces or resistances. The same body may be set in vibration by the repeated action of a very small force, which, if applied momentarily, would be unable to move it perceptibly, provided this force is applied at regularly recurring intervals which correspond with the rate of vibration of the body or some multiple of such rate of vibration.

Int. 27. Will you state what is the advantage, and the reason of the advantage, of having the coil of wire wound about that part of the magnet which is near the pole, as compared with having it wound

3122

the length of the magnet, being the feature of construction mentioned as an element in the eighth claim of the Bell patent of 1877, in suit?

Ans. The advantage in so winding the magnet consists in the fact that it facilitates or makes more rapid the magnetization and demagnetization of the core, and thus renders it able to respond more perfectly to rapid or irregular vibrations. If we have a magnet, say two inches long, and wind a given length of wire upon it in layers extending over its whole length, we shall get a magnetic effect or lifting power of a certain amount, which is mathematically expressed (at least, within the limits of magnetic strength employed in telegraphy) by the product of the strength of current into the number of convolutions. Now if we wind the same length of wire upon one inch, or half the length of the magnet, the average length of each convolution will of course, be greater and the number of convolutions proportionately less. Therefore, the actual magnetism developed is less than in the first case, but the magnetism which is developed, being all in the end of the core nearest the pole, is not propagated through so great a length of the core, and consequently attains its maximum more quickly. For this reason, as the speed of manipulation has increased on our telegraph lines, the coils of the magnets have been more and more shortened, being now made perhaps not more than one fifth the length that they were ordinarily made twenty years ago.

Int. 28. Mr. Edward S. Renwick, in his forty-third answer (page 230 of the printed record), speaking of the permanent magnet with coils upon the end or ends of said magnet nearest the plate, as in Bell's eighth claim, says that he finds a description of the same kind of magnet in the work entitled "Der Elektromagnetische Telegraph," by Dr. H. Schellen, 1867. Will you produce, to be made an exhibit with your deposition, an English translation of the passage in Schellen to which Mr. Renwick refers?

Ans. I produce a translation which I made myself, with the assistance of a friend, about three years ago.

[*The paper produced is put in evidence for defendant, and marked "Defendant's Exhibit Schellen Translation, W. C. W., Examiner,"*

3123

and is admitted by the counsel for the complainants to be a correct translation from the original German.]

Int. 29. Please state whether, in your judgment, the operation of the short-coil-magnet in Schellen's paper is or is not substantially the same as the operation of the short-coil-magnet in the combination mentioned in Mr. Bell's eighth claim, and state what specific difference there is in the manner in which the short-coil-magnet, having such mode of operation, is employed in the two cases respectively.

Ans. As far as the magnet is concerned, the operation is the same, it being the object in both cases to get the quickest possible action upon the armature. In the Hughes printing telegraph, of which the magnet described by Schellen forms a part, a variation of the hundredth part of a second in the time of movement of the armature would cause a wrong letter to be printed. The armature in the Schellen magnet is drawn away from the magnet by a spring whenever the normal magnetism is reduced by the passage through the coils of a current tending to produce contrary polarity in the magnet, and having been thus separated from the magnet is replaced upon its poles by the mechanical action of the machinery which had been previously set in action by its release. In Mr. Bell's patent the movements of the plate or armature, both from and to the magnet, are produced by the action of the latter when it is used as a receiving instrument.

Int. 30. The difference then, as I understand you, between the two apparatuses is in the means by which the armature is made to approach and recede from the short-coil-magnet, the mutual operation of the armature and the short-coil-magnet (irrespectively of the means mentioned) being substantially the same. Am I right?

Ans. You are right.

Int. 31. Please state how many cups of battery are usually employed or required for the purposes of speaking telephones working with electro-magnets.

Ans. Usually not more than one cup of battery is necessary to transmit from fifty to one hundred miles.

Int. 32. Among the books to which Mr. Renwick referred in his deposition is "The Electric Telegraph, by Dr. Lardner; a new edition revised and rewritten by Edward B. Bright." This book

bears no date of publication. State how long you have known it in this country, or owned a copy of it.

Ans. I purchased a copy of this book, precisely the same as the one now shown me, in 1868, and it has been in my possession ever since in this country.

Int. 33. Were you present at the experiments which Mr. Edward S. Renwick describes as tried by him with two forms of Bell telephone, said to have been manufactured by the Bell Telephone Company; the experiments consisting in testing the instruments with and without the covers, and both as transmitters and receivers, with a view to determine whether the presence or absence of the cover had any effect as to the distinctness or loudness of the sounds transmitted or received? (I refer to Mr. Renwick's thirty-fifth answer, page 224 of the printed record.) And if you were present at such experiments, state whether Mr. Renwick correctly describes them and their results.

Ans. I was present and assisted Mr. Renwick in these experiments, in addition to which, I had, a day or two before, made a similar series of experiments by myself, with the aid of an assistant. Precisely the same results were obtained in both these series of experiments, and these are correctly stated by Mr. Renwick in his answer referred to in the question.

Int. 34 So with the experiments mentioned by him in his thirty-ninth answer, relating to the speaking tube and chamber in the Bell patent of 1877: did you witness those experiments or assist in them, and does he correctly describe them and their results?

Ans. I witnessed these experiments, and also participated in them, and the account of them and of the results obtained are correctly stated by Mr. Renwick.

Int. 35. In his forty-fourth answer Mr. Renwick says that he knows, by actual trial, that a receiving instrument constructed like the vocalizing chamber described in Mr. Gray's caveat will receive, and render audible, articulate speech. Do you know the instrument he refers to, and have you tried it yourself and with what results?

Ans. I do know the instrument he refers to and have tested it by myself, and also in company with Mr. Renwick, in order to ascertain whether or not it was well adapted as a receiving instrument

3125

for articulate speech. The articulation was most excellent. I do not know that I have ever heard better from any instrument.

[*Adjourned to May* 13, 1879, *at* 10 *A. M.*]

MAY 13, 1879, 10 A. M.

Cross Examination by J. J. STORROW, Esq., *of Counsel for Complainants.*

Cross-Int. 36. Please describe the speaking telephone which you say you saw in Boston in the summer of 1877, and tell me where it was that you saw it.

Ans. As I saw it, it consisted simply of a wooden box with a mouthpiece and two binding screws for attaching the wires. I did not see the internal arrangement of it. The place where I saw it was at the hardware store of Stearns & Brother, I think it is, in Pearl Street, Boston. They are dealers in telegraphic and electric supplies.

Cross-Int. 37. Did it resemble in outward appearance either of the exhibits that have been put into the case, called defendant's Exhibits Bell Telephone A or B?

Ans. Exhibit A is very much like the one I saw. My recollection is that the box was about the same size as Exhibit A but shorter. It may have been precisely like Exhibit A.

Cross-Int. 38. Did you talk into it or listen at it or both?

Ans. I both talked and listened.

Cross-Int. 39. And when you listened did you hear articulate speech from it?

Ans. My recollection is that I did, with some little difficulty, however, owing to inductive disturbances from other lines.

Cross-Int. 40. Where was the other end of that telephone line?

Ans. I believe itwas at Mr. Charles Williams, Jr.s, manufactory in Court St., something less than half a mile distant.

Cross-Int. 41. Had you ever before that heard articulate speech transmitted over a telegraph wire by means of electricity?

Ans. I had not.

Cross-Int. 42. After using the instrument at Mr. Stearns' as a transmitter, that is, to speak into, were any changes made in it or

3126

in its adjustment in order to enable it to be used as a receiver to hear articulate speech from?

Ans. To the best of my recollection, there were not.

Cross-Int. 43. Was the structure and arrangement of the parts inside the box, or the mode of operation of the apparatus, explained to you at that time?

Ans. They were not, although I had a general idea of them, derived from accounts which I had read. I asked no questions about the interior construction of the instrument.

Cross-Int. 44. When did you first learn by actual observation and study the interior construction of a speaking telephone?

Ans. About the 1st of August, 1877.

Cross-Int. 45. What kind of a telephone did you then examine and where did you get it?

Ans. It was like defendants' Exhibit Bell Telephone B, and was shown me by my brother, Henry W. Pope, general superintendent of the American District Telegraph Company, in New York City.

Cross-Int. 46. It was made or purported to be made under the Bell patents, did it not?

Ans. It was so marked or stamped.

Cross-Int. 47. Did you perceive any substantial difference between that telephone, and any apparatus or instrument you had seen before your visit to Boston, in July, 1877?

Ans. I did.

Cross-Int. 48 (*de bene*). In your report or reply to the questions which Mr. Orton put to you, as to what patents or inventions it was desirable or necessary for him to acquire the control of, for the purpose of using speaking telephones in connection with their business, as you have testified in your fourth answer, did you advise him that Mr. Gray's inventions and patents were the only inventions or patents which it was necessary for him to acquire or control?

[*The question is objected to and the witness is instructed not to answer, the ground being that no cross examination is proper except as to what the witness has testified that he reported to Mr. Orton. As to any other matters upon which he reported, they are not proper*

3127

to be inquired into, being the private business of the parties employing Mr. Pope.]

Ans. By advice of counsel, I decline to answer.

Cross-Int. 49. In your fourth answer you stated that Mr. Orton said to you, "I have been looking into this matter of the telephone somewhat, and regard it as a matter likely to be of considerable future importance. If this proves to be the case, it is very necessary that we should have the right to use it; therefore I wish you to make a careful and thorough investigation of the whole subject, and ascertain what are the fundamental principles of the invention, and what inventions or patents it will be desirable or necessary for us to acquire the control of in order to be able to use the invention in connection with our business." You then said in the same answer that you set about this investigation, and were engaged in it for two or three months. You further said in the same answer that you reported to him that it was most important to obtain control of Mr. Gray's inventions and patents. Was that advice the whole of the reply or report you made to him in answer to his question and directions?

Ans. It was not.

Cross-Int. 50. Was the opinion that it was desirable to acquire Mr. Gray's patents and inventions the only result you arrived at from the investigations he directed you to make?

Ans. It was not.

Cross-Int. 51. In your fourth answer you speak of "the simultaneous transmission of two or any greater number of tones over the same wire, without destroying their individuality." What do you mean by the phrase "without destroying their individuality"?

Ans. I mean that in the use of this method the compound tone which appears upon the receiving instrument contains all the simple tones of which it was originally made up, so that it is possible to distinguish each of them by the ear, if the latter is sufficiently well trained, or to separate them from each other by suitable analyzing apparatus.

Cross-Int. 52. Using the word "individuality" in the sense which you have just explained, do you know of any way in which

you can transmit two or any greater number of tones over a single wire, and in so doing destroy their "individuality."

Ans. As I understand the question, I should say "Yes," although if the individuality of the tones was destroyed, it would hardly be proper to say that the tones were actually transmitted over the wire.

Cross-Int. 53. How would you destroy such "individuality"?

Ans. By transmitting all the tones with the same amplitude of wave, that is to say, so that the amplitude of the waves would be the same, irrespective of the number of tones transmitted at the same time.

Cross-Int. 54. What wave or waves do you refer to?

Ans. I refer to the electric waves, so called. It would also be true of the sound waves as generated or produced by the receiving instrument.

Cross-Int. 55. You speak in your fifty-third answer of the amplitude of the waves being the same. What two or more waves do you refer to as having the same amplitude?

Ans. I mean any two or more waves traversing the electric conductor, or produced by the action of the receiving instrument upon the air, whether simple waves or compound waves, formed by the conjunction of simple waves of two or more different series.

Cross-Int. 56. Do you mean to refer to two waves which are simultaneous, or to two waves one of which follows the other?

Ans. I referred especially to two simultaneous waves, but it may be also true of successive waves, or of waves which as it were overlap each other, being partly simultaneous and partly successive.

Cross-Int. 57. Referring now to your fifty-third answer, and the explanation you have just given of it, do I understand you to mean that if you transmit several tones simultaneously over one wire in such a manner that the electrical vibrations or waves belonging to each have the same amplitude, you would destroy what you call the individuality?

Ans. That is not precisely my meaning. I will try to explain myself more clearly. Suppose two different tones to be produced successively, each having the same amplitude of wave, but a different number of waves per unit of time, being, as it is technically termed, of different pitch. Of course when produced in this way,

3129

the individuality of each is preserved. Now suppose the same tones to be produced simultaneously. In this case, some individual wave of one series might precisely coincide with one wave of the other series. Now, in order to preserve the individuality of any two waves, thus produced at the same instant, it is essential that the amplitude or height of the compound or double wave should be equal to the sum of the amplitudes of the two simple waves of which it is formed. If this is not accomplished, and the amplitude of the compound wave is only equal to that of the higher of the two waves of which it is made up, then so far as the individual waves of the two series coincide with or overlap one another, their individuality is destroyed.

Cross-Int. 58. In the first part of the preceding answer, by the use of the word "successively," you refer to tones one of which does not begin until after the other has ceased, do you?

Ans. Yes.

Cross-Int. 59. In the same answer, what do you mean by the phrase, "compound or double wave"?

Ans. I mean a wave which results from the production of two simple waves partially or wholly at the same time, that is, simultaneously.

Cross-Int. 60. That is, you refer to two waves, of which one occupies, in whole or in part, the same duration of time or extent of space which is occupied by the other, do you?

Ans. I do.

Cross-Int. 61. Am I right in supposing that the amplitude of vibration at each and every point of the ground common to both, is what is called the algebraic sum of the two separate waves, or so much of them as occupies the same space?

Ans. You are.

Cross-Int. 62. Is that algebraic sum what you refer to as the amplitude or height of the compound wave?

Ans. It is.

Cross-Int. 63. Then, as I understand you, in order to preserve the individuality of the tone, or vibrations which correspond to it, it is necessary that this height or amplitude of the compound wave

should be equal to the algebraic sum of the amplitudes of the simple waves of which it is formed. Am I right in this?

Ans. You are.

Cross-Int. 64. What method or arrangement is it necessary to adopt in a telephonic apparatus, in order to make it certain that the height or amplitude of the compound wave shall at each and every point be equal to the algebraic sum of the heights or amplitudes of the various simple waves, which, or parts of which, occupy the same point?

Ans. It is necessary that the strength of the electric current in the circuit should be either directly or inversely proportional to the amplitude of the compound or resultant wave at all times during the transmission. This may be accomplished either by varying the electro-motive force which produces the electric current while the resistance remains constant, or conversely by varying the resistance while the electro-motive force remains constant. When the electro-motive force is varied, it is essential that the apparatus should be so arranged that each separate series of vibrations should either add or take away its proper proportion of the normal electro-motive force. By the other method it should in like manner add or take away its due proportion of the normal resistance.

Cross-Int. 65. The substantial identity of result obtained in the cases you mentioned by the use of the two methods — varying the electro-motive force, or varying the resistance — is the application of Ohm's law that the strength of the current equals the electro-motive force, divided by the resistance, — ($S = \frac{e}{r}$). Is that so?

Ans. That is so.

Cross-Int. 66. The electric undulations or waves on the line wire mean and are variations in the strength of current existing at any one point upon the wire. Is it not so?

Ans. At any one point of *time* upon the wire, I should say, assuming the transmission to be instantaneous, as it practically is.

Cross-Int. 67. If you cause to flow upon a wire, at its transmitting end, a steady and continuous current of a constant electro-motive force, making no change in the resistance, or condition of the circuit, you do not get any electrical vibrations, waves or undulations on the wire, do you?

3131

Ans. We do not.

Cross-Int. 68. If, now, keeping the circuit in the same condition, you vary from instant to instant the electro-motive force which flows upon the wire from the transmitting end, you do get on the wire electrical vibrations, waves, or impulses, which correspond in their periods and in their force (or what is graphically represented and often spoken of as amplitude) to the variations in the electro-motive force so thrown upon the wire, do you not?

Ans. Yes.

Cross-Int. 69. If keeping a current produced by an unvarying constant electro-motive force flowing upon the wire at its transmitting end, you interpose in the circuit a resistance which varies from instant to instant, or what amounts to the same thing, make some change in some portion of the circuit which varies its resistance, you will then have electrical waves, undulations or successive impulses upon the circuit, which will correspond in their periods and in their force with these variations in the resistance of the circuit, the strongest current or impulse corresponding with the least resistance or the best conductivity, and *vice versa*, is it not so?

Ans. It is.

Cross-Int. 70. In your sixty-fourth answer you told us what condition of the current it was necessary to bring about upon the line, in order to produce the results therein referred to. Now, I wish you would tell me what kind of an apparatus it is necessary to use, in order to produce that requisite condition upon the line wire.

Ans. In my answer to the sixty-fourth cross-interrogatory I have stated in a broad sense what kind of an apparatus it is necessary to employ, that is, what the principal requisites are which must be fulfilled. There are several different kinds of apparatus, representing different types, which fulfil these requirements. One example of such an apparatus is found in the patent of Elisha Gray, No. 186,340, dated Jan. 16, 1877, being defendant's Exhibit Gray's Closed Circuit Patent, which should be taken in connection with his patent No. 165,728, of July 20, 1875, being defendant's Exhibit Gray's Reed Transmitter. Another example is found in the defendant's Exhibits Bell Telephone A and Bell Telephone B.

[1 *P. M.*, *adjourned to* 2 *P. M.*]

2 P. M. *resumed.*

Cross-Int. 71. Would the transmitting apparatus shown in Gray's patent, No. 166,095 (being the same transmitter as the Exhibit Gray's Two-Tone Transmitter), connected up with a line wire and battery in the manner shown in that patent, also produce the result stated in your last answer?

Ans. It would produce that result to a certain extent, but not perfectly; if two waves happened to coincide, one of which belonged to each of the two separate series, the resultant amplitude of the combined wave would be greater than that of either of the separate waves, but would be less than the algebraic sum of the two separate waves. To fulfil the theoretical conditions, it should equal that algebraic sum.

Cross-Int. 72. Would it fulfil those theoretical conditions sufficiently to practically preserve what you call the individuality of the tones?

Ans. With a small number of tones, say two or three, I should judge that it would. With a great number it would not. The greater the number of tones, the less perfectly would the conditions be fulfilled.

Cross-Int. 73. Now, suppose that apparatus and its connections were changed, so that instead of having one battery to supply current to both vibrators, by a line branching out between the battery and the vibrators you had a separate battery for each vibrator with a wire leading from it to its own vibrator, the branch currents, after leaving the vibrators, coming together in one line at the post as before, would you then fulfil the theoretical conditions required to preserve what you call the individuality of the tones?

Ans. The conditions would then be fulfilled but little if any more nearly than by the arrangement shown in the patent.

Cross-Int. 74. In the arrangement shown in the last question, each vibrator, when it made contact, would throw upon the line a momentary current or wave, corresponding in force or amplitude to the electro-motive force of its own battery, would it not?

Ans. It would, but when both vibrators were closed at the same time, the combined electro-motive force of the two separate batteries thus placed in parallel branch circuits would not be any greater than

3133

that of either one of the separate batteries by itself. The effective strength of the combined current from both in the undivided portion of the circuit would be greater than that of one alone, but this would be due to the diminution of the total resistance of the circuit, the resistance of the two branches being only half that of one branch when arranged in this way.

Cross-Int. 75. What is the difference between the mode of operation of the arrangement shown in Gray's patent, No. 186,340, and the mode of operation referred to in the last two questions, so far as relates to preserving the "individuality" of tones when more than three are simultaneously transmitted?

Ans The difference consists in the manner in which the several batteries or the several sections of one battery (whichever way we may choose to regard it) are connected with the line. In the arrangement referred to in the last two questions, the respective batteries of the different transmitters are connected in what is technically known as "multiple arc," that is, side by side, or in parallel branch circuits. When connected in this way, the electro-motive force which produces the current is no greater when all the batteries are in action than when only one of them is. Electro-motive force may be likened to the pressure or head of water in a reservoir. If we bore two holes in a reservoir side by side, at the same height, we shall get more water, but the pressure will remain the same. In the arrangement shown in Gray's patent, No. 186,340, the several batteries or sections of battery are connected in series, so that the electro-motive force of one section is added to that of another when the two are in action at the same time. To carry out my former illustration, this would correspond to doubling the height of the water in the reservoir, and consequently the pressure which corresponds to the electro motive force, in which case we should get twice the amount of water through the same opening. Consequently when two batteries are arranged in parallel circuits, as in the first case, and connected to a line at the same time, whatever increase in the strength of current takes place in the undivided portion of the circuit is due solely to the diminution of the total resistance, and if the undivided circuit has a resistance, which is large in proportion to that of the branch circuits, the increase is

almost imperceptible. Under the same circumstances, if we connect the two batteries in series, we shall double the total electro-motive force, while the total resistance remains almost unaltered, and if there were no resistance in the batteries themselves and their connections, it would remain wholly unaltered, which is practically the case under the ordinary conditions of use. If in the arrangement referred to in the last two questions, the resistance of the undivided portion of the circuit was very great, compared with that of the branches, the amplitude of wave or strength of current would practically be no greater with both branch circuits closed than with one. As it is actually arranged, however, the resistance of the undivided circuit is small, and we therefore get a considerably stronger current with both branches closed than with one, although it is considerably less than twice the amount.

Cross-Int. 76. Do you mean to say that a hole in the side of a reservoir an inch square, would give you no more pressure in the water flowing out than a hole a foot square at the same mean height?

Ans. I don't see that it would change the pressure. It would increase the quantity of water flowing out, by means corresponding to the diminution of resistance in an electric circuit.

Cross-Int. 77. It would take more strength in a man to hold a board to stop the larger opening against the pressure of the water trying to issue from it, than it would to hold a board to stop the smaller opening, would it not?

Ans. Only so far as one opening was larger than the other in a perpendicular direction. I do not think the force required to hold a board against an opening one inch in height and twelve inches long say, would be any greater than if it was only one inch high and one inch long.

Cross-Int. 78. Is it with that understanding of the laws of nature applicable to the flow and pressure of fluids, that you made your seventy-fifth answer?

Ans. I think I may say that it is. At least I mean to be understood that the combined electro-motive force of two or any greater number of batteries of the same kind and an equal number of cells,

when connected in parallel branch circuits, is no greater than that of one.

Cross-Int. 79. Please to look at the last sentence of your seventh answer and tell me what you mean by the phrase "the proper combination of simple electrical vibrations or series of vibrations," which need to be set up in order to the transmission of articulate speech.

Ans. The sound or sounds which we term articulate speech are produced by compound or resultant vibrations, which are built up or composed of numerous series of simple vibrations superposed upon each other. What I meant by this portion of the answer referred to was, that I believed it to be possible, if any one had the time and patience to do it, to analyze these compound vibrations and ascertain of what simple vibrations they were composed, and then to mechanically reproduce these simple vibrations by proper apparatus, and thus reconstruct or reproduce the composite tone representing articulate speech.

Cross-Int. 80. You use the phrase in your last answer, "numerous series of simple vibrations." In your seventh answer you spoke, referring to the same subject, of a "great number" of series: in the case of the human voice, how many of these different vibrations go to make up the complex vibration which affects our ear as a vocal sound?

Ans. I have no definite idea, but imagine the number to be quite large. I am of the opinion that it differs greatly in different voices.

Cross-Int. 81. If I understand you, then, in order to construct a speaking telephone, you must have an apparatus at the transmitting end which is capable of throwing upon the line wire a composite vibration made up of a large number of simple vibrations, the line wire to conduct such electrical impulses to the receiving station, and a receiving apparatus, which, being actuated by these peculiar electrical impulses, will so move as to give rise in the air to the composite aerial vibrations which constitute or affect the ear as an articulate sound. Is that your meaning?

Ans. Yes, that correctly represents my meaning.

Cross-Int. 82. And in order to transmit speech you must have

3136

these three things connected up together, and a person to talk at the transmitting end, must you not?

Ans. Practically that is the case, although, as I have before said, I think it might be done by a mechanical device for transmission. In fact I have known it to be done by a mechanical device when there was no person speaking into the transmitting apparatus.

Cross-Int. 83. Then if, by mechanically varying the electromotive force acting upon the wire, or varying the resistances in the circuit, by mechanical means other than the effect of sound waves, you should produce sounds like articulate speech at the receiving station, would you call such an apparatus a speaking telephone?

Ans. I think it might properly be called such. It would be one kind of a speaking telephone, in my opinion.

Cross-Int. 84. Have you used the phrase "speaking telephone' in your deposition with the understanding that it would include such an apparatus?

Ans. I had not such an apparatus particularly in mind when I made use of the term, and am not certain whether, as I used it, it would properly include such an apparatus, although I am inclined to think that it would.

Cross-Int. 85. In your forty-seventh cross-answer you said that you perceived a substantial difference between the Bell telephone you examined in the summer of 1877 and any apparatus you had seen before that summer. In the fourth question you were asked with what result you pursued the investigations Mr. Orton directed you to make, and which appear by your fourth answer to have been made in the summer and autumn of 1877. I now ask you whether, as one of the results of those investigations, you considered it important for the purposes which Mr. Orton had in view, as expressed in your fourth answer, that he should procure the right to use those features which constituted the substantial difference between that telephone and any apparatus or instrument you had previously seen?

Ans. I think I may answer that question best by saying that this was true as to some features and not as to others. I regarded some

2137

features of the general invention as essential, and others as more or less important, without being essential.

Cross-Int. 86. In that answer you say that the method which you considered as fundamental in the speaking telephone "necessarily involved the use of a closed or uninterrupted circuit in the main line." What do you mean by "main line"?

Ans. I mean the line extending from the transmitting to the receiving station and in which the receiving instrument is placed.

Cross-Int. 87. At what part of the transmitting station will it begin?

Ans. It is said to begin at the earth when the earth is used as part of the circuit. In the case of a metallic circuit, it can hardly be said to begin anywhere in particular. I do not consider that there is any actual difference in the two cases, it being a matter of names, rather than of substance.

Cross-Int. 88. If I understand you, then, by "main circuit" in that answer, you mean the whole path over which the current flows from the sending pole of the battery through the transmitting station and the line wire and the receiving station and the return (either through the earth or through a metallic return wire) back to the other pole of the battery. Am I right in that?

Ans. Yes, that is my meaning.

Cross-Int. 89. And you consider it essential that that circuit should always be closed, so that a current can at any moment traverse it. Is that so?

Ans. Yes.

Cross-Int. 90. Suppose you work your line with an induction coil at the transmitting station. Can the current from the battery traverse that coil, go through the receiving station and thence back to battery?

Ans. It cannot.

Cross-Int. 91. Would you consider that a closed or an uninterrupted circuit, in the sense in which you have used that phrase, and if so, why?

Ans. Yes, I so consider it according to my definition in my answer to the ninth interrogatory. In the case just referred to, the induction coil is the source of electricity in the main line, and the

3138

electric current which is set up in the main line by the action of the induction coil is actually, though indirectly, derived from the battery.

Cross-Int. 92. Then, if I understand you, you would consider that what is called the primary circuit, extending from the sending pole of the battery, through the primary wire of the induction coil and back to battery, together with what is called the secondary circuit, which includes the secondary wire of the induction coil, the line wire, the receiving station and the return (either earth or metallic), to the other end of the secondary coil, all form what you consider, in the sense in which you have been using the phrase, one main circuit, and that this is closed or uninterrupted when, either directly or indirectly, the electric motive force of the battery gives rise to an electrical impulse which traverses the whole and which must traverse the whole in order that the receiving instrument shall operate. Am I right in this?

Ans. That is not what I meant to be understood to say. I mean by the closed main circuit, the part through which the main current flows from the transmitting to the receiving station. So far as the production of this main current and its action upon the receiving instrument is concerned, there is no substantial difference in principle, whether an induction coil like that represented in Gray's patent, No. 166,095, be used, or a magneto-electric apparatus, as in defendant's Exhibits Bell Telephone A and B. In both cases the current or electric impulses are induced in the main circuit by increasing and decreasing the magnetism in an iron core around which the wire of the main circuit is coiled. In one case this magnetism is increased and diminished by the action of a battery and separate magnetizing coil, forming what is termed the primary circuit, and in the other case by causing an armature to approach and recede from the core, and thus change its magnetic state. The difference consists in the particular means employed to effect the necessary changes in the magnetic state of the iron core, but the main current is induced upon the line by the same immediate means in both cases.

Cross-Int. 93. In such an apparatus as that shown in the Gray patent, No. 166,095, do you consider that what you have called the main circuit includes the secondary circuit alone, or both primary and secondary circuits?

3139

Ans. The secondary circuit alone, and not the primary circuit.

Cross-Int. 94. Suppose the induction coil were placed at the receiving station, the primary circuit extending thither, what would you then call the main circuit, in the sense in which you have used that phrase in your fourth answer?

Ans. In the sense of that answer, I should still consider the secondary as the main circuit.

Cross-Int. 95. Then if you undertook to work a speaking telephone through an ordinary induction coil interposed somewhere between the two stations, all that would be necessary with reference to the conditions of the circuit, in your opinion, would be that the secondary circuit from the induction coil through the receiving station would be uninterrupted, and it would be of no consequence whether the primary circuit were open and interrupted or not. Is that the meaning you intended to convey by your fourth answer?

Ans. It would be necessary that the primary circuit should be uninterrupted.

Cross-Int. 96. Is it not true of all speaking telephones which you know of, that the entire circuit or circuits through which any electrical currents or impulses are caused to pass while the instrument is in operation is uninterrupted during the whole time a message is being transmitted?

Ans. Practically I believe that to be the case; that is, in so far as actual interruptions occur, the transmission is rendered less perfect.

Cross-Int. 97. In defendant's Exhibit Gray's Two-Tone Transmitter, when in action, the current from the battery passes up the uncovered leg of one magnet when its key is depressed, and thence through the reed to the screw contact point and down through the post and primary induction coil back to battery. When the reed in its vibration has sprung away from the contact point, no current passes through the primary of the induction coil. Am I right in this, assuming the case when only one of the keys is depressed and one of the vibrators thrown into operation?

Ans. You are.

Cross-Int. 98. Now at this alternate stopping and starting of

the primary current which takes place at each vibration of the reed, what electrical changes are thereby set up in the secondary circuit?

Ans. The moment the primary circuit is closed, the iron core of the induction coil begins to become magnetic, but does not reach its maximum of magnetization until a sensible time after the primary circuit has been closed. In an instrument provided with an automatic circuit breaker like the exhibit, the primary does not remain closed continuously long enough to permit the core to obtain its maximum magnetic charge before it is again interrupted. When this interruption takes place, the core instantly begins to lose its magnetism, which decreases rapidly until it practically disappears or until the primary circuit is closed again. This demagnetization takes place more rapidly than the magnetization, consequently the rise and fall of the magnetic condition in the core would be represented graphically by a series of waves in which the inclination was greater on the side representing the demagnetization, and the electric current induced in the secondary wire would correspond with the magnetic condition of the core and be properly represented by a similar figure.

[*Adjourned to May* 14, 1879, *at* 10 *P. M.*]

MAY 14, 1879, 10 A. M.

Cross-Int. 99. Then the magnetization of the core of the induction coil begins to take place the moment the contact between the vibrating reed and screw contact point permits the current to flow, and the demagnetization begins the instant that the current is stopped by the reed leaving that point. Is that so?

Ans. Undoubtedly this is the case, although the change in the magnetic state is not sufficient to be perceptible until after the lapse of a very brief period, — exceedingly brief, but possible to be measured.

Cross-Int. 100. Then, confining ourselves to perceptible effects, the magnetization takes place during the latter part of the period of contact, and the demagnetization begins the instant the magnetization has ceased to increase?

Ans. Yes, that is the fact.

3141

Cross-Int. 101. The demagnetization, if I understand you, proceeds more rapidly than the magnetization?

Ans. It does.

Cross-Int. 102. What does the length of time of demagnetization depend upon in this instrument?

Ans. Partly upon the size and shape of the iron core, partly upon the extent to which it has been magnetized, and partly upon the number of convolutions and resistance of the magnetizing coil. There are perhaps other influences, but these are the important ones.

Cross-Int. 103. What does the extent of the magnetization depend upon in this apparatus?

Ans. Other things being equal, it depends upon the strength of the magnetizing current, which is represented by the electro-motive force of the battery, divided by the resistance of the circuit traversed by the magnetizing current, and also upon the rapidity with which the impulses succeed each other.

Cross-Int. 104. When the apparatus is in proper working order, the electro-motive force of the battery and the resistance of the circuit are substantially the same during each successive contact and passage of current, are they not?

Ans. They are.

Cross-Int. 105. And using any one reed, the rapidity with which the impulses succeed each other is constant, is it not?

Ans. It is.

Cross-Int. 106. Then, if I understand you, the extent of magnetization is determined by the material conditions of the apparatus itself when in operation, considering the battery as part of the apparatus?

Ans. It is.

Cross-Int. 107. The length of time occupied in the magnetization and the length of time occupied in the demagnetization are also determined by the material conditions of the apparatus, including now the core and primary coil of the induction coils as part of the apparatus?

Ans. They are.

Cross-Int. 108. The electrical changes which take place in the secondary circuit, due to the effects in the induction coil, consist, if I

understand it, of a series of impulses, and not a steady, continuous current, such as flows from a battery over an ordinary closed circuit. I wish you would tell me, first, what determines the duration in time of each impulse; second, what determines the period of time that separates each impulse from its predecessor.

Ans. The length of each impulse depends, first, upon the time occupied in the charge and discharge of the electro-magnet of the vibrating electrotome, which in turn is governed by conditions which I have before stated; the more rapid the action of this magnet, the shorter will be the length of time during which the primary circuit will be closed at each vibration; second, upon the adjustment of the retractile force of the vibrating spring or reed of the electrotome and; third, upon the time of charge and discharge of the iron core of the induction coil. These are the principal conditions. There are probably others which exert some, though not much, influence upon it. The period of time, counting say from the beginning of one impulse to the beginning of the succeeding one, is determined by the pitch or rate of vibration peculiar to the reed which acts as a transmitter.

Cross-Int. 109. Then, if I understand you, the duration of each impulse of the secondary circuit depends upon the length of time during which the vibrating reed and screw contact point are in contact so as to close the primary circuit, and the period between the impulses of the secondary circuit is the same as the period between two successive contacts in the primary circuit. Am I right?

Ans. Other conditions being equal, you are.

Cross-Int. 110. Is the duration of each impulse in the secondary circuit longer or shorter than the period of contact during which the primary circuit is closed?

Ans. It is shorter, if we consider the period of magnetization only. If in addition we take into account the period during which demagnetization is going on after the cessation of the current, then it would be longer.

Cross-Int. 111. What determines the strength of each impulse in the secondary circuit in this apparatus?

Ans. Other conditions remaining unaltered, it depends upon

and is in proportion to the strength of the impulses in the primary circuit.

Cross-Int. 112. And the strength of those impulses in the primary circuit depends, I think you have already said, upon the material conditions of the apparatus, including the battery. Is that so?

Ans. It is.

Cross-Int. 113. Referring to your one hundred and eighth and one hundred and ninth cross-answers, the length of contact period during which the primary circuit remains closed, therein referred to, depends upon the material conditions of the apparatus. Is that so?

Ans. Upon its construction and adjustment, which is what I understand you to mean by "material conditions."

Cross-Int. 114. Now, if you open the key, which shuts the battery current off from the one reed which we have been considering, and close the other key, which lets the current upon the other vibrating reed of different pitch, the same phenomena which you have described with reference to the first reed will take place with reference to the second, with such variations as are due to the differences in the physical character and adjustment of the reed and of its electromagnet. Is that so?

Ans. That is so.

Cross-Int. 115. If now you simultaneously depress both keys so as to bring both reeds into operation at the same time, the phenomena which will be produced will be functions or resultants of the two sets of phenomena which have been described, and of the elements which gave rise to those phenomena, will they?

Ans. They will.

Cross-Int. 116. And in that case, the duration, intensity and periodical time of the impulses in the secondary circuit will depend upon the mechanical structure and adjustment of the apparatus, including therein the relative rates of vibration of the two reeds, and the phases of their relative vibrations, or the positions which they successively assume with relation to each other when vibrating, will they not?

Ans. Yes.

Cross-Int. 117. If the two reeds had precisely the same periods of vibration, and also the same phase of vibration, that is, made

and broke contact at precisely the same instant, the electrical phenomena on the secondary circuit would be the same essentially as when only one reed was used, would they not?

Ans. It would. The only difference would be in the strength of current or amplitude of the vibrations, the effect of which upon a receiving instrument would be to produce precisely the same tone, but with greater loudness or force.

Cross-Int. 118. The difference between the electrical phenomena produced in the secondary circuit when both keys are down, and reeds of different pitches are employed, as supposed in the one hundred and fifteenth and one hundred and sixteenth questions, and those produced therein when both keys are down, and reeds of precisely the same pitch and same phase of vibration are employed as supposed in the one hundred and seventeenth question, arises from the fact that in the latter case both reeds always move at the same rate and in the same direction, whereas, in the former case, they move always at different rates, and generally in different directions. Is that so?

Ans. Yes, whatever difference there is, is due to that fact.

Cross-Int. 119. If I understand your tenth and eleventh answers correctly, you mean to say by them that when intermittent currents are sent along the line and through the coil of a receiving electro-magnet, not only is a magnetic effect produced upon the core at each impulse or passage of current, but that effect requires an appreciable length of time to pass away, dependent upon the physical character of the electro-magnet, and that when these impulses succeed each other as often as say, one hundred times a second (which I believe is about the slowest rate of vibration produced in the air by a man's voice in ordinary conversation), the magnetic effect does not wholly pass away before a new impulse reaches the coil and begins to produce a new effect. Is that so?

Ans. Yes.

Cross-Int. 120. I understand further from your testimony, particularly those two answers, that under such circumstances, though some residual effect always remains, yet that the successive passage of these impulses through the coil produces a variation in the magnetic condition of the core which has its maximum and minimum at

3145

each impulse or cessation of impulse so affecting the coil. Is that so?

Ans. That is so.

Cross-Int. 121. Now, taking any apparatus in which the electromotive force is furnished by a battery, and in which the transmission or interruption is caused by a vibrating reed moving rapidly enough to satisfy the conditions above mentioned, and either with or without an induction coil interposed between the transmitter and the receiving electro-magnet, what will determine the relative strength of, that is the difference in strength between that maximum and minimum?

Ans. It will depend first upon the pitch or rate of vibration of the reed: the lower the rate of vibration, the greater the difference between the maximum and minimum magnetic strength. With an equal rate of vibration, it will also be affected by the duration of each contact. I am not sure what this effect would be without investigating the subject, but am inclined to think that the shorter the duration the greater the difference, at least within certain limits. It will also depend upon the rapidity with which the iron core of the receiving instrument is capable of being magnetized and demagnetized. Generally speaking, the shorter the core the more rapidly this will take place, and the greater will be the difference between the maximum and minimum of magnetic charge at each impulse. The number of convolutions and the resistance of the coil of the receiving instrument would also have some influence, though in which way I am not certain. I should say that the strength of the battery would have little or no influence upon the result referred to, unless the limit of magnetic saturation in the iron core was approached, as it might be if a strong current were used, in which case the difference between the maximum and minimum of the magnetization would probably be diminished.

Cross-Int. 122. With the apparatus referred to in my last question, what would determine the period of time between the instant when the magnetization (or demagnetization) passes from increase to decrease, and the instant when it next passes from increase to decrease?

Ans. This would be determined solely by the pitch or rate of vibration of the reed.

Cross-Int. 123. Then, if I understand you, both the extent of the variations in the magnetism of the receiver and the period of those variations will be determined by the physical structure and adjustment of the apparatus employed at the transmitting end, and of the electro-magnet at the receiving end. Is that so?

Ans. Assuming other conditions to be alike, yes.

Cross-Int. 124. Do you refer to any other conditions than those which depend upon the mechanical structure, materials and adjustment of the apparatus employed?

Ans. I do not.

Cross-Int. 125. And if, instead of employing one reed in a transmitter, you employ two reeds, then the extent and period of the variations in the magnetic condition of the receiving electro-magnet will likewise depend upon the materials, construction and adjustment of the apparatus, taking into view the effects referred to in the one hundred and fifteenth, one hundred and sixteenth, one hundred and seventeenth, and one hundred and eighteenth cross questions and answers, will they not?

Ans. They will.

Cross-Int. 126. Taking an instrument like any of the transmitters described in any of the patents of Mr. Gray which have been put in evidence, or like any of the instruments which you saw used as transmitters in New York, in the fall of 1875, on the occasions you have referred to, what produces the sound which is heard at the transmitting station?

Ans. The atmospheric vibrations set up by the vibrations of the transmitting reeds.

Cross-Int. 127. And what vibrates the transmitting reeds?

Ans. In the apparatus which I saw, the reeds were in all cases vibrated by an electro-magnetic device actuated by a battery. The arrangement, as shown in the patents referred to, is the same in this respect.

Cross-Int. 128. In all those instruments the sound waves which strike the ear are set in motion by the power of the apparatus, and are not the power which moves the apparatus. Is that so?

3147

Ans. That is so.

Cross-Int. 129. The apparatus itself produces simultaneously the sounds which are heard at both the transmitting and receiving stations, does it not?

Ans. It does.

[*By consent of the counsel for the complainants, the counsel for the defendant here puts in evidence an official copy of the patent No.* 173,460, *granted to Elisha Gray, Feb.* 15, 1876, *and the same is marked "Defendant's Exhibit, Gray's Organ Pipe Transmitter Patent, W. C. W., Examiner."*]

[1 *P. M., adjourned to* 2 *P. M.*]

2 P. M., *resumed.*

Cross-Int. 130. I understand that the object of the invention shown in the patent just put in evidence is to provide a vibrating automatic circuit breaker, more or less capable of taking the place of the vibrating circuit breakers used in the instruments and patents refered to in the one hundred and twenty-sixth cross-question, and that this transmitter operates to throw successive impulses upon the line, such as were thrown upon it by those apparatuses, and does this by making and breaking the circuit by the movement of a vibrating body, the main difference being in the means by which the vibrating body is caused to vibrate. Is that so?

Ans. I think your question expresses the substantial difference. It is simply a form of vibrating circuit breaker, which is actuated by air vibrations instead of by electro-magnetism.

Cross-Int. 131. Those air vibrations, which you refer to, are air vibrations which exist in an organ pipe when the pipe is blown by the organ bellows, after the ordinary manner of organs. Is that so?

Ans. That is so.

Cross-Int. 132. The power which causes them is furnished by the bellows, which forms an essential part of the apparatus. Is it not so?

Ans. It is.

Cross-Int. 133. The rate and amplitude of those vibrations are determined by the size and shape of the organ pipe which forms a part of the apparatus. Is it not so?

Ans. The rate of vibration is. I should suppose the amplitude

o be determined rather by the pressure of the air from the bellows than by peculiarities in the form of the pipe.

Cross-Int. 134. It is the power applied to the bellows of the apparatus, and the form and size of the pipe and its apertures, which create and give motion to the sound waves which strike the ear of the operator as sound, does it not?

Ans. It is.

Cross-Int. 135. And this apparatus, when connected up in lieu of the vibrating reed circuit breakers, is an apparatus which produces at the receiving station, and at the transmitting station, all the sound which is heard as connected with or incidental to the operation of the whole apparatus. Is it not so?

Ans. It is.

Cross-Int. 136. Please to look at your twenty-second answer, particularly the second sentence of it. Would not the apparatus you have imagined, if it were possible to make it, be one which would simultaneously produce articulate speech at both ends?

Ans. It would.

Cross-Int. 137. And it would not be an apparatus which would reproduce at the receiving end any speech or sound which had been produced at the transmitting end, by any means which did not form part of the apparatus itself, would it?

Ans. As I understand the question, it would not.

Cross-Int. 138. Please look at the last part of your seventeenth answer, where you refer to a transmitter composed of a plate of metal and a plate of carbon placed in contact with each other, and pressed more or less closely together by the action upon them of a vibrating diaphragm. How and where does the current pass, from what to what, in that form of transmitter?

Ans. The current passes from the plate of metal to the plate of carbon, and thence by a wire either directly to the receiving instrument or through the primary wire of an induction coil, the secondary wire of which extends to the receiving station. I have seen it used both ways.

Cross-Int. 139. How does the variation in pressure you there refer to effect the operation of that instrument?

Ans. By varying the resistance of the circuit at the place of

3149

contact of the two substances, which necessarily gives rise to a proportionate variation in the strength of the current traversing the plates.

Cross-Int. 140. If I understand your seventeenth answer, all the forms of transmitter you therein refer to (except the Reis instrument in its ordinary form) are instruments which form part of a circuit which is always closed and uninterrupted, and through which a current is always passing, and which do not make and break such circuit, but which operate to cause variations in the current by varying the resistance of that part of the circuit which the transmitter constitutes. Am I correct in that?

Ans. You are.

Cross-Int. 141. What is the name by which the transmitter therein referred to, consisting of two flat discs of carbon, is commonly known?

Ans. It is usually called the Fitch transmitter.

Cross-Int. 142. What is the name by which the device of three smooth wire nails there spoken of is commonly known?

Ans. It is one of quite a number of somewhat similar devices, that is, similar in principle, which are commonly called microphones.

Cross-Int. 143. By what name is the transmitter therein referred to, consisting of a plate of metal and a plate of carbon, commonly known?

Ans. It is known as the Edison transmitter, and generally as the "Carbon Telephone."

Cross-Int. 144. Please look at your twenty-fourth answer. Do you refer therein to any induction apparatus, except an induction coil through whose primary is passed a discontinuous current, substantially as shown in the Gray patent, No. 166,095, and in defendant's Exhibit Gray's Two-Tone Transmitter?

Ans. I do not.

Cross-Int. 145. In your twenty-sixth answer you describe two ways in which motion is produced or caused to continue in a vibrating body. Which of those ways is applicable to the second case proposed by the twenty-sixth question, namely, where such vibrations are set up by the impact of previously produced sound waves?

Ans. The second part of the answer.

Cross-Int. 146. Do you mean to state with reference to all vibrating bodies, that sound waves will not move them unless those waves strike them repeatedly, and at regularly recurring intervals which correspond with the rate of the vibration of the body or some multiple thereof?

Ans. No. I meant that statement to apply especially to bodies having a definite rate of vibration, or some one rate at which they vibrate more freely than at any other.

Cross-Int. 147. A pendulum, no matter what be the weight of its ball, has a definite rate of vibration according to its length, which may be said to be peculiar to that length, does it not?

Ans. That is so, taking the length of the pendulum as measured from the centre of gravity of the pendulum to the centre of oscillation.

Cross-Int. 148. If a momentary force is applied to such a pendulum and it is then left to itself, it will continue to vibrate for a greater or less time, depending upon the amount of force applied and the resistance the pendulum encounters in its swings, and the rate of such vibrations will be the normal rate of that pendulum. Is it not so?

Ans. It is.

Cross-Int. 149. If to such a pendulum you apply momentarily a force which is very small in proportion to the inertia of the pendulum, you will also get an oscillation which will have the same rate, but which will be extremely small, will you not?

Ans. Yes.

Cross-Int. 150. If now you repeat the application of that small force at regularly recurring periods of time which exactly agree with the normal period of oscillation of the pendulum, or some multiple thereof, you will cause the pendulum to swing with greater and greater amplitude but at its same normal rate, provided that the power which you apply each time is greater than that which is consumed by the resistance which the pendulum has to overcome during each interval, would you not?

Ans. Yes.

Cross-Int. 151. And I suppose the reason of these phenomena is that the persistence of the pendulum in its normal rate of vibration

3151

is such that it is easy to make it move at that rate and difficult to make it move at any other, is it not?

Ans. It is.

Cross-Int. 152. Do the same laws hold true with regard to a vibrating steel spring reed?

Ans. Substantially they do. I am not certain but that the degree of elasticity of the reed may have some influence upon it, in fixing its normal rate. In fact, I am quite sure that it does.

Cross-Int. 153. If now you apply to the same pendulum a force very great in proportion to its inertia, as, for example, if you should attach the bob of a light pendulum to the piston of a steam engine, you can force it to take up any rate of vibration, can you not?

[*Objected to as opening new matter.*]

Ans. Certainly, if the force is sufficient.

Cross-Int. 154. And whether the force is sufficient will depend, not upon the absolute amount of the force, but entirely or mainly upon the relation of its amount to the mass of the pendulum in the case of a pendulum, or its relation to the elasticity of a steel reed, if the thing to be moved were a steel reed, would it not?

[*Same objection.*]

Ans. It would.

Cross-Int. 155. That is, the force must be strong enough to compel the vibrating body to obey it, instead of being itself subservient to what I may call the independent will of the vibrating body. Am I right in that?

[*Same objection.*]

Ans. You are.

Cross-Int. 156. Referring now to the Bell telephones which you examined in the summer of 1877, and in which you spoke against a metallic diaphragm in the transmitting instrument, what do you understand to be the relations between the vibrations of that diaphragm and the sound waves which struck it when you spoke?

Ans. I understand it to be that the extent and character of movement of the central portion of the diaphragm towards and from the pole of the magnet corresponds with the amplitude of the sound waves which strike against and move it, in the same manner, if I may use

the illustration, as a floating object is caused to move up and down by the action of the waves or surface undulations beneath it.

Cross-Int. 157. What are the relations between them as to rate of vibration?

Ans. The rate of vibration is substantially the same and theoretically precisely the same. I presume the diaphragm does not perfectly respond to some portions of the most rapid vibrations.

Cross-Int. 158. And when the rate of vibration in the air changes, as the pitch of the voice changes, what takes place with regard to the vibrations of the diaphragm?

Ans. A corresponding change takes place in their rate.

Cross-Int. 159. The Reis telephone was an instrument in which the circuit was made and broken by the motion of one of two contact points through which the currents pass, which motion was imparted to it by its being attached to a membrane moved by the impact of the sound waves produced by the sound of the human voice, was it not?

Ans. It is so described in all the accounts which I have seen of it.

Cross-Int. 160. In your seventeenth answer you said that the apparatus known as the Reis telephone will transmit articulate sounds quite well, when a drop of liquid is placed between the contact points so as to prevent the circuit being absolutely interrupted at any time. What change would that drop of liquid make in the mode of operation of such an instrument, and why will it enable it to transmit articulate sounds?

Ans. The instrument as thus modified becomes capable of producing compound electrical waves, undulations or vibrations, having varying degrees of amplitude, that is to say, it admits of the strength of the current being varied by variation in the resistance to any degree between its maximum and zero. Without this modification, the strength of the current was necessarily either at its maximum or at zero, and no intermediate degree of strength was possible.

Cross-Int. 161. And I suppose that the important result and true meaning of that change is that the core of the receiving magnet could thus be compelled to take up any degree of magnetization between its maximum and minimum, corresponding to the varied

3153

position assumed by the contact point attached to the membrane in the motion which was imparted thereto by the sound waves proceeding from the mouth of the speaker. Is that so?

Ans. That, I think, is substantially it.

Cross-Int. 162. And that it would be compelled to change its magnetic condition as often and whenever the membrane, moved by those sound waves, changed its position?

Ans. Yes.

Cross-Int. 163. So that the changes in the magnetic condition of the receiving magnet, both as to their speed of succession in time and extent of variation in intensity, correspond to the motion given to the membrane by the voice of the speaker speaking against it?

Ans. Yes.

Cross-Int. 164. Such changes in the character of the electrical impulses which pass over the wire, corresponding to motions in a body caused by the impact of sound waves produced by the voice of the speaker at the transmitting station, are necessary to the electrical transmission of the articulate speech uttered by him, are they not, at least in our present state of knowledge?

Ans. They are.

Cross-Int. 165. Please look at the extract from Schellen which you put in this deposition in your twenty-eighth answer, particularly at the figure of the magnet therein shown. What is the relation between the length and diameter of those coils?

Ans. The length appears to be about one and a half times the diameter.

Cross-Int. 166. What is the relation between the length of the soft iron post, that is, from the end of the permanent magnet to the end of the core, and the length of the permanent magnet?

Ans. The permanent magnet is, I should judge, between five and six times the length of each one of the soft iron cores.

Cross-Int. 167. By that length of permanent magnet, you mean the whole length of both legs, and the connecting portions, measured from one pole all the way around to the other, do you not?

Ans. I do.

Cross-Int. 168. In the apparatus described in that extract from Schellen, I understand that this combined magnet was never used to

give motion to an armature, but first held it when laid upon its poles against the tension of a strained spring; then, when its magnetic force was diminished by a current sent through the coils in a reverse direction, relaxed its attraction upon the armature sufficiently to enable the spring to snatch it away, and then, when by means of the machinery the armature was mechanically replaced upon its poles, the magnet having recovered its power, in consequence of the discontinuance of the demagnetizing current, held it in that position, ready to be snatched away again when another demagnetizing current was sent through the coils. Am I right in this?

Ans. Your description of the operation is correct.

Cross-Int. 169. In the ordinary operation of that Hughes printing telegraph, of which that magnet forms a part, how much time elapses between the instant when the armature is snatched away from the magnet, and the instant when it is returned to its poles?

Ans. From one fifteenth to one twentieth of a second is the minimum time occupied.

Cross-Int. 170. Comparing that period with the period of one one hundredth of a second mentioned in your twenty-ninth answer, I judge that the great occasion for sensitiveness and promptness of action in that magnet is in the process of partial demagnetization which takes place when the weakening current is sent through the line by the action of the transmitter. Is that so?

Ans. Yes, I think that is it.

Cross-Int. 171. As I understand that apparatus, the only current which is passed through the coils of the magnet is the demagnetizing current, and the soft iron cores recover their magnetism by induction from the permanent magnet. Is that so?

Ans. It is.

Cross-Int. 172. Each current which is passed through the line to make a signal passes through similar magnets both in the transmitting and receiving instrument. Is it not so?

Ans. It is so represented in the diagram, and they were formerly worked in this way. I have observed that the more recent practice is to arrange the apparatus so that the transmitted currents pass through only one magnet, which is that of the receiving instrument.

3155

[*All statements as to the more recent practice objected to by complainants' counsel.*]

Cross-Int. 173. Dr. Schellen states in his description of that apparatus that the adjustment of the magnet has to be changed whenever the instrument is changed from sending to receiving, does he not?

Ans. He does.

Cross-Int. 174. Please look at your thirty-fifth answer, and describe particularly the instrument which you there say you tested, giving its construction, size, form, proportions and the material of which it was made?

Ans. The instrument was composed of a hollow spheroid of brass, of precisely the same shape and, as nearly as I can judge without measurement, of the same relative proportions as that shown in the drawing of the caveat. It was three or four inches long and two and a half or three inches in diameter at its largest part, with a mouthpiece or bell-shaped opening of about two inches in diameter. The opening at the opposite end was about two or two and a half inches in diameter and covered with a membrane of parchment clamped at its edges by a metallic ring. I do not distinctly recollect the size and form of the armature which was mounted in the centre of this membrane, but my recollection is that it was quite thin and light. The coils of the electro-magnet, I should suppose, were about an inch in length and in diameter. I have no idea what the length or resistance of the wire of the magnet coil actually was. The transmitter used was of the kind known as Edison's. I do not recollect the amount of battery used in the experiment, but it was small, probably about two Daniell's cells.

Cross-Int. 175. Referring again to the Hughes apparatus, was the magnet which has been spoken of used therein for the purpose of inducing currents by the motion of an armature in front of it?

Ans. It was not.

Cross-Int. 176, In your fourth answer you used sometimes the phrase "compound tone," and sometimes the phrase "composite tone." Did you use both of those words as having the same signification?

Ans. I did.

Cross-Int. 177. Is it your understanding that scientific men, dealing with the subject of acoustics, consider a compound tone the same as a composite tone, or make no distinction between the tones to which they apply those two words?

Ans. I am not aware that there is any particular distinction. Where I used the word "compound" in my fourth answer, I intended to convey the same meaning as where I may elsewhere have used the word "composite." I regard the latter as the most proper expression.

[*Adjourned to May* 16, 1879, *at* 10 *A. M.*]

[*May* 16, 1879, 10 *A. M.*, *adjourned to* 2 *P. M.*]

2 P. M., *resumed.*

Cross-Int. 178. Look at the one hundred and seventy-third question and answer. Immediately after the passage from Dr. Schellen, there referred to, he states that Mr. Hughes, in order to overcome the inconvenience referred to in the question, has made an alteration in the circuit arrangement by which the magnet of the transmitting instrument cuts itself out of the circuit during the latter part of the time during which each signalling current is sent. Is it not so?

Ans. It is.

Cross-Int. 179. Every transmitting instrument of Mr. Gray, shown in the instruments or patents put in evidence, which is intended for the transmission of more than one tone, is provided with branches equal in number to the tones which the instrument is capable of sending simultaneously with a vibrating circuit breaker in each of those branch circuits. Is it not so?

Ans. It is.

Cross-Int. 180. When one only of the circuit breakers or tone transmitters is operated in such an apparatus, its effect is to disturb the normal electrical condition of the branch and main line wire, and the magnetic condition of the receiving magnet, by the momentary impulse produced by the flowing of the current through the contact points, after which the line and the receiving magnet are left to themselves to recover their normal condition, until another disturbing impulse is given at the next contact. Is it not so?

Ans. It is.

3157

Cross-Int. 181. And these successive impulses operate in the manner described in the first part of your twenty-sixth answer, do they?

Ans. In the apparatus represented in the patent to Elisha Gray, No. 186,340, dated Jan. 16, 1877, the reed is set in action substantially in the manner stated in the first part of my answer to question twenty-six, but is kept in action by the repeated application of the same force. The same is true of the other patents and exhibits of Gray, although the precise manner of applying the force is somewhat varied.

Cross-Int. 182. I did not intend to inquire as to the vibration of the reed. I meant to ask whether the electrical and magnetic vibrations or changes were or were not changes which are caused by an impulse at each contact of the reed, the line and receiving magnet being left free to recover from it until the next impulse is given at the next contact. Is that the condition of things?

Ans. It is.

Cross-Int. 183. Now, I understand from your testimony that when the separate vibrations thus caused by each circuit breaker independently in its own branch come together or converge upon the main line wire, they will, if the apparatus is properly constructed, cause a complex vibration or change of condition there which will be the algebraic sum of the separate vibrations. Is that correct?

Ans. It is.

Cross-Int. 184. And I further understand you to say, particularly in your sixty-fourth answer, that these separate vibrations when they so converge will not form a complex vibration which is the algebraic sum of all the vibrations which before that convergence existed separately in the apparatus, unless the cells of the battery or batteries be so connected up that, *first*, each branch and vibrator shall have its own proper electro-motive force not sensibly diminished by the use of the other vibrators; and, *second* that when the currents from two such branch circuits converge together on the main line, the strength of the joint current shall be that due to the algebraic sum of the several electro-motive forces of the several currents. Is that so?

Ans. It is.

Cross-Int. 185. Please refer to your one hundred and sixty-third cross-answer. I understand from that, that the changes in the electrical condition of the line wire, and the magnetic condition of the receiving magnet of the apparatus therein referred to, would be graphically represented by the same curve which represented the motion of the platinum point attached to the membrane. Am I right in that?

Ans. You are.

Direct Examination resumed.

Int. 186. I understand that you desire to make a correction in your answer on the subject of the report you made to Mr. Orton; if so, you can do so.

Ans. In my answer to the eighth interrogatory, I stated, "that at the time of making this report I had no knowledge of the caveat which had been filed by Mr. Gray, Feb. 14, 1876, and that any question relating to that did not therefore enter into consideration." I have since recalled to mind, that although this statement is correct in reference to my first or informal preliminary report, a copy of this caveat was afterwards shown to me, and in my subsequent and more detailed report I did refer to it, as more fully confirming me in my original opinion in reference to the scope of Mr. Gray's inventions.

[*Same objection as to the fourth answer.*]

Int. 187. When you state in answer to the fourth interrogatory what you reported to Mr. Orton as the result of your investigations, do you refer to your preliminary report, or to your final one, or to both?

Ans. I referred to both. They were substantially the same, differing only in the amount of detail with which the subject was discussed.

Int. 188. In your answer to the forty-seventh cross-interrogatory you were asked whether you perceived any substantial difference between the telephone you saw at Boston, about the first of August, 1877, and any apparatus or instrument you had seen before your visit to Boston that summer. You answered that you did. State what substantial difference you refer to.

AMERICAN BELL TELEPHONE COMPANY, —

3859

Ans. I refer to the construction of the armature in the form of a thin plate or disc of iron, of much larger diameter than the pole or poles of the magnet, and so mounted as to be capable of responding to sonorous vibrations traversing the atmosphere, and of inducing corresponding magneto-electric currents or vibrations in a conducting wire.

Int. 189. In your answer to the sixty-fourth cross-interrogatory you stated what method or arrangement it is necessary to adopt in a telephonic apparatus, in order to make it certain that the height or amplitude of the compound waves shall at each and every point be equal to the algebraic sum of the heights and amplitudes of the various simple waves, which, or parts of which, occupy the same point; and in your answer to the seventieth cross interrogatory you referred to Gray's closed circuit patent, No. 186,340, dated Jan. 16, 1877, as containing an example of an apparatus which fulfilled these necessary conditions. Why is it that it fulfils them? And herein state why you say in the last named answer that this closed circuit patent should be taken in connection with his reed transmitter patent, 165,728, dated July 20, 1875.

Ans. It fulfils these conditions for the reason that each one of the reed transmitters controls a certain proportion of the total electro-motive force, and this wholly irrespective of the action of any other one of the reeds. Now, as the resistance of the main circuit remains practically constant, it is evident that the strength of current in that circuit is always exactly in proportion to the algebraic sum of the amplitudes of all the waves belonging to different series coexisting at any given moment. As the apparatus is arranged, this proportion is inverse, but this is a matter of detail which does not affect the general principle. I referred to the other patent mentioned for the reason that it shows in detail the construction and mode of operation of a reed transmitter adapted to and designed to be used with the arrangement of circuits described and shown in the closed circuit patent.

Int. 190. In your answer to the seventy-fifth cross-interrogatory, you explain the difference between the mode of operation of the arrangement shown in Gray's closed circuit patent, and the mode of operation where the respective batteries of the different trans-

mitters are in parallel branch circuits, the several batteries or sections of battery in the closed circuit patent being "connected in series, so that the electro-motive force of one section is added to that of another when the two are in action at the same time"; and in your answer to the seventy-eighth cross-interrogatory, you said that you had answered the seventy-fifth cross-interrogatory with a certain understanding of the laws of nature applicable to the pressure and flow of fluids which you had referred to in connection with an illustration which you used. I wish to know whether your statement of the operation of batteries placed in parallel branch circuits on the one hand, and batteries connected in series on the other, is made as matter of reasoning from the illustration above mentioned, or is a fact in electrical science known to you independently; if the latter, please state your means of knowledge.

Ans. It is a fact in electrical science very familiarly known to me by practical experiments, and is in fact a part of the common stock of knowledge relating to the subject. It was not derived from any reasoning based upon the illustration which I used, which upon reflection, I see to have been in one respect incorrect.

Int. 191. What respect is that?

Ans. In respect to my answers to the seventy-sixth and seventy-seventh cross-questions, in which I said that the pressure would not be increased by enlarging the opening in a horizontal direction. Of course it would increase the absolute pressure, but not the pressure per square inch.

Int. 192. I do not know that you have said distinctly whether or not the apparatus which was exhibited by Mr. Gray, with your assistance, in New York, in 1875, fulfilled the same requirements which were fulfilled by the apparatus in Gray's closed circuit patent, being those mentioned in the answer to sixty-fourth cross-interrogatory. Please do so now.

Ans. The apparatus exhibited in 1875 did fulfil these requirements in every respect. The arrangement of the transmitters was precisely that shown in the patent, but during a portion of the time a common or universal receiver was used, as I have stated in my direct testimony.

Int. 193. In your answer to the ninety-sixth cross-interrogatory,

3161

you say it is practically true of all speaking telephones that you know of, that the entire circuit or circuits through which any electrical currents or impulses are caused to pass while the instrument is in operation is uninterrupted during the whole time a message is being transmitted. Was this true of the apparatus exhibited by Mr. Gray, with your assistance, in New York, in 1875?

Ans. It is true as to the circuit or circuits through which the impulses pass which produce the effect upon the receiving instrument; the shunt circuits as they are termed, which do not form a portion of the main line, are opened and closed by the circuit breakers attached to the transmitters.

Int. 194. In the one hundred and thirty-seventh cross-interrogatory, you were referred to an apparatus which you said in your twenty-second answer you thought might be made for the reproduction of articulate speech, by a proper combination of sounds upon a universal receiver, through an electric circuit, by means of mechanical transmitters; and you were asked whether it would be an apparatus which would reproduce at the receiving end any speech or sound which had been produced at the transmitting end by means not forming part of the apparatus, and you answered, as you understood the question, that it would not. Will you look at the paper which was put in evidence for the defendant at page 220 of the printed record, marked "Defendant's Exhibit Second Extract from Bell's London Lecture," and states whether that describes an apparatus operating substantially like that supposed in your twenty-second answer above referred to, or in what respect differing therefrom in operation?

Ans. The apparatus in each case consists of a number of reeds, each having its own pitch or rate of vibration, and when set in action, each reed transmits electrical waves or impulses over the line, corresponding to its own rate of vibration. The difference between the two consists in the manner in which the electrical impulses are generated. In the case of my hypothetical apparatus, I supposed them to be generated by a battery and thrown upon the line by the vibrations of the reeds, as in Gray's closed circuit patent. In the apparatus described in the Exhibit Second Extract from Bell's Lon-

3162

don Lecture, they are generated by the magneto-electric action of the vibrating reeds.

Int. 195 (*de bene*). In the one hundred and fifty-third cross-interrogatory you were asked whether, if you applied to the pendulum "a force very great in proportion to its inertia, as, for example, if you should attach the bob of a light pendulum to the piston of a steam engine, you can force it to take up any rate of vibration," and you answered, "Certainly, if the force is sufficient." Now, with reference to this subject of a light pendulum, with its free end attached to an independently reciprocating or vibrating body, will you state whether the pendulum necessarily vibrates either at its own rate or at that of the body to which it is attached, and give such illustrations or explanations as will make your meaning clear?

Ans. In my opinion, it does not necessarily so vibrate. For example, we might suppose the piston to move freely in the cylinder without any steam pressure being applied, so that the movements of the piston would correspond to and be controlled by the movements of the pendulum. Now, if a small but gradually increasing amount of steam were let into the cylinder, it would interfere more and more with the normal movement of the pendulum, and would at length become strong enough to control its movements; but in passing from one state of motion to the other, there would be a time when the two forces would be, as it were, struggling for the mastery, and the actual movement of the whole apparatus would be more or less irregular, and differing from that proper either to the piston or to the pendulum. So that the result which we should get by coupling together two unlike forces of this character would depend upon conditions variable in their nature, that is to say, upon the relative energy of the antagonistic forces.

Int. 196 (*de bene*). To get your meaning more clearly, I would suppose that the pendulum is attached at its free end to the centre of a diaphragm of stretched membrane, which is set in vibration by sound waves produced by the human voice. Will you state on what conditions, either in the membrane or in the pendulum, it will depend whether the pendulum takes its own rate of vibration, or takes that of the membrane, or takes a cross between the two?

Ans. If the rate of vibration communicated to the membrane by

2162

the human voice, or other external force, should correspond with the normal rate of vibration of the pendulum, then the membrane would communicate its movements to the pendulum. The amplitude of the vibration would depend upon the weight and inertia of the pendulum. When the rate of vibration of the membrane differs from that proper to the pendulum, the resultant motion will depend upon the proportion between the force which vibrates the membrane and the weight of the pendulum. The less the latter, in proportion to the former, the more nearly will it follow its movements.

Int. 197. I wish to ask you a question which was omitted by inadvertence in the examination in chief. There occurs in the answer in this case a reference to Alfred G. Holcomb, now of Granby, Conn., as having used at the city of New York some part of the subject matter specified as of Bell's invention, in his patent of 1877. I understand Holcomb's use to have been the use of a permanent magnet with short coils thereon, as referred to in the eighth claim of Bell's patent. Please describe, if you know the fact, what the instrument was that Holcomb so used, and when it was used.

Ans. Mr. Holcomb showed me this instrument, either in the year 1860, or prior to the first of May, 1861. The instrument was designed as a receiving instrument or relay for the ordinary Morse apparatus. It consisted of a compound permanent magnet, built up of two or three leaves, with a soft iron core screwed into each of its poles, upon which cores were placed helixes or coils of insulated copper wire, the arrangement thus far being substantially the same as that shown in Fig. 356 of Schellen's book, and in the defendant's Exhibits Bell Telephones A and B. In front of the soft iron cores was a flat armature suspended in the magnetic field upon a tightly strained steel wire which acted as a spring. When currents of electricity were transmitted through the coils, the normal magnetism of the cores was increased or diminished according to the polarity of the current, and the armature caused to vibrate to and fro in the magnetic field. I know nothing about the actual use of this instrument, but the one which I saw was a complete and well finished instrument in every respect, and its operation was explained to me by Mr. Holcomb.

Int. 198. Was the operation in combination of the magnet with its short coils and the armature suspended in the magnetic field in this instrument of Holcomb's substantially the same, in your opinion, as the operation in combination of the magnet with short coils and the induction armature in the Bell patent of 1877, as referred to in the eighth claim thereof?

Ans. It was.

Cross Examination resumed.

Cross-Int. 199. Did you actually connect up that apparatus of Holcomb's with a battery, and work it?

Ans. I have a faint recollection that Holcomb did, in my presence, but cannot say positively at this distance of time.

Cross-Int. 200. You didn't understand that it was to be used as a magneto-machine to induce currents by the motion of the armature, did you?

Ans. I did not.

Cross-Int. 201. With reference to the matters inquired of in the questions one hundred and ninety-five and one hundred and ninety-six, I understand you to mean that the ability of the pendulum to overcome the force applied to it by a body moving or tending to move at a different rate from that normal to the pendulum depends upon the weight of the pendulum, assuming the power to remain unchanged. Is that so?

[*Objected to*]

Ans. Yes, that is my meaning.

Cross-Int. 202. Suppose the moving power were attached to the pendulum and set in motion by its own force, when the pendulum was at rest and at the bottom of its swing, how would the normal rate of the pendulum affect the motion or rate of speed at which the apparatus started off?

[*Same objection.*]

Ans. It would have very little effect upon it.

Cross-Int. 203. I suppose that the resistance from the weight of the pendulum in such a case would be due to two causes, — one, the inertia of the mass, which must be overcome, and the other the effect of gravity, resisting the perpendicular rise which the pendulum bob has to be caused to take, when it swings away from the perpendicular. Is that so?

3165

Ans. Yes.

Cross-Int. 204. Then the amplitude of the vibration, which the pendulum is to take, would also have a great effect on the amount of its resistance, which by this action of gravity would increase much faster than the length of the arc, being represented by the versed sine of the arc. Is it not so?

Ans. That is so.

Cross-Int. 205. Therefore, if I understand, you can diminish the resistance which the pendulum offers to such a force, so acting upon it at a rate different from its own, by diminishing the arc through which it is compelled to swing, as well as by diminishing its weight. Is that so?

Ans. That is so.

Cross-Int. 206. Please to look at the one hundred and ninety-third question and answer. Is it not true of every apparatus of Mr. Gray, which has been put into the case, or which is described in any patent which has been put into the case, that the circuit in which the transmitter is placed is not kept continually closed, but is alternately broken and closed by the action of the transmitting circuit breaker?

Ans. It is.

Cross-Int. 207. Is it not true of every such apparatus, that it is essential to the transmission of tones, or of their production at the receiving end, that the circuit in which the transmitting instrument is so placed should be alternately open to the passage of a current proceeding from the main battery, or closed to the passage of such current by the action of such circuit breaker?

Ans. It is not essential, because the same effect would be produced if the circuit breakers merely increased and decreased the resistance of the circuits in which they were placed. In this case, with the same battery power, the actual amplitude of the simple and composite vibrations would be less, but would relatively remain the same, and the same sounds would be produced upon the receiving instrument, only not so loud.

Cross-Int. 208. Is there any apparatus of Mr. Gray's which has been put into this case, or which is shown in any patent put into this case, in which "the circuit breakers merely increased and

decreased the resistance of the circuits in which they were placed," or is there any such apparatus of his in which they did not absolutely break, and open at each vibration the circuit in which they were placed?

Ans. None that I know of.

Cross-Int. 209. Please look at the one hundred and ninety-fourth question and answer. Does that description in Mr. Bell's lecture show that any mechanism is to be applied to the reeds of his transmitter to actuate them, or does it show that they are to be moved simply by the impact of sound waves generated in the air outside the instrument, and by the human voice?

Ans. His intention is stated to have been to actuate the apparatus by sound waves produced by the human voice. It does not show any mechanism for actuating them.

Cross-Int. 210. In the apparatus which you imagined in your twenty-second answer did you suppose, as part of your hypothesis, that the transmitting instrument was to receive its motions simply by the impact of sound waves upon the reeds or some other of its parts, or did you intend to refer to an apparatus in which the motions in the transmitter should be caused by mechanical means, such as the action of cams or magnets, as distinguished from the human voice?

Ans. I had in mind an automatic mechanical transmitter.

FRANK L. POPE.

Attest: WM. C. WITTER, *Examiner.*

BOSTON, May 21, 1879.

[It is admitted by counsel for complainants that the defendant's Exhibit Bell Telephone A, and defendant's Exhibit Bell Telephone B, were made by the complainants or their predecessors under the Bell patents, in June, 1877, and by them loaned to Mr. Anson Stager during that month.]

Attest: J. HENRY TAYLOR, *Special Examiner.*

3167

EVIDENCE FOR COMPLAINANTS IN REPLY.

TAKEN PURSUANT TO THE SIXTY-SEVENTH RULE OF THE SUPREME COURT OF THE UNITED STATES, IN EQUITY, AS AMENDED, BEFORE ME,

W. P. PREBLE, Jr., *Examiner.*

Present: J. J. Storrow, Esq., and Chauncey Smith, Esq., *of Counsel for Complainants;*
Causten Browne, Esq., and W. D. Baldwin, Esq., *of Counsel for Defendant.*

DEPOSITION OF CHARLES R. CROSS.

Direct Examination by J. J. Storrow, Esq., *of Counsel for Complainants.*

Boston, June 17, 1879.

Int. 1. What is your name, age, residence, and occupation?

Ans. Charles Robert Cross; age, thirty-one; residence, Boston, Mass.; occupation, Thayer Professor of Physics at the Massachusetts Institute of Technology, Boston.

Int. 2. Please to look at the telephones now shown you, marked "Membrane Telephones, No. 2; Transmitter and Receiver." Give a general description of them, and state how they compare with the defendant's Exhibits, Bell "Apparatus of 1876 patent, Transmitter and Receiver."

[*Complainants' counsel puts in evidence the two telephones referred to, which are marked "Complainants' Exhibits* 15 *and* 16, *Membrane Telephone, No.* 2, *W. P. Preble, Jr., Examiner.*"]

Ans. The transmitter consists of a truncated cone, with a membrane tightly stretched across its smaller extremity, the cone being made of sheet iron, and about six inches in length. The membrane is about three and a half inches in diameter, and at its middle point is connected with an armature, so hinged that when the

membrane is set in vibration it shall move to and fro in front of the pole of an electro-magnet. It is hinged to a piece of iron connected with that pole of the electro-magnet which is farthest from the membrane. The length of the armature is about two inches.

The receiving instrument consists of a cone of sheet iron about six inches in length, the smaller end of which is about half an inch in diameter, the larger end about three and a half inches in diameter and closed by a membrane. To the central point of this membrane a vibrating armature is attached, mounted before an electro-magnet in the same manner as in the transmitting instrument. These instruments are close copies of the two defendant's exhibits referred to in the question.

Int. 3. Have you ever tried to transmit articulate speech with this pair of telephones, Nos. 15 and 16, and if so, under what circumstances, and with what result?

Ans. I have tried a large number of experiments with these, and certain other telephones of similar construction. The following are the general circumstances under which these experiments took place. The transmitter was placed in room No. 42, Union Building, on State Street, Boston; the receiver was placed in the office of Mr. J. J. Storrow, in the same building, a story lower. The two rooms are separated by an open court, about one hundred feet long, so that no sound was transmitted through the air. The windows were kept tightly closed during the experiments. I was at the receiving end through most of the experiments. My assistant in the department of physics in the Massachusetts Institute of Technology, Mr. J. B. Henck, Jr., was at the transmitter. The battery used was three Bunsen's cells, with chromic acid solution in the porous cups. The first experiments were made June 5, 1879. The messages were sent from the transmitting to the receiving end through a wire connecting the two instruments. A second wire was used for a return circuit. My results were verified by having the message repeated through a second circuit, embracing two ordinary hand telephones. Several different persons spoke into the transmitting instruments. With the telephones described, and marked "15 and 16," singing, laughing and articulate speech were transmitted so as to be clearly understood. Both sentences and regular and irregular count-

3169

ing were distinctly understood at the receiving end. In several cases I recognized the voice of the person speaking. Afterwards I went to the transmitting end and communicated with Mr. Henck at the receiving end.

Int. 4. Please look at the telephones now shown you, and marked "Complainants' Exhibits 17 and 18, Baby Membrane Telephones." Give a general description of them, and state whether you have ever attempted to transmit articulate speech with them, and under what circumstances and with what results.

[*Complainants' counsel puts in evidence two telephones, marked "Complainants' Exhibits Baby Membrane Telephones, 17 and 18, W. P. Preble, Jr., Examiner."*]

Ans. The transmitter is of the same general construction as the transmitter already described, but differs greatly in size. The same is true of the receiving instrument. The cone is of wood about an inch and a half in length, and the large end about an inch and a half in diameter — the membrane not quite an inch in diameter. The vibrating armature is half an inch in length, and the electro-magnet is of proportionally small dimensions. The cone of the receiving instrument is also of wood, about an inch and a half in length; the large end, which is closed by a membrane, is not quite an inch in diameter. The armature and electro-magnet are of the same size as those of the transmitter. These instruments have the same dimensions as those represented in a certified tracing from the drawings in the original specification of Fig. 7, of Bell's patent, 17 4,465, March 7, 1876. The general arrangements for the experiments with these telephones in actual use were the same as those already described, the trial being made on the same day. Several distinct sentences were transmitted, until I was perfectly satisfied that they were capable of transmitting articulate speech.

Int. 5. Please to look at the pair of telephones now shown you, marked "Complainants' Exhibits 19 and 20, Lover's Electric Telephones." Give a description of them, and if you have ever tried to transmit articulate speech with them, state under what circumstances and with what result?

[*Complainants' counsel offers in evidence two telephones, marked*

"*Complainants' Exhibits* 19 *and* 20, *Lover's Electric Telephones, W. P. Preble, Jr., Examiner.*"]

Ans. Both the transmitter and receiver, which are of precisely similar construction, are made from the cylinders and attached membranes of the ordinary lover's telegraph as sold in the street. To these, magnets and vibrating armatures have been attached, as in the telephones already described. The membranes are about an inch and a half in diameter, and are mounted upon tin tubes about two inches long. The armature is an inch in length. The experiments in the transmission of speech with these instruments were conducted in the same general manner as those already described. Sentences and counting were distinctly transmitted, and in both directions. The same experiments were repeated on a later day with even better results.

Int. 6. State whether or not you found any change in the facility with which articulate speech could be transmitted by the three pairs of telephones you have just described after you had used them continuously for any considerable length of time?

Ans. In several instances I found that as them embrane of the transmitter became moist from the breath, in which case it grew lax and lost its elasticity, the articulation became less distinct. I noticed on one occasion that in the lover's telegraph instrument the membrane of the transmitter grew damp and articulation was impaired. On transferring the magnet and armature to a new cylinder with a dry membrane the articulation again became clear and distinct.

Int. 7. Please look at the pair of telephones now shown you, marked "Complainants' Exhibits 21 and 22, Adjustable Membrane Telephones." Describe them, and if you have ever tried to transmit articulate speech with them, state under what circumstances and with what results.

[*Complainants' counsel puts in evidence a pair of telephones, marked "Complainants' Exhibits* 21 *and* 22, *Adjustable Membrane Telephones, W. P. Preble, Jr., Examiner.*"]

Ans. The general construction of both transmitter and receiver is the same as that of the telephones, complainants' Exhibits 15 and 16. They differ, however, from the latter in having an arrangement whereby the tension of the membranes can be varied. The membrane in

3171

each is attached to a wooden ring which slides over a second wooden ring. By turning three screws connecting the two wooden rings, the membrane can have its tension increased or diminished at will. The instruments described were first experimented with June 9, 1879. I began by having the membranes of both instruments slightly stretched, in which case faint articulation was heard, the words being frequently understood. On slackening the membranes still further the words became indistinguishable. When the person at the transmitting instrument counted before it, a noise was heard which as nearly as I can represent it in words was as follows: "Boop, boop, boop, boop-boop, boop-boop, a-hoop, a-hoop, a-hoop,"— one sound for each syllable. I then asked the person at the transmitter to pluck the armature with his finger. The sound produced at the receiver can be represented by the words: "Boop, boop, boop, boop." The circuit was then made and broken by hand, giving noises, "Dub, dub, dub, dub." The magnet was then drawn so far from the membrane that even when the current passed, the membrane was still very lax. When my assistant spoke into the transmitter, I heard a noise which I recognized as a voice, but very faint. No words could be distinguished. As my assistant counted I heard the noise, "Boop, boop, boop-boop," — one word for each syllable.

On tightening the membrane, this effect ceased, and articulation was apparent. The membranes were then tightened and the metal cones removed from both instruments. Many sentences were then clearly transmitted between the two stations. In some additional experiments with this telephone performed June 10, 1879, a cornet was sounded before the membrane of the transmitter, the cones having been removed from both transmitter and receiver. The notes were heard at the receiver, but a difficulty arose, as the loud sound of the cornet could also be heard through the air, and it was somewhat difficult to distinguish the notes coming from the telephone from the notes thus heard through the air. On putting the iron cone on the receiving instrument to remedy this difficulty by shutting out extraneous sounds, the various tones of the cornet were heard very clearly in all their modulations. The best results with the cornet were reached when the cone was also on the transmitter. The cornet was also tried with the tele-

phones 15 and 16, whose diaphragms are not adjustable, the various tones being perfectly audible when notes of different pitch were sounded.

Int. 8. State whether or not the method of straining the membrane, adopted in Exhibits 21 and 22, is or is not old and well known; and if so, give some instances of its use.

Ans. The method used in straining the membrane is very well known, being substantially that which is adopted in the kettle-drum, banjo, and most instruments in which membranes are used. It has also been largely used in instruments which like the phonautograph are designed for experiments upon the various sounds produced by the voice.

Int. 9. Please to look at the instruments now shown you, marked "Complainants' Exhibits 23 and 24, Hand Telephone Membranes," and describe them. If you have ever attempted to transmit articulate speech with them, state in what manner, under what circumstances, and with what results.

[*Complainants' counsel offers in evidence two instruments, marked "Complainants' Exhibits 23 and 24, Hand Telephone Membranes, W. P. Preble, Jr., Examiner."*]

Ans. The instruments exhibited consist each of a membrane stretched over a wooden ring whose inner diameter is about an inch and three quarters. In each of these an armature a little over an inch in length is used, it being hinged at the extremity nearest the wooden ring, while the other end is about opposite the centre of the membrane and firmly connected with the membrane at that point, so that if the membrane is set in vibration the armature will vibrate with it.

The cover, mouth piece, and diaphragm were removed from each of a pair of ordinary Bell hand telephones, the magnet being drawn backward so that when the metal plate was replaced by the membrane and attached armature, the armature could vibrate opposite the pole of the magnet without striking it. In the experiments performed with this apparatus the same general arrangements as to place, length of line wire, battery power, etc., were used as in the various experiments with different telephones previously described. One of the hand telephones, modified as described, was used as a

3123

transmitter, the other as a receiver. With these messages were transmitted in both directions so as to be clearly understood.

I produce in evidence the two hand telephones used in this experiment, one of them with the cap piece lengthened out so that it can be screwed down over this membrane diaphragm, the other being left in its ordinary condition.

[*Marked "Complainants' Exhibits 25 and 26, Bell Hand Telephones, W. P. Preble, Jr., Examiner."*]

Int. 10. State whether in these experiments you tried to transmit articulate speech through any or all of the membrane telephones put in evidence today, while holding the membrane and armature horizontal as well as perpendicular, and if so, with what results?

Ans. A number of experiments were tried with the adjustable membrane telephones, Nos. 21 and 22, in which both transmitter and receiver were so held that the membranes and armatures were horizontal without producing any perceptible change in the distinctness of the articulation.

Int. 11. State whether or not any or all of the membrane telephones, Nos. 15 to 24, inclusive, transmits articulate speech sufficiently well to be of practical utility for the purposes of such transmission.

Ans. If we had no better speaking telephones, I should consider these of very great practical utility.

Int. 12. State whether or not these membrane telephones, Nos. 15 to 22, inclusive, are constructed in substantial accordance with the drawing, Fig. 7, of the Bell patent 174,465, of March 7, 1876, and with that part of the specification of said patent which specifically refers to said drawings.

Ans. All of the instruments enumerated are constructed in substantial accordance with the drawing and specification referred to.

Int. 13. State whether or not the hand telephones, Nos. 25 and 26, when mounted with the membranes, 23 and 24, in the manner you have described and used, as described by you with a battery, are constructed in substantial accordance with said drawing and said part of said specification, so far as their electrical and acoustic conditions are concerned, leaving out of view the fact that the two hand telephones

are provided with permanent magnets and peculiarly formed mouth pieces.

Ans. They are.

Int. 14. Please to describe the principle and mode of operation of the two iron cone membrane telephones, 15 and 16, when connected up with a battery, and used by you for the transmission of articulate speech in the manner you have described, and the mode in which they operate to produce the results you obtained with them.

Ans. Through the influence of the vibrations of the air produced in its vicinity, the membrane of the transmitter, together with the attached armature, is forced to move in a manner corresponding to that in which the vibrating air particles are themselves moving. These vibrations of the armature which is opposite the pole of an electro-magnet, in accordance with the well-known laws of electricity and magnetism, tend to produce currents in the coils surrounding the cores, and hence in the line wires, chiefly by varying the magnetic condition of these cores. These currents are dependent in strength upon the position and velocity, and in direction upon the direction of the motion of the armature. There are thus produced variations in the strength of the current traversing the circuit which are immediately dependent upon and correspond to the character of the vibration of the armature; that is, the currents produced by the vibrating armature are added to or subtracted from the constant battery current, according to the direction of the motion of the armature, so that the total strength of the line current is constantly varying in exact accordance with the variations in the direction and velocity of the motion of the armature. The core of the magnet of the receiver is made magnetic, or has its magnetic condition varied, by the current passing through its coils, and every change in the strength of this current must produce a corresponding change in the magnetic condition of the core. Finally, these variations in the magnetic condition of the core of the magnet of the receiving instrument, causing the armature to be attracted with varying force, produce vibrations in this, together with the attached membrane, the armature being drawn further towards the magnet when the strength of the latter is increased, and allowed to recede when the strength is diminished. In this way the armature and attached membrane of

3115

the receiver are caused to assume motions which correspond to, because immediately dependent upon, the varying magnetic condition of the core, and as the variations of the magnetic condition of the core correspond to the vibrations of the membrane and attached armature of the transmitter, which create them, the membrane of the receiver reproduces the vibrations of the membrane of the transmitter with all their variations. The air in the vicinity of the receiver is thus impressed with vibrations similar to those which were originally imparted to the transmitter, and hence the vocal or other sounds uttered at the transmitting station are perfectly reproduced.

Int. 15. You speak of the vibrations of the air, which constitute or are caused by the sound uttered by the speaker at the transmitting station. Please state generally what are the vibrations in the air which constitute sound, taking the case of a simple or pure sound, such as is produced by the vibration of a tuning fork.

Ans. In the case of a simple vibration, such as that produced by the tuning fork, the motion of a particle of air is a swinging to and fro. The velocity increases from the extreme limit of its swing to its middle point, then gradually decreases until the extreme limit in the opposite direction is reached. The direction of the motion is then reversed, and the same variations in velocity again recur. The motion of such a particle is very simple, and can be graphically represented by the curve known as the sinusoid. The direction of the motion changes but once in a complete vibration, and at the end of the swing only.

Int. 16. Considering now that motion of an extremely small mass of air, which for convenience I will call an air particle (not meaning by that what is called a molecule), which constitutes the vibration which strikes the ear as sound, what is the amplitude and frequency of such motions or vibrations which become sensible to the ear as sound?

Ans. The amplitude of the vibration of such particle is excessively small. The only attempt at determining the amplitude that has ever been made, so far as I know, was that of Lord Rayleigh, who estimates it as being one ten millionth of a centimetre. The number of vibrations of notes perceived by the ear varies from

about twenty in the gravest perceptible sound to twenty or twenty-five thousand vibrations per second in the case of the most acute sounds which the ear perceives. In using the term "vibration," I refer to what are known as double or complete vibrations, which have been called "swing-swangs."

Int. 17. Is the amplitude of the motion always the same, and if not, what is the effect of varying the amplitude?

Ans. For a sound of any given pitch, an increase in the amplitude causes increased loudness, while a diminution of the amplitude has the opposite effect.

Int. 18. What determines what is called the pitch of a sound?

Ans. The frequency of vibration, that is, the number of vibrations performed in a given time.

Int. 19. What number of vibrations per second correspond to the pitches recognized in ordinary conversation of men and women?

Ans. The number of vibrations per second of the fundamental of the sounds used in ordinary conversation varies from one hundred to five hundred.

Int. 20. What is it that distinguishes from each other the various sounds produced by various instruments, such as a violin, cornet or human voice, and which distinguishes those sounds from the simple sound of the tuning fork, when all are of what we call the same pitch?

Ans. These differences are what are called differences in *timbre* or quality. In general, when any instrument is sounded, several notes are produced simultaneously; the lowest of these is called the fundamental of the sound, the others the overtones. It is upon the number, position in the musical scale, or pitch, and relative intensity of these various overtones that the quality of any note depends. In the case of a tuning fork, when bowed at the extremity, only a single note, the fundamental, is produced, while in the case of most instruments there are simultaneously produced, besides the fundamental, a greater or less number of overtones by which the characteristic quality is determined.

Int. 21. What is it that constitutes the difference in sound when a violin string is plucked instead of being bowed, or is bowed in different ways?

3177

Ans. These differences are also differences in quality, caused by a difference in the pitch, number and relative intensity of the overtones present. Where a string is plucked, the higher overtones are in general brought out with a greater proportionate loudness than when it is bowed. There are also differences dependent upon the mode of beginning and ending of the sounds which are noticeable in certain of these cases, the latter being what Helmholz has called the non-musical characteristics of *timbre*. In all of these cases of musical sounds, the note is really very complex, being compounded of a fundamental and different overtones, to which combination the characteristic quality of the sound is due.

Int. 22. Which of the tones of this combination determine what is called the pitch of the sound?

Ans. In general the pitch of the sound is determined by the fundamental.

Int. 23. What is it that distinguishes the sound of one voice from the sound of another voice, when they both utter the same vowel at the same pitch, or which distinguishes one vowel sound from another vowel sound when both are uttered by the same voice at the same pitch?

Ans. These again are differences in quality of the sound in question. As in the preceding cases, variations in the number, pitch and relative intensity of the overtones present determine the quality.

Int. 24. What is it that distinguishes one syllable from another, in articulate speech, when both are uttered by the same voice and in the same pitch?

Ans. This same difference of quality, as explained in the preceding cases.

Int. 25. You say that all sound is produced by to-and-fro motions of what we have called air particles. What is there in the motion of these particles which determines the quality of the sound, in the sense in which you have described it?

Ans. In the case of a simple sound, the particle possesses a simple motion, which can be represented graphically by a sinusoid. The direction of the motion changes but once in a complete vibration, and only at each end of the swing. The motion is of precisely the same character as that which seems so regular in the pendulum, that is, it

follows the same mathematical law. In the case of a more complex sound, as, for example, when the particles are vibrating under the influence of the voice, the motion is far more complex; the particles do not simply swing to and fro, as does a pendulum, from one point to another, but undergo changes in the velocity and direction of their motion, in a very peculiar and complex manner. Between one extremity of their swing and the other extremity, their motion may change its direction very frequently, and the velocity, instead of varying regularly as in the pendulum, varies in a manner which, as compared with the motion of the pendulum, is very irregular. All of these motions are in the same line, there being no lateral motions whatever, and they all take place in the direction in which the sound wave is travelling.

Int. 26. Take the case of one air particle, as we have called it; what is its absolute motion at any one instant and at successive instants?

Ans. Its absolute motion is, of course, at any one instant, in a fixed direction, and with a definite velocity. At any succeeding instant the velocity and direction may either or both be different, and in general, a number of changes of direction occur during each complete periodic movement.

Int. 27. What is meant by the graphical representation of vibrations?

Ans. Any vibration can be graphically represented in the following manner. Two lines, OX and OY, are drawn at right angles to one another, as in the annexed sketch.

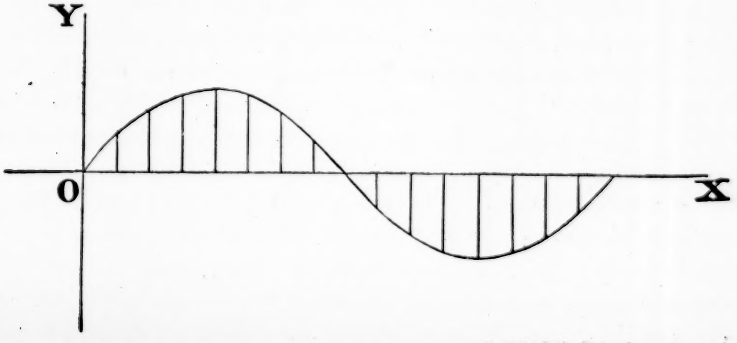

99

3179

OX is divided into a number of equal spaces to represent equal intervals of time, the length of these spaces being purely arbitrary. The distances from O to the beginning of any one of these divisions are called abscissas. From each of these points on X representing successive intervals of time, a line is drawn parallel to OY, and proportional in its magnitude to the distance of the particle from its normal position when at rest. These lines parallel to OY are called ordinates. By drawing a continuous curve through the extremities of these ordinates, we shall get a graphical representation of the motion of the particle, because if we lay off any abscissa denoting the time from the beginning of the motion of the particle, the corresponding ordinate will represent the position of the particle corresponding to that time. It is to be remembered that this is merely a geometrical mode of representing variations in the motion of a particle, and not a representation on paper of the actual path which the particle pursues; thus in the case of the vibration of the particle of air, when a simple sound is produced, the actual path of the particle is simply an oscillating to and fro in a certain straight line. Its motion will be graphically represented, however, by a sinusoidal curve, similar to that shown in the diagram.

Int. 28. Have you some curves drawn by these sound waves, or vibrations of the air, produced by sound? and if so, please present them. State when, where and how they were made, and by what instrument.

[*Adjourned to June* 18.]

BOSTON, June 18, 1879.

Ans. I have here a number of curves which were drawn directly through the agency of vibrating particles of air; also a single set of curves illustrating the simpler vibrations of a tuning fork. I have caused heliotype prints of these to be made, of which the annexed plates are specimens. The curves as originally drawn were used as negatives from which a photographic reproduction was made upon the gelatine films used in heliotyping, so that the curves as heliotyped in the plates are perfect facsimiles of the original curves.

Considering the curves illustrating the vibration of a tuning fork shown in the various tracings of plate *I*, the manner of drawing was as follows: A style was attached to the extremity of one prong of

3180

a tuning fork, which was then set in vibration. Under this style a plate of smoked glass was placed so that when the plate was drawn in a direction at right angles to that in which the vibrations of the fork took place, a line was drawn upon the plate by the removal of the lamp-black. When the fork was at rest and the lamp-blacked plate drawn under it, as described, a straight line was produced. This is shown at *c*, Fig. 1, Plate I. When the fork was so vibrated as to produce only its fundamental tone, a sinuous line, shown at *a*, Fig. 1, Plate I, was produced. This curve is a sinusoid. The distance between successive points of the sinusoid is determined simply by the velocity given to the glass plate. This will be noticed by an inspection of the curve *a*, Fig. 1, Plate I, in drawing which the velocity of the glass plate was not exactly constant throughout its whole motion. The curve *b* in the same figure was produced by causing the tuning fork to give forth only its first overtones. The higher pitch of this overtone is made evident by the greater number of sinuosities in a given interval, while the less amplitude of its vibration is also clearly shown. When the fork was caused to give forth simultaneously its fundamental and first overtone, curves *e* and *d*, Fig. 1, Plate I, were produced. The curves which I have described thus far were drawn by myself at the Institute of Technology in this city, nine or ten years ago. The other curves which I have here were drawn in a different manner (to be described presently) by Mr. Charles A. Morey, at that time (February to May, 1874) a student at the Massachusetts Institute of Technology in this city. The apparatus used was a phonautograph, in which Mr. Morey had made several valuable improvements. The instrument consisted of a paraboloidal mirror of metal (as usually constructed by Koenig for this purpose, it being a portion of the instrument commonly known as the Scott-Koeing phonautograph), which passing through the focus, a membrane was stretched. The office of this mirror was simply to so reflect the sound waves that they should be brought to a focus at the point where the centre of the membrane is placed, and so increase the energy of its vibration. A light rod of wood, eight or ten inches in length, was hinged upon the circumference of a brass ring surrounding the membrane and connected with the middle point of the membrane. A plate of

AMERICAN BELL TELEPHONE COMPANY, -14

3181

smoked glass was arranged so that it could be drawn under the extremity of a light style attached to the end of the rod, in the same general manner as already explained in the case of the tuning fork. The curves which are reproduced in Fig. 2, Plate II, were drawn in the following manner. A trombone was sounded in front of the mouth of the phonautograph mirror, already described. The membrane being thus set into vibration and impressing the complicated motion of its middle point upon the rod and attached style, a complex curve was produced on drawing the lamp-blacked glass beneath the style and in a direction at right angles to its vibration.

The curves which are represented in Fig. 3, Plate II, were drawn in the same way, when a short and sudden noise was produced by striking together two pieces of cardboard at the mouth of the mirror. The result of this experiment is particularly interesting, because it shows the exceedingly complicated motion of the membrane and hence of the particles of air acting upon it, even during a small fraction of a second. The different form of the curve, as shown in their various tracings, makes evident to the eye those differences which the ear recognizes as differences in the quality of the sound produced. The figures upon the remaining plates, Plates III and IV, were produced when different vowels were *sung* into the instrument. An inspection of the tracings will show certain differences characteristic of the different sounds produced, though on account of the small amplitude of the vibrations, it is more difficult to obtain a clear tracing.

[*Complainants' counsel puts in evidence the four plates marked "Complainants' Exhibit* 27, *Heliotypes I, II, III and IV, W. P. Preble, Jr., Examiner.*"]

Int. 29. How long have you had the phonautograph at the Institute?

Ans. Over nine years.

Int. 30. These curves, if I understand them, appear to mark successive periodic motions of the air particle we have referred to, represented by the path from the crest of one wave to the crest of the next, and that path itself, or rather the curve which represents the varying motion of the air particle, seems to be compounded in the case of the vocal and instrumental sounds of quite a number of lines,

differing in slope or direction, indicating changes in direction or velocity of the moving particle, quite irregular as compared with the regular curve which exhibits the simple motion due to the tuning fork. Now, please state what relation these motions, and the curves representing them, bear to the utterance of a single syllable, and how many of these periodic vibrations, and how many of these subordinate changes in direction or velocity, occur in or go to make up each syllable in ordinary speech.

Ans. The pitch of the syllable is determined by the number of complete periodic vibrations which occur in a given time, while the different variations in the path between the extremities of the excursion of the vibrating particle determine the quality of the sound. The amplitude of the vibrations determines the loudness. The number of complete periodic vibrations per second, of the sounds ordinarily produced in speaking, vary from one hundred to five hundred per second. Since in ordinary speech we utter five or six syllables in each second, we have during the production of a single syllable from about twenty to one hundred of these complete periodic vibrations. Of the minor changes which determine the quality or nature of the articulate sound, we may have several thousand in a second and hence several hundred in a single syllable.

Int. 31. If you have in any scientific work any curves drawn by the sound waves made in the production of articulate speech, please produce them and explain them, that they may be put into the case as exhibits.

Ans. In an article published in "Silliman's Journal" for July, 1878, by Professor E. W. Blake, Jr., of Brown University, there is a series of illustrations showing the curves produced when a ray of light is reflected from a mirror so attached to the plate of a speaking telephone that the vibrations of this plate shall be communicated to the mirror. The reflected ray of light is caused to act upon a photographically sensitized plate of glass, the mirror at the same time being caused to vibrate by the action of the voice upon the telephone plate. On rapidly moving the plate of glass in a direction at right angles to that in which the reflected ray was caused to vibrate by the vibrations of the mirror, a photographed representation of the complex vibrations of the mirror was produced. In Professor

3183

Blake's figures the vibrations characteristic of different vowels and the rapidly changing vibrations produced in the case of a spoken sentence, are very beautifully shown. According to the statement made by Professor Blake, in the article referred to, the vibrations are magnified in the accompanying cuts one hundred and twelve times.

[*Complainants' counsel puts in evidence, the drawings which form part of the article referred to by the witness, and they are marked "Complainants' Exhibit* 28, *Articulate Curves, W. P. Preble, Jr., Examiner."*]

Int. 32. What is meant by saying that a certain curve is the algebraic sum of certain other curves? Please give an illustration of such an algebraic curve.

Ans. When we speak of one curve as being the algebraic sum of several others, we mean that the former curves can be produced by laying off upon a right line arbitrary distances as abscissas, and giving to the corresponding ordinates a length equal to the algebraic sum of the ordinates corresponding to the same abscissas in the separate elementary curves to be combined. Ordinates lying upon one side of the right line upon which the abscissas are measured are estimated as positive, those lying upon the other side as negative; the same convention as to direction and corresponding algebraic sign being, of course, used in all the curves. An excellent example of such a combination of curves is shown in the annexed figure, taken from a work entitled "Sound," by Alfred Marshall Mayer, Fig. 49, page 153. The curve *c d* in the figure referred to is formed by compounding, in the manner already described, the six elementary curves which are separately represented at *a b* in the same figure. The curve at *c d* is really a graphical representation of the motion of a body so vibrating as to give forth a compound note made up of the six different notes which, taken separately, would be represented by the various curves shown at *a b*.

[*Complainants' counsel puts in evidence a copy of the figure referred to by the witness, marked "Complainants' Exhibit* 29, *Compound Curve, W. P. Preble, Jr., Examiner."*]

Int. 33. State whether the phrase "form of vibration" is well known in the science of acoustics, and what it means.

Said exhibit is as follows:

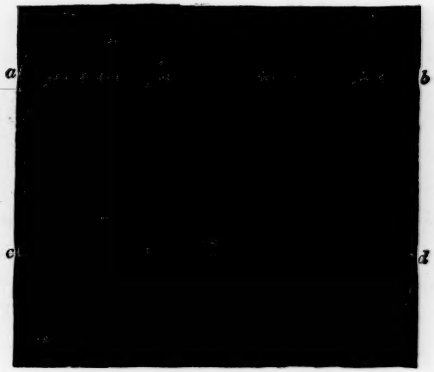

Ans. The term "form of vibration" is one well known in acoustics, and is used to denote the peculiar manner in which a particle vibrates when it is producing a sound of peculiar quality. Variations in the form of a vibration are represented graphically by curves of different forms. It is the peculiar form of any vibration which determines the characteristic quality of any corresponding particular sound.

Int. 34. What must a speaking telephone accomplish with reference to the form of vibration in order to transmit articulate speech, or to transmit those peculiar qualities which distinguish one sound from another sound, when all are what are called of the same pitch and loudness?

Ans. The transmitter must take up from the air particles motions which correspond to those of the air particles themselves, and the receiver must reproduce these motions in all their complexity.

Int. 35. What characteristics must an apparatus possess in order to be able to accomplish this?

Ans. In an electrical speaking telephone, the connection between the transmitter and receiver must be such that the latter shall not be acted upon merely at separate intervals, but the armature or other moving portion of the receiver must be constantly under the influence of and guided by the variations in the electrical current caused by the motions of the armature or other vibrating portion of the transmitter; and this vibrating portion of the transmitter itself must be able to substantially take up the complex motions of the air particles which act upon it. Only in this way can the quality as well as the intensity of vocal or other sounds be reproduced, since not only the

3185

frequency of vibration but also the varying amplitude, and especially the varying form, must be reproduced in order to reproduce the quality called "articulation." The electrical circuit of the instrument must always present an uninterrupted path by which the continually varying current may travel from the transmitter to the receiver, that is, the circuit containing the battery or other source of electrical power, the transmitter, line wire, receiver and earth or return wire must always be closed.

Int. 36. Suppose you work your instruments with an induction coil between the transmitter and the receiver, does that interrupt the connection or path between the transmitter and receiver in the sense in which you have used those terms? If it does not, state why not, and state what conditions must be observed as to the primary and secondary circuit when you so use an induction coil.

Ans. The circuit under these circumstances is not broken in the sense in which I have used that term. For successful transmission of speech in those forms of telephonic apparatus in which an induction coil is used, the primary as well as the secondary circuit must be kept uninterrupted. The operation of the induction coil is such, that although no current is passed from the battery at the transmitter through the receiver, yet every variation of the primary current is reproduced by the secondary current, so that the receiver is as constantly and fully under the influence of the transmitter as if the primary current itself were transmitted.

Int. 37. Suppose you take an apparatus like the iron cone membrane transmitter, complainants' Exhibit 15, remove from the membrane the little wooden cone and screw which are attached to its centre so as to entirely disconnect the armature from it, and then utter into the cone an articulate sound, producing the complex form of air vibration you described, what is the character of the motion which the stretched membrane will be forced to assume?

Ans. If the continuity of the membrane is unbroken it will respond to those complex vibrations which characterize speech, reproducing these with their peculiarities of form either perfectly or with sufficient fidelity to characterize both the words spoken and oftentimes the peculiarities of the individual voice.

Int. 38. Now suppose that to that membrane you attach such an armature as is now on that apparatus, and hinge the other end of it as is shown in that apparatus and then utter the same articulate

sound into the cone, what motion will the combined membrane and armature perform?

Ans. The membrane will still respond to these complex vibrations so that they will be reproduced with substantial fidelity in their various characteristics of number and form. The membrane with the attached pendulum, when the armature is so held that it tends to act as an ordinary pendulum, must be considered as a system which is capable of vibrating in certain various periods. The possible periods of vibration are determined by the elasticity of the membrane, the period in which the armature tends to swing under the influence of gravity, and by the amount and distribution of the mass of the membrane and attached armature.

Either a simple membrane or a weighted membrane, such as is produced by attaching the armature as described, is capable of vibrating in an exceedingly great number of ways. Any thin sheet of wood, metal, or stretched membrane, whether the membrane is unloaded or loaded in the manner and to the extent shown in the telephones of the Exhibit 15, will vibrate in response to those vibrations which are necessary to characterize articulate speech or other musical sounds.

Any stretched membrane will vibrate in response to a large number of notes. The effect of adding the armature may vary the ease with which it responds to certain notes. The injurious tendency of loading the diaphragm will be not to cause it to vibrate continuously at a rate different from that of the sound acting upon it, but to cause a lessened amplitude of vibration, that is, the membrane may be more difficult to set in vibration than when free, but if it does vibrate continuously it will vibrate in the same period with the vibrations of the sound acting upon it.

The effect of the period of the armature (when of the size and weight of that shown in the exhibit) acting as a free pendulum is very slight in comparison with the effect of the elasticity of the membrane, as is shown by the fact that the force necessary to deflect the central point of the membrane through a given distance is enormously greater than that required to deflect the point of attachment of the pendulum, if free, through the same distance. It should also be noticed that if the transmitter be so held that the armature is horizontal when the sound is produced the voice is still transmitted to

3187

the receiver with equal but no greater clearness, as was shown in certain of my experiments described in my tenth answer.

When the membranes are moist it is difficult to reproduce articulate speech, not so much, I think, from the mere diminution of tension of the membrane as from the flabbiness that it assumes under these circumstances.

Int. 39. State what experience you have recently had, and what recognized scientific theories given by writers of authority concur with the statement made in your last answer.

Ans. That the statements made in my last answer are true is shown by the experiments which I have already detailed in my previous answers, in which articulate speech was distinctly transmitted by means of telephones furnished with membranes and vibrating hinged armatures of the size and arranged in the manner described. This result could not have been obtained were not the action of the membranes that which I have described.

In a work entitled "Acoustics," by W. F. Donkin, Part I, Chapter VI, page 90, paragraph 110, the following statements are found: "The periods of the natural vibrations are altered (in general slightly) without ceasing to be constant; but their amplitudes diminish rapidly, so that the system is soon brought sensibly to rest, if there are no obligatory motions or periodic forces." Donkin is here speaking of what he calls natural or free vibrations, "of which the periods are independent of the imposed motions or forces." He then proceeds to speak of what are called forced vibrations, as follows: "If, however, there are, as we have above supposed, small periodic forces or obligatory periodic motions, the system soon assumes a permanent condition of motion (which we will call force, as before) of which the periods are connected with those of the imposed motions or forces according to the law already stated; and there is no trace of the natural vibrations except this: that the *amplitude* and *phases* of the forced vibration depend upon the relative magnitude of their periods and those which the natural vibrations would have if they existed."

In paragraph 111 Donkin proceeds to say: "If any harmonic component of one of the imposed motions or forces have a period nearly equal to that of a harmonic component of any one of the natural vibrations, then there will be a corresponding forced vibration with a large amplitude."

Also, page 89 of the same work, Donkin states: "And it can be shown that *no forced vibration can have any harmonic component of a period, which does not exist amongst the periods of the harmonic components of the imposed motions or forces.*"

Again, on page 105 of the same work, the author says, "Lastly, we see from (8) that though the periods of the forced vibrations at all parts of the system are the same as those of the obligatory vibrations which give rise to them, the phases are in general different."

As the researches of Helmholz show, these differences of phase do not affect the quality of the sound.

In a work entitled the "Theory of Sound" by Lord Rayleigh, Vol. I, pages 38 and 39, the following statements are made: "This is called a *forced* vibration; it is the response of the system to a force imposed upon it from without, and is maintained by the continued operation of that force. The amplitude is proportional to E — the magnitude of the force, and the period is the same as that of the force."

In the next paragraph he says, "The frequency of the vibrations produced is always the same as that of the force."

On pages 41 and 42, paragraph 48, of the same work, the following statement occurs:—

"48. The distinction between *forced* and *free* vibrations is very important, and must be clearly understood. The period of the former is determined solely by the force which is supposed to act on the system from without; while that of the latter depends only on the constitution of the system itself. Another point of difference is, that so long as the external influence continues to operate, a forced vibration is permanent, being represented strictly by a harmonic function; but a free vibration gradually dies away, becoming negligible after a time."

As to the distinction between free and forced vibration, the former as defined by Rayleigh, "Theory of Sound," Vol. I, page 38, is "that executed by the system, when disturbed from equilibrium, and then *left to itself.*"

His definition of a forced vibration has already been given in the earlier portion of this answer.

To illustrate the distinction between free and forced vibrations in a simple case, an ordinary pendulum, if drawn aside and allowed to swing under the influence of gravity, executes free vibrations; while

3189

if the same pendulum were moved to and fro by the force of the hand continually applied to it, the vibrations would be forced.

Int. 40. If in an apparatus like the transmitter, complainants' Exhibit 15, the period of vibration of the compound system of membrane and attached armature were that normal to the length and mass of the armature alone considered as a pendulum, what would be its rate, and what pitch of sound would be produced by that rate of vibration?

Ans. Such a pendulum would perform only six or seven *single* vibrations per second, a number far too low to affect the ear as sound.

Int. 41. I will call your attention to the apparatus, the possibility of which is suggested in the twenty-second answer of Mr. Pope, page 333, of the record, and his eighty-third answer on page 351, and two hundred and tenth answer, page 381. Tell me whether such an apparatus would be a speaking telephone in the sense in which that phrase is ordinarily employed, and in the sense in which Exhibit 15, or defendant's Exhibits Bell Telephone A and B, are speaking telephones.

Ans. Any apparatus in which elementary, simple vibrations, not originally produced by the voice, or other musical instrument, generate separate electrical impulses which are so combined, as by their synthesis to produce complex vibrations and hence to produce a complex tone at the receiver, would not be a speaking telephone, as the term is understood, and in my opinion the term "speaking telephone," as this term has commonly been used, would not properly apply to such an apparatus, even were a perfect imitation of the voice produced by the receiving instrument. It would be a speaking machine but not a speaking telephone. The different variations in tone which the instrument might produce could be only such as the intrument was constructed to create, and cannot be varied except by readjusting the physical conditions of the instrument. The aim of the speaking telephone is not to produce an imitation of the voice, at either the transmitting or receiving end, but to *re*-produce at the receiver sounds uttered by the operator at the transmitting end. In the case of the speaking telephone, the complexity of the vibrations exists in the air, and the synthesis of vibrations, which makes that complexity, is produced by the voice of the speaker outside of and independent of the instrument. The sole function of the instrument is to transmit the vibrations which are brought to it, whether they be simple or

complex. In the case of the instruments described in the answers to the interrogatories mentioned, separate contrivances would produce in different parts of the transmitting instrument, each its own separate and simple electric charges; the synthesis of these separate variations into one complex variation would take place in the instrument itself, with more or less perfection, according to the fitness of the apparatus for that purpose.

The function of such a transmitter is not to transmit vibrations of sounds brought to it from an independent source, but to produce sounds at the receiving end without reference to the pre-existence of a similar sound elsewhere.

In a speaking telephone the sound uttered by the voice at the transmitting station is the operating power of the apparatus. In the other instrument no sound is needed or is necessarily heard at the transmitting station. If any sound is produced in the operation of the transmitting instrument, as in the case of a reed transmitter, it is, so to speak, a mere waste product and has no effect upon the operation of the apparatus.

Int. 42. Suppose the hypothetical apparatus suggested by Mr. Pope, and referred to in your last answer, were provided with an organ pipe circuit breaker, such as is referred to in Mr. Pope's twenty-fourth answer, pp. 335, 336, and one hundred and thirtieth answer, p. 362, would it any the more be a speaking telephone, and if not, why not?

Ans. It will not, for the reason that with the organ pipe transmitter the sound, as sound, is of no value in the operation of the apparatus. Precisely the same effect would be produced at the receiving station as if the vibrations of the circuit breaker were produced in any other manner. Such a transmitter is capable of transmitting only particular sounds produced by itself as a part of the apparatus, while the speaking telephone must transmit sounds produced externally to itself and with whose production it has no connection.

Int. 43. Would Mr. Bell's harp apparatus, described in his London lecture, put in evidence by the defendant on p. 220 of the printed record, and referred to in Mr. Pope's one hundred and ninety-fourth answer, p. 376, and two hundred and ninth answer,

p. 381, be a speaking telephone in the sense which you have attributed to that term, and if so, why?

Ans. It would for the following reasons: First, the complex vibrations which are reproduced by the receiver originally existed in the air when acting upon the transmitter; and, secondly, because the moving portions of the receiver are constantly under the influence of and guided by these variations in the electric currents which are produced by the movable portions of the transmitter. Such an instrument will in theory reproduce at the receiving end any sound, of whatever nature and howsoever produced, which is made at the transmitting end; also in such an instrument the electrical impulses produced by all the vibrating portions of the transmitter are due to the action of these movable portions in varying the magnetic condition of the core of a single electro-magnet.

Int. 44. Calling your attention to the apparatus referred to in the fortieth question and the statement in your answer thereto, I wish to ask you whether if the sound first uttered into the transmitter by the person speaking did not correspond in pitch to the normal rate of vibration of that pendulum armature, it would approach it any more nearly if the speaker raised the pitch of his voice.

Ans. As I have already stated, the lowest note ordinarily uttered by the human voice corresponds to about one hundred double or two hundred single vibrations per second, whereas a pendulum of the length described would perform only six or seven vibrations per second. From this it will be seen that in the lowest ordinary note of the human voice the number of vibrations is more than thirty times as great as the number executed in the same time by such a pendulum, and any elevation of the pitch of the voice would of course carry its rate of vibration farther and farther from unison with that of the pendulum.

Int. 45. Do the curves which you have put in in your twenty-eighth and thirty-first answers show by their form all the complexities of aerial vibrations which sensibly affect the ear as sound?

Ans. They do not. The membrane, even under the most favorable circumstances, will not reproduce all of the complexities of the vibrations in the case of speech, nor is the style capable of register-

ing the most minute changes among those to which the membrane will respond. The ear is far more sensitive than such a membrane. All of the variations, however, which are traced upon the plate by the style correspond to variations in the vibrations actually present in the air. The membrane, however, will reproduce a sufficient number of these variations to characterize the particular articulation of speech in the experiment.

Int. 46. You have spoken of the irregular form of the curves or lines which represent the complex vibrations that accompany articulate speech or sounds of other qualitities. What do you mean by "irregular" in that sense, and what do you compare such a sound vibration curve with in order to determine whether it is regular or irregular?

Ans. By a regular vibration, as I have used the term in previous replies, I mean a simple vibration, that is, a vibration whose graphical representation is a sinusoid. Such a vibration as is produced by a tuning fork sounding its fundamental, and represented as drawn by such a fork in *a*, Fig. 1, Plate I, Exhibit 27, referred to in my twenty-eighth answer. By an irregular vibration I mean any whose graphical representation deviates from a sinusoid even when the curves representing such a vibration appear to the eye to have a distinct regularity (using the term in its common sense) and periodicity. For example: in the figure of Exhibit 29, referred to in my thirty-second answer, any particular one of the six separate curves figured at *a*, *b*, represents a regular vibration, whereas the curve at *c*, *d*, represents an irregular vibration. In the sense in which I have used the terms, an irregular vibration may have a definite periodicity.

Int. 47. The second curve, *c*, *d*, in the figure you have just referred to, appears to be composed of two branches or legs, of which one is very regular to the eye, and is nearly a straight line, while the other appears like a series of steps, each of which differs from the one next to it. Is the vibration in one direction, represented by one leg of that curve, any less complex, considered as a sound vibration, than that represented by the other leg?

Ans. The vibration is equally complex in both portions of the

3193

curve, as is readily shown by a mathematical analysis of the motions of the vibrating particle

Int. 48. Then, if I understand you aright, you would compare the curve, *c*, *d*, with the sinusoidal curve, for example, shown by the most prominent line at *a*, *b*, and every time that the curve, *c*, *d*, changing its direction or rate of curvature, exhibits for an instant a form which is not what a sinusoidal curve would present at the same point of its path, you would say that the curve would represent a complexity or variation in th sound vibration. Is that right? And if not, state what the fact is on that subject.

Ans. I should, and even in certain cases when the direction and rate of curvature of the line do not change, which would occur, for example, when the line is straight, the vibration would still be complex. The vibration is simple only when a sinusoidal curve is followed in its whole curvature.

Cross Examination by CAUSTEN BROWNE, Esq., *of Counsel for Defendant.*

Cross-Int. 49. Were the membrane telephones, which you testified about yesterday afternoon, made under your direction?

Ans. They were not.

Cross-Int. 50. Do you know under whose direction they were made?

Ans. I do not.

Cross-Int. 51. Or by whom they were made?

Ans. I do not.

Cross-Int. 52. Or when they were made?

Ans. I have reason to believe that the telephones with adjustable membranes were made while my experiments were in progress, but I cannot testify positively that that was the fact.

Cross-Int. 53. The membrane diaphragm in the instrument marked "Defendant's Exhibit Bell Apparatus of 1876 patent, Transmitter," appears to be in a slack or flabby condition. With that exception and assuming the membrane to be as taut as it ought to be, do you see anything in the instrument which should prevent its successful operation as a transmitting instrument when properly placed

in circuit with the receiving instrument which belongs with it, so as to have speech well transmitted thereby?

Ans. I do not see anything in its construction to prevent its successful use as a transmitter.

Cross-Int. 54. I suppose you mean to answer my question broadly in the negative, do you?

Ans. I do. The only reason why I did not answer in a less qualified manner was that the receiving instrument was not shown me in connection with the transmitter. Having now examined the receiving instrument I will answer your question in the negative, assuming also that the receiving membrane is made properly taut.

Cross-Int. 55. Did you make any trials of any of the membrane telephones mentioned yesterday, under any different conditions as to construction or size or arrangement of parts from what they are now in?

Ans. The only variations which were made in the telephones were such as to produce greater or less tension in the membrane and a varying distance of the armature from the pole of the magnet, together with the experiments mentioned in my testimony in which the armature was placed in a horizontal or inclined position.

Cross-Int. 56. Did the variations in the distance of the armature from the pole of the magnet consist in your setting the magnet and armature farther apart when the diaphragm moving the armature was in a slack state?

Ans. They did, but I frequently made changes in this distance in order to adjust the apparatus for most distinct articulation even when the membrane was tightly stretched.

Cross-Int. 57. You did not try either of these telephones with any other armature than that which was in it when you were called upon to make your experiments with it, and which is in it now, did you?

Ans. I did not, for the reason that I got good results with all of the instruments which I tried, which presented so great a variety in the size of the armature that further experiments did not seem necessary to me.

Cross-Int. 58. Are the experiments which you have testified to

AMERICAN BELL TELEPHONE COMPANY, -14

3195

the only experiments which you have tried with telephones having membrane diaphragms?

Ans. I have not gone into the more minute details of my experiments, but I have described substantially all the different pieces of apparatus which I have used.

Cross-Int. 59. I quote from your answer to the thirty-eighth interrogatory the following: "The membrane with the attached pendulum, when the armature is so held that it tends to act as an ordinary pendulum, must be considered as a system which is capable of vibrating in certain various periods. The possible periods of vibration are determined by the elasticity of the membrane. The period in which the armature tends to swing under the influence of gravity, and by the amount and distribution of the mass of the membrane and attached armature." Is there any degree of elasticity of the membrane or periodicity of the swing of the armature under the influence of gravity, or of amount and distribution of the mass of the membrane and attached armature, which, in your judgment, will cause the apparatus to be practically inefficient as a speaking telephone? I mean to speak of any change in degree of either of these characteristics, or of all of them.

Ans. My experiments show that when the membrane is greatly relaxed, it becomes difficult or impossible to transmit speech distinctly. The same result occurs when the membrane becomes very moist. I do not doubt that too great an increase in the weighting of the membrane, which would ensue were the armature of excessive mass, would interfere seriously, and even prevent the transmission of articulate speech.

Cross-Int. 60. Do you know of any rule or ratio by which to determine aright the weight of the armature for a taut diaphragm of given diameter, or is it to be got at by experiment?

Ans. Such a result could best be ascertained for all practical purposes by direct experiment, as the theory of weighted cords or membranes is difficult, and in many points, obscure.

Cross-Int. 61. You say it would best be ascertained by experiment. Do you know of any other way of ascertaining it?

Ans. No way which would have any practical value.

Cross-Int. 62. Should you say that the distribution of a given

weight of armature in the respect of length or of width or of thickness would make any difference for a taut membrane diaphragm of given diameter as to the practical results obtained either in kind or in degree of result?

Ans. Within reasonable limits of size, my experiments would lead me to suppose that but slight difference would practically result from such variations, so far as the possibility of transmitting articulation by a telephone thus constructed is concerned.

Cross-Int. 63. State a little more particularly what you mean by "reasonable limits." Take, for example, the instrument marked "Defendant's Exhibit Bell Apparatus of 1876 patent, Transmitter." Within what limits do you understand that the length, width and thickness of its armature may be varied, the weight of metal remaining the same, without practically affecting its efficiency, for the purposes of a speaking telephone, assuming, of course, that the membrane is in a properly taut state?

Ans. I must here speak without direct experiments to guide me in my answer. In my opinion any one of the dimensions of the armature might be either doubled or halved, and very likely varied in a still greater ratio, without practically affecting its efficiency.

[*Adjourned to June* 19.]

BOSTON, June 19, 1879.

Cross-Int. 64. How is the fundamental of a given circular stretched membrane to be ascertained?

Ans. By direct experiment most readily, though of course if we know all of the quantities entering into consideration the result can be calculated.

Cross-Int. 65. By experimentally do you mean tapping it and listening to the sound?

Ans. That is the simplest method. Of course it should be tapped gently and with some soft substance to prevent the undue prominence of overtones.

Cross-Int. 66. Upon what does the fundamental of a circular stretched membrane depend?

Ans. Upon its diameter, thickness, tension, mass, material, the mode of attachment of the membrane and the number of points, if any, at which its vibration is damped.

3197

Cross-Int. 67. Do you understand the attachment of the armature to the centre of the diaphragm mentioned in the Bell patent of 1876, to involve what you speak of here as a damping of the diaphragm?

Ans. Not exactly in the sense in which the term "damping" is generally understood. By damping I mean the formation or tendency to the formation of a node (meaning a point of no vibration) produced by touching the vibrating body by some substance.

Cross-Int. 68. I find this stated in Lord Rayleigh's first volume, page 290, "A circular membrane cannot vibrate in unison with every sound. It can only place itself in unison with sounds more acute than that heard when the membrane is gently tapped." Do you suppose this statement to be correct?

Ans. Lord Rayleigh's statement is correct in the sense in which he makes it. The membrane to which he refers is probably the theoretical membrane without thickness or weight. In the case, however, of a membrane such as would be actually employed in acoustic experiments, continuous vibration could not in general be produced by a simple note of a pitch greatly below that of the membrane, except perhaps in certain special cases, which, as I understand the matter, Lord Rayleigh does not pretend to discuss in the paragraph referred to.

Cross-Int. 69. Does he discuss these special cases anywhere else in his work?

Ans. I have not read his work completely and with sufficient thoroughness to say whether he does or does not discuss them. The principles underlying them, however, I think must be dealt with in some portion of his work.

Cross-Int. 70. Why do you think that the membrane to which he refers is probably the theoretical membrane, without thickness or weight, and not a membrane such as would actually be employed in acoustic experiments?

Ans. In answering the question referred to, I did not perceive its exact import, else I should not have made this seeming limitation, which I endeavored to remove in the latter part of my answer. I suppose that in the paragraph referred to, which I have not examined in connection with my present answers, he was discussing the vibrations of membranes in a mathematical manner. In such cases it is

common to consider the membrane as devoid of thickness, and in certain cases its mass is not considered, though in the general problem of vibration these elements necessarily enter into play. The mathematical theory of the vibrations of membranes is more obscure than that of most other vibrating bodies, and except in the more simple cases it is not safe to rely upon theory alone in the absence of experiment. The subject of the vibrations of membranes as experimentally studied is, however, very well understood.

Cross-Int. 71. Was the relation which the fundamental of a circular stretched membrane bore to the sounds or tones whose vibrations it would take up, or with which it would vibrate in unison, well understood at the date of the Bell patent of March, 1876?

Ans. All of our most important experiments upon the vibrations of such membranes in general were performed, if I am not mistaken, a number of years previous to the date mentioned, and had become public at the date mentioned in the question.

Cross-Int. 72. You say in your sixty-eighth cross-answer, "In the case of a membrane, such as would be actually employed in acoustic experiments, continuous vibration could not in general be produced by a simple note of a pitch greatly below that of the membrane except," etc. What do you mean by "greatly below"?

Ans. It is impossible to define the musical interval beyond which any effect would be produced, without a precise knowledge of the particular circumstances of the membrane experimented upon. The point which I had in mind in my answer was one concerning the forced vibration of a membrane. A membrane might be forced to vibrate in unison with a note slightly below its fundamental, in accordance with a well-known principle in acoustics. The limits of this forcing action are far greater in the case of a membrane than in many other cases, as for example, that of a tuning fork. If the membrane vibrates continuously, however, in a forced manner, under the circumstances supposed its vibration will be in unison with that of the vibrations acting upon it, as I have indicated in my answer to certain of the questions of my direct examination.

Cross-Int. 73. In what publications of date prior to March, 1876, can the experiments, which you referred to a little while ago as the

3199

most important experiments upon the vibrations of membranes, be found described?

Ans. The very extended researches of Savart are found in the various volumes of the *Annales de Chimie et de Physique;* a summary of these, embodying his general results, will be found in any standard work on general physics, as, for example, the *Cours de Physique* of Jamin. I think that the results of some later experimenters are published in certain of the German periodicals, but cannot say exactly where, without particularly looking up the matter.

Cross-Int. 74. What is the reason of the diminishing capacity of the stretched membrane in the Bell patent to do its work properly in the transmission of speech, as the membrane ceases to be properly tense, and begins to be what we call flabby?

Ans. Considering simply a diminution of tension, such as ensues when the membrane is less tightly stretched, I suppose that its diminished capacity arises from the fact that its elastic force, in that state, is not sufficient to enable it to vibrate sympathetically with many of the sounds characterizing speech. If the membrane becomes moist, the condition thus induced, which in a previous reply I have designated by the term "flabbiness," also prevents the satisfactory vibration on account of the loss of elasticity thus produced.

Cross-Int. 75. When a tuned reed is vibrated, do the aerial vibrations produced thereby have "form" in the sense in which you used the expression, and in which it was used by persons conversant with this subject in 1876?

Ans. They do.

Cross-Int. 76. If such a tuned reed be vibrated within the magnetic field of the electro-magnet in lieu of the hinged armature attached to the membrane, as illustrated in Fig. 7 of Bell's patent of 1876, will there be thrown upon the line wire electrical indulations corresponding in form to the aerial vibrations so produced by the vibration of the tuned reed?

Ans. Under the circumstances mentioned, variations will be produced in the electrical condition of the wire which correspond to the peculiar motion of the tuned reed, and hence correspond with the vibrations which such a reed produces in the surrounding air. In the case, however, of a tuned reed the only variations in the electrical

condition of the wire which can be produced by it are those determined by the physical construction of the vibrating reed itself, while in the case of the vibrating armature, in the illustration referred to, any vibration may be caused to take place through the action of vibrations produced externally to it and independently of it, so that such an armature, unlike the reed, will produce in the wire electrical variations of any degree of complexity whatsoever, which will correspond to the varying complexity of any vibrations whatever which are communicated to the said armature by means of the membrane to which it is attached, or otherwise. As I have indicated in a previous answer, the vibrating reed referred to will produce these same electrical variations, however its motion may be produced and whether it did or did not, in consequence of these vibrations, produce a sound.

Cross-Int. 77. I will ask you to listen to my question again, and observing that it does not call for any comparison between what takes place when the tuned reed is vibrated, and what takes place when the membrane carrying the hinged armature is vibrated, answer it, yes or no, if you can.

Ans. If any aerial vibrations are produced by the tuned reed, which is not necessarily the case, the correspondence referred to in the question will certainly exist.

Cross-Int. 78. Why is it not necessarily the case that the vibration of the tuned reed will produce aerial vibrations?

Ans. The circumstances might not be such as to allow of their production, as for example, if the vibrating reed were in a vacuum, or surrounded by a liquid.

Cross-Int. 79. I suppose that if you talked against the membrane of a Bell telephone *in vacuo*, you would not get sound through, would you?

Ans. If it were possible to talk *in vacuo*, no sound would get through, for the reason, however, that the membrane and attached armature would not be set in vibration, and in the case of a speaking telephone, producing characteristic sounds at its receiving end, the transmitter must be operated by a similar sound at the transmitting end.

Cross-Int. 80. I have understood you to say that you thought

3199

most important experiments upon the vibrations of membranes, be found described?

Ans. The very extended researches of Savart are found in the various volumes of the *Annales de Chimie et de Physique;* a summary of these, embodying his general results, will be found in any standard work on general physics, as, for example, the *Cours de Physique* of Jamin. I think that the results of some later experimenters are published in certain of the German periodicals, but cannot say exactly where, without particularly looking up the matter.

Cross-Int. 74. What is the reason of the diminishing capacity of the stretched membrane in the Bell patent to do its work properly in the transmission of speech, as the membrane ceases to be properly tense, and begins to be what we call flabby?

Ans. Considering simply a diminution of tension, such as ensues when the membrane is less tightly stretched, I suppose that its diminished capacity arises from the fact that its elastic force, in that state, is not sufficient to enable it to vibrate sympathetically with many of the sounds characterizing speech. If the membrane becomes moist, the condition thus induced, which in a previous reply I have designated by the term "flabbiness," also prevents the satisfactory vibration on account of the loss of elasticity thus produced.

Cross-Int. 75. When a tuned reed is vibrated, do the aerial vibrations produced thereby have "form" in the sense in which you used the expression, and in which it was used by persons conversant with this subject in 1876?

Ans. They do.

Cross-Int. 76. If such a tuned reed be vibrated within the magnetic field of the electro-magnet in lieu of the hinged armature attached to the membrane, as illustrated in Fig. 7 of Bell's patent of 1876, will there be thrown upon the line wire electrical indulations corresponding in form to the aerial vibrations so produced by the vibration of the tuned reed?

Ans. Under the circumstances mentioned, variations will be produced in the electrical condition of the wire which correspond to the peculiar motion of the tuned reed, and hence correspond with the vibrations which such a reed produces in the surrounding air. In the case, however, of a tuned reed the only variations in the electrical

condition of the wire which can be produced by it are those determined by the physical construction of the vibrating reed itself, while in the case of the vibrating armature, in the illustration referred to, any vibration may be caused to take place through the action of vibrations produced externally to it and independently of it, so that such an armature, unlike the reed, will produce in the wire electrical variations of any degree of complexity whatsoever, which will correspond to the varying complexity of any vibrations whatever which are communicated to the said armature by means of the membrane to which it is attached, or otherwise. As I have indicated in a previous answer, the vibrating reed referred to will produce these same electrical variations, however its motion may be produced and whether it did or did not, in consequence of these vibrations, produce a sound.

Cross-Int. 77. I will ask you to listen to my question again, and observing that it does not call for any comparison between what takes place when the tuned reed is vibrated, and what takes place when the membrane carrying the hinged armature is vibrated, answer it, yes or no, if you can.

Ans. If any aerial vibrations are produced by the tuned reed, which is not necessarily the case, the correspondence referred to in the question will certainly exist.

Cross-Int. 78. Why is it not necessarily the case that the vibration of the tuned reed will produce aerial vibrations?

Ans. The circumstances might not be such as to allow of their production, as for example, if the vibrating reed were in a vacuum, or surrounded by a liquid.

Cross-Int. 79. I suppose that if you talked against the membrane of a Bell telephone *in vacuo*, you would not get sound through, would you?

Ans. If it were possible to talk *in vacuo*, no sound would get through, for the reason, however, that the membrane and attached armature would not be set in vibration, and in the case of a speaking telephone, producing characteristic sounds at its receiving end, the transmitter must be operated by a similar sound at the transmitting end.

Cross-Int. 80. I have understood you to say that you thought

3201

the harp arrangement of tuned reeds in circuit at the transmitting and receiving ends of the lines, referred to by Professor Bell in a lecture of his, as mentioned in the direct examination, was properly to be regarded as a speaking telephone. If a deaf man, alone with this instrument, talks against the series of transmitting reeds, there is no sound produced at the transmitting station, is there?

Ans. The term "sound," like the term "light," is used in two senses, and it is quite customary, when necessary to draw the distinction in a scientific discussion of matters of this kind, to speak of objective and subjective light, and of objective and subjective sound. If we consider only subjective sound in the case of the unfortunate, in the experiment referred to, we may say that no sound is produced, but those vibrations of the air are produced which, except for his defective sense, would produce that sensation, and which would also produce that sensation, were a second person not afflicted in the same way present.

Cross-Int. 81. When you said in your direct examination, "In a speaking telephone, the sound uttered by the voice at the transmitting station is the operating power of the apparatus," you meant, I suppose, that the air waves produced by the speaker, and conveyed through the air to the instrument, constituted the operating power of the apparatus?

Ans. I did.

Cross-Int. 82. These air waves so produced and propagated, in the case of the harp apparatus just above mentioned, strike upon all the transmitting tuned reeds and excite vibrations in such of them as are constructed to vibrate in unison with the air waves. Is that so?

Ans. It is.

Cross-Int. 83. Should you say that in such case the vibrations of the tuned reeds were excited by wind?

Ans. I should not.

Cross-Int. 84. How would you distinguish between such excitation of vibration of the tuned reeds and what you would call excitation of the like vibrations by wind?

Ans. The term "excitation of vibrations by wind" is an exceedingly indefinite one unless it be accompanied by some description of the particular apparatus to be used in such a case. If such vibra-

3302

tions were excited, for example, by a circuit breaker or other apparatus for the same general purpose, attached to a series of organ pipes, I should say that although the results at the receiving station of transmitted sound might be similar in the two cases, the difference would be this: The harp telephone, if practically realized, would transmit all vibrations produced independently of it, and in any manner whatever in its vicinity. The vibrations produced by wind in such an apparatus as I have mentioned are definite in number and determined not by the nature of the wind itself or by any circumstances exterior to the apparatus.

Cross-Int. 85. No matter whether the vibrations produced are definite in number or not, or are determined by the nature of the wind itself or by circumstances exterior to the apparatus, are they in fact produced by wind?

Ans. The vibrations in the case of Mr. Bell's harp apparatus used as a speaking telephone are not produced by means of the wind.

Cross-Int. 86. Are they produced by means of wind? was my question.

Ans. I don't understand what is meant by the question, and do not know how to answer it except by entering into the analysis of the various senses in which the term "wind" can be used, and discussing the whole series of complex operations involved in the production of speech by the passage of air from the lungs over the vocal cords, its propagation to the transmitting harp, and its action upon that instrument.

Cross-Int. 87. You need not take all that trouble on my account, all I want you to do is to explain *yourself.* I quote from your eighty-fourth answer: "The harp telephone, if practically realized, would transmit all vibrations produced independently of it, and in any manner whatever in its vicinity. *The vibrations produced by wind* in such an apparatus as I have mentioned are definite in number and determined not by the nature of the wind itself or by any circumstance exterior to the apparatus." What apparatus do you here refer to as that in which vibrations are produced by wind?

Ans. In the instrument referred to in my eighty-fourth answer I

3203

spoke of the production of vibrations by wind in the sense in which we speak of the vibrations of a reed organ pipe as being produced by wind.

Cross-Int. 88. You understand, I suppose, how a tuned reed can be set in vibration by wind, do you?

Ans. I do when mounted in a manner adapted for that purpose.

Cross-Int. 89. Please explain the difference between the manner in which the reed is set in vibration by wind as you understand the term, and the manner in which it is set in vibration by the utterance of a sound to whose air waves, or some of them, it is fitted to respond. I want you to explain the difference in the two ways (if there is a difference) in which the movement of particles of air set the reed in vibration in the two cases.

Ans. I think the clearest way of explaining this difference is to consider simple examples of such vibrations. Let us consider, first, the action in the case of the harp apparatus. Here a series of rapidly recurring impulses of the air particles, coinciding in period with the period in which one of the attached springs can vibrate, are continually acting to keep up the vibration of the reed. The case, in fact, is one of what is called sympathetic vibration. The reed under the influence of impulses will not be set into continuous vibration unless its natural period of vibration coincides with the periods of these impulses. In the case of a vibration, such as that of the reed in a reed organ pipe, we have a different action. In what, for example, is known as the beating reed, the tongue of the reed, when at rest, is removed a short distance from the open side of the reed so as to allow the air to pass through this opening. When a current of wind is blown through this small tube in the ordinary manner, the force of the wind carries the tongue of the reed towards the small end of the tube, until it finally closes the opening of the tube entirely. This causes a temporary cessation of the current, so that under the influence of its elasticity the tongue returns towards its original position. An exit for the wind being now opened again, the tongue of the reed again moves toward the aperture, and these changes recurring constantly, a continuous vibration is kept up. In this case it will be seen the elasticity, dimensions and mass of the reed determine its rate of vibration, subject, however, to certain variations,

from the effect which these alone would produce, dependent upon the natural period of vibration of the air contained in the bell, as it is called, of the organ pipe.

Cross-Int. 90. Do you understand that it is practicable to set the reeds, or any of them, of Professor Bell's harp telephone into vibration by wind?

Ans. Not with the apparatus constructed as represented in his figure and as arranged for use in the manner suggested by him.

Cross-Int. 91. As the apparatus is constructed, why cannot they be set in vibration by wind?

Ans. The operation of a blast of wind upon them when arranged as represented would be simply to deflect each one of them from its normal position through a certain distance, dependent upon the construction of the reed itself and the force of the wind.

Cross-Int. 92. In Fig. 5 of the drawing of his patent of 1876, Professor Bell shows a steel spring armature firmly clamped by one extremity to the uncovered leg of a magnet, and its free end allowed to project above the pole of the covered leg, and he says that this armature "can be set in vibration in a variety of ways, one of which is by wind." Is it true, do you think, that it can be so set in vibration?

Ans. By the addition of accessory apparatus, as by connecting this reed with an organ pipe so as to cause it to form the tongue of the reed of the pipe, or by various other auxiliary arrangements this can readily be done.

Cross-Int. 93. How is it that the wind sweeping across the strings of an æolian harp, sets them into vibration?

Ans. The strings in the case of an æolian harp are very readily moved, and are capable of responding each one to a very large number of vibrations. For the best effects with such an instrument, it must be placed where the air will come against it somewhat irregularly, or better still, where the wind itself strikes against some obstacle so as to produce actual vibrations in the air, in which case these vibrations are taken up by the strings themselves. In this case it is not the wind, as wind, which produces the vibrations of the strings of the harp, but these are actuated by vibrations produced in the moving air constituting the wind, but which might

3205

equally well be produced in still air, and which, if so produced, would act upon the strings of the æolian harp in the same manner. In the case of an æolian harp, the impact of the moving air itself against the cords generally does produce small vibrations to which the cord can respond. The case is analogous to that of the production of sound by a common whistle.

Cross-Int. 94. If the operation of a blast of wind upon the tuned reeds of Professor Bell's harp telephone would be simply to deflect each one of them from its normal position through a certain distance, dependent upon the construction of the reed itself and the force of wind, producing, if I understand you, no vibration giving musical sound, why does a blast of wind sweeping across the strings of an æolian harp generally produce small vibrations of the strings of the harp?

Ans. In my answer to the question regarding the effect of a blast of air upon the harp apparatus, I intended to discuss merely the action which would practically be produced under such circumstances. I do not assert but that it would be possible to produce a harp apparatus upon which a blast of air might produce irregular and constantly varying notes, but it would be difficult to do this for several reasons. One of these reasons is because the string will respond to a great number of the vibrations which are, so to speak, accidentally produced when the air strikes against it or upon any obstacle in its neighborhood, while a single reed of the harp would respond to a comparatively small number. Again, the force required to deflect the reed in such a way as to cause considerable deviation is great, as compared with that required to deflect the string. Again, whereas a string, especially if in connection with a sounding box, can be forced to a certain extent, it is very difficult to do this to any noticeable extent with the tuned reed mounted in the manner described.

Also, any modification which would increase the facility with which the harp apparatus would take up these irregular and constantly varying rates of vibration would, in so far as that result was realized, tend to destroy its value as a speaking telephone. I should also say, in this connection, that if the tuned reeds were so modified as to be more readily acted upon by a blast of air as already discussed, a greater number of notes, though still a small number as

3206

compared with the string, could be produced by a single reed. Also, just as with an æolian harp it is impossible to produce a sustained tone of definite pitch, it would also be impossible with a reed apparatus, intended to be operated in a manner similar to the operation of the æolian harp, to produce such a continued tone of definite pitch. And as a matter of fact it is very well known that if a blast of air be blown, for example, against the tuned teeth of a music box no continuous definite sound could be produced, although there might be, especially if the blast was intermittent, occasional responses heard.

Cross-Int. 95. Do you mean to be understood in your last answer as saying that the same reed tuned to vibrate at a particular rate may be made to change its rate of vibration by variations in the force of a current of air, under the influence of which it is vibrating?

Ans. Any metallic rod, like almost any other body, is capable of vibrating in several different ways. If a blast of air were blown against such a rod it would produce vibrations in the air itself. Under the influence of vibrations thus produced, the reed might be set into vibration, but the period of this vibration would be one of the periods in which the body could naturally vibrate, and which one of these periods was selected would be determined not directly by the strength of the blast of air, but by the particular overtones present in the rustle caused by the air as it passes across the reed. Hence the sound produced by such a reed or collection of reeds when thus acted upon by a blast of air would depend simply upon the physical construction of the reeds themselves.

Cross-Int. 96. You spoke in your ninety-fourth answer of such modification of the tuned reeds of the Bell harp telephone as should make them more readily acted upon by the blast of air. Will you state in what such modification of construction would consist?

Ans. I do not know of any experiment previously tried which would enable me to answer this question in a definite manner. I should think that a somewhat large reed and one rather thin would be more likely to be set into occasional vibration by a blast of air after the manner of the æolian harp.

Cross-Int. 97. In your forty-first answer, speaking of the appa-

3207

ratus described hypothetically by Mr. Pope, or of a class of instruments embracing that which you say might be speaking machines (if they gave a perfect imitation of the human voice), but would not be speaking telephones, you say, "The different variations in tone which the instrument might produce could be only such as the instrument was constructed to create, and cannot be varied, except by readjusting the physical conditions of the instrument." Are the tones which the Bell harp telephone can produce capable of being varied except by readjusting the physical conditions of the instrument?

Ans. The harp instrument, in any form in which it could be practically constructed, would necessarily be very imperfect as a transmitter of different tones when compared with the speaking telephone as actually realized by him; yet it would perform the same office in proportion as his ideal instrument was realized in practice. If before such an instrument, sounds of different quality, pitch and loudness were produced, all of the variations of each one of these sounds would be reproduced at the receiving station. Again, variations in the intensity of a given sound or variations in the form of such a sound would be faithfully reproduced without altering the instrument in any way whatever, or even touching any portion of it. In the hypothetical apparatus of Mr. Pope, it would not be possible to reproduce even the variations in loudness which might be given to a single note, still less, those variations in quality which would be produced by varying loudness or varying number of notes present.

Cross-Int. 98. You have described in your last answer the different variations in tone which the Bell harp instrument may produce, and contrasted them with the capacity of the hypothetical Pope instrument in this respect, to the manifest disparagement of the latter. If you will attend to my question, you will see that I asked you no such thing, and I will thank you now to answer it, and nothing else. I will repeat it: Are the tones which the Bell harp telephone can produce capable of being varied except by readjusting the physical conditions of the instrument?

Ans. With regard to the statement which precedes the last question, I would say that it was impossible for me to give any answer directly affirmative or negative which shouldmake clear the sense in

which that answer was intended to be understood. In the comparison which I instituted between the instruments of Mr. Bell and Mr. Pope my aim was not to disparage either of them, but to show as far as I possibly could, in a few words, that the two instruments were totally different in principle, different in mode of operation, and intended for totally different purposes. To take a single and very simple illustration, which I have already used in my preceding answer: If we had a simple note whose intensity was gradually varied, such a variation could be perfectly reproduced by the harp instrument, while it could not be reproduced practically by the instrument of Mr. Pope. Of course if in the harp apparatus we had a very limited number of reeds, we should be able to reproduce only a limited number of tones. In the apparatus of Mr. Pope, however large a number of reeds we might have, those variations in the number sounding, which would be necessary to produce various tones, could only be brought about by a change in the state of the instrument produced by mechanical means, while in the harp apparatus variations in the tones transmitted and *reproduced* would follow from the mere action of the air vibrations upon the instrument itself, without any mechanical readjustment or alteration of the position of any of its parts.

Cross-Int. 99. I quote your language in the forty-first answer: "The different variations in tone which the instrument might produce could be only such as the instrument was constructed to create, and cannot be varied except by readjusting the physical conditions of the instrument." Is not this statement true of the Bell harp telephone?

Ans. In a certain sense it is true, but not in the sense in which it is true of Mr. Pope's instrument, and in the sense in which I intended my words as quoted to be understood, nor in the sense in which I think they will be understood when taken in connection with the remainder of my original statement, especially as illustrated in my answer to the two questions immediately preceding this one.

Cross-Int. 100. "In a certain sense it is true." What do you mean by that? In what sense is it true?

Ans. In the sense that while the harp instrument, if constructed with a definite number of reeds, will perfectly take up from the air and transmit those vibrations of the air particles whose periods are

3209

identical with those in which the reeds are naturally capable of vibrating, yet such an instrument (while it might reproduce with great perfection very many variations in tone and would reproduce practically all variations in loudness of those notes which it was capable of reproducing at all) would not, on the other hand, be capable of reproducing sounds or variations to which the presence of notes, not represented by corresponding reeds, is essential. To transmit such sounds, the physical adjustment of the instrument would have to be modified.

Cross-Int. 101. In your answer to the ninety-second cross-interrogatory, you said that the steel spring armature shown in Fig. 5 of the drawing of Bell's patent of 1876 could be set in vibration by the action of accessory apparatus, as by connecting this reed with an organ pipe so as to cause it to form the tongue of the reed of the pipe, or by various other auxiliary arrangements. Do you have in mind apparatus for the purpose of vibrating reeds such as are common or well known among organ makers?

Ans. Some of the methods which I had in mind are well known. Some of the others perhaps less so.

Direct Examination resumed.

Int. 102. What do you mean by the fundamental of a given circular stretched membrane, as that phrase is used in the sixty-fourth cross-interrogatory and answer?

Ans. The lowest note which it will produce when vibrating freely, that is, in what is called its natural vibration.

Int. 103. Are there any instruments well known in acoustics or described in books on that subject which depend for their operation upon the capacity of a stretched membrane to take up with substantial fidelity the air vibrations ordinarily produced in articulate speech?

Ans. There are. In certain forms of hearing trumpet, some of which are described in paragraph 642, page 810, of the New York edition of Everett's Deschanel's "Natural Philosophy," a thin membrane is stretched across the interior of the trumpet. Also in the case of the phonautograph we have an example of such use of a stretched membrane.

3210

Int. 104. Suppose Mr. Bell's harp apparatus were constructed with a number of reeds sufficiently large to embrace every tone used in articulate speech, say, for example, a thousand, and you spoke to the transmitting instrument, what would determine which of these thousand tones would be reproduced at the receiving end?

Ans. Simply the pitch of these vibrations which exist in the air at the transmitter and which are produced by the voice.

Int. 105. Suppose now you wished to produce at the receiving end different tones still within the limits of the capacity of the instrument already stated, how would you bring about that result?

Ans. Simply by producing the tones in question in the neighborhood of the transmitter so that the air about the reeds might be set into the vibration characteristic of those tones.

Int. 106. Would or would not it be necessary for that purpose to change the physical structure or adjustment of any part of the instrument?

Ans. It would not.

Int. 107. Suppose now you wished to produce at the receiving end tones of a voice which went outside of the limits of the capacity of the thousand reed instrument, what would you have to do in that case?

Ans. I should either have to add additional reeds or else vary the pitch of the original reeds by mechanical means, which latter operation would of course render the apparatus insensitive to certain tones to which it would previously respond. That is, in such a case I should alter the physical construction of the instrument.

Int. 108. Suppose now the hypothetical instrument of Mr. Pope had the capacity to produce a thousand different tones and you wished to produce a particular ten of them. How would you bring about that result and cause the instrument to sound those ten and not others?

Ans. By operating on certain keys or performing some other corresponding mechanical action.

Int. 109. Suppose now, having made the Bell harp reproduce certain tones at the receiving station by uttering the same tones in the presence of the transmitting instrument, you wished to repro-

3211

duce those same tones by the same instrument with greater loudness, how would you accomplish that result?

Ans. By simply producing a louder sound in the neighborhood of the transmitter.

Int. 110. Suppose now, having caused Mr. Pope's apparatus to produce certain tones, you wished to make the same apparatus produce the same tones with greater loudness, how would you accomplish that result? I do not mean to ask you as to the exact details of such an hypothetical and unconstructed instrument, but to state generally.

Ans. Only by some variation in the apparatus produced by mechanical means.

Int. 111. Please to explain the difference between the vibrations which a reed of Mr. Bell's harp apparatus would undergo when a sound was uttered in front of it, from that which it would undergo when a continuous blast of air, as from an organ bellows, is directed against it.

Ans. The way in which such a reed would be set into vibration under the influence of a note produced in its neighborhood and causing vibrations in the air of the same period as that in which the reed is so tuned as to vibrate, which is a very simple case of sympathetic vibration, I have already explained. If such a reed were actually to be set into vibration under the influence of a continuous and steady blast of air, the action, as I understand it, would be this: The wind, acting simply as wind to produce a pressure upon the reed, would merely hold it deflected from its normal position, and no vibration would ensue because of this pressure, were it, as in the case supposed, continuous. But the whirring noise produced as the air strikes against the reed is due to vibrations which are set up in the air in consequence of its own elasticity when it strikes an obstacle. If any of these vibrations have a period identical with that in which the reed can vibrate freely, the reed may take up a vibration in consequence of the action of these vibrating air particles upon it. The note which such a reed gives out is, therefore, necessarily, identical with that which it would give if vibrated freely.

Int. 112. Please look at your sixtieth and sixty-first cross-answers. State whether the knowledge which you possessed at the date of Mr.

Bell's patent, March 7, 1876, would have enabled you, without further experiment, to determine a size of membrane and a size and shape of armature fit to be used in such an apparatus as that shown in Fig. 7 of said patent, and the part of the specification particularly relating therero, and state what considerations would have governed you in selecting a size of membrane and a size and shape of armature.

Ans. From previous experiments, especially those with the phonautograph, I should have known that a membrane from two and a half to three inches in diameter, or thereabouts, was certainly capable of responding to a great number of the tones constituting articulate speech. From certain of these experiments I should also have inferred that an armature of the relative length represented in Fig. 7 referred to, having a thickness varying, perhaps, from that of a heavy clockspring to a thickness considerably greater, and of a breadth not greatly exceeding the diameter of the core of an electromagnet of such moderate size as could readily be held in the hand, and such as is figured in Mr. Bell's drawing, could be set in vibration by such a membrane when acted upon by the voice.

Int. 113. Were the experiments you refer to in your last answer private experiments of your own or matters known only to yourself, or were they matters of general knowledge among persons skilled on the subject?

Ans. They were matters of general knowledge.

Cross Examination resumed.

Cross-Int. 114. Before the grant of Mr. Bell's patent in March, 1876, had you any knowledge of instruments in which a vibrating diaphragm moved, by its vibrations, a weight attached to the diaphragm and oscillated around a hinge?

Ans. I had.

Cross-Int. 115. What sort of instruments do you refer to?

Ans. In the phonautograph, as modified by Mr. Morey, in the experiments to which I had occasion to refer in connection with the curves exhibited in the early portion of this examination, a long wooden rod was attached in the manner described, and although its weight was inconsiderable when compared with that of a metallic rod

3213

of the same size and same dimensions, yet its moment of inertia, upon which the ease with which the membrane could set it in vibration would depend, was proportionally much greater than its weight.

Cross-Int. 116. If you pluck one of the reeds of Mr. Bell's harp telephone by hand, will you thus set it in vibration according to its proper rate?

Ans. I should.

Cross-Int. 117. Producing its appropriate musical tone?

Ans. Yes.

Cross-Int. 118. And I suppose that tone and no other will be reproduced at the receiving end.

Ans. It would.

Cross-Int. 119. The same thing would happen if you tapped one of the reeds properly with a muffled hammer, would it?

Ans. It would.

Cross-Int. 120. And would the amplitude of the vibrations of the reed so plucked or struck, and the consequent loudness of the tone heard at the receiving station, depend upon the amount of force with which the reed was plucked or struck?

Ans. They would.

Cross-Int. 121. These same things would be true where two or more of the reeds of Bell's harp were simultaneously set in vibration in the manner described: the compound vibration so produced would pass over the line and cause the correspondingly tuned reeds at the receiving end to vibrate each with the amplitude, or nearly so, of the vibration of its mate at the transmitting end?

Ans. It would.

CHAS. R. CROSS.

Attest: W. P. PREBLE, JR., *Examiner.*

3214

DEPOSITION OF GARDINER G. HUBBARD.

Direct Examination by J. J. STORROW, Esq., *of Counsel for Complainants.*

BOSTON, June 25, 1879.

Int. 1. Please state your name, age, residence, and occupation.

Ans. Gardiner G. Hubbard; fifty-six; my residence during the last winter has been at Washington, D. C.; counsellor at law.

Int. 2. Are you connected with the Bell Telephone Company, and how long have you been so connected?

Ans. I have been connected with it since its formation. Before that I was trustee for the owners of the patents from July, 1877. Before that time I was interested in the patents as a part owner.

Int. 3. When did you first become interested in Mr. A. G. Bell's electrical inventions?

Ans. In August or September, 1874.

Int. 4. Will you state what particular circumstance, if any, attracted your attention to them?

Ans. Mr. Bell was playing on the piano at my house and suddenly stopped and asked me if I knew that in singing into the piano the proper note would respond, that is, if he sang the note "do," "do" would respond from the piano. That if two pianos in different places were connected by a wire, and the key of one was played upon, both being connected in a telegraphic circuit, the other would respond. I then asked him what value there was to that fact. He replied that by means of it telegraphic communications could be carried on between two places to much greater advantage than by the Morse instruments. This conversation resulted in an arrangement with him and Mr. Thomas Sanders, who was then associated with him, by which I became one-third owner in Mr. Bell's telegraphic inventions.

Int. 5. Whether or not Mr. Bell ever spoke to you about a harp arrangement, so called, shown in the defendant's Exhibit "Second Extract from Bell's London Lecture," and, if so, when did he first speak to you about it?

Ans. I know that he spoke to me about some harp arrangement,

3215

and that it was substantially like the one referred to. The conversation was in the fall of 1874 or spring of 1875. I was then living in Cambridge, Mass., in the summer, spending my winters in Washington, leaving Cambridge in that and subsequent years early in December, and returning in the succeeding spring or summer, after the adjournment of Congress. In the spring of 1875 Congress adjourned the 4th of March, and I returned shortly after that time to Cambridge.

Int. 6. Did he describe to you by what agency the reeds of the transmitting harp were to be set in operation, and, if so, what did he say in substance?

Ans. I think he did. They were to be set in operation by "plucking," as I think he called it, a little strip of metal fastened at one end. There was to be a succession of these representing the different notes. Two corresponding instruments connected by a telegraphic wire, so that when one of these keys was plucked the corresponding one would vibrate.

Int. 7. What did he say about speaking or singing in the vicinity of one of these harps, and the effect of such action?

Ans. He had a good deal to say in the spring and summer of 1875 in regard to the sound waves produced by two musical instruments attached at opposite ends of the wire, and the ability by playing on one to produce the corresponding note in the other and the possibility of causing a spoken word to be transmitted, but as I had no knowledge of or ear for music, and no belief in his ability to transmit vocal speech, I did not fully comprehend his ideas, or rather the mechanism by which he expected to produce his results. Mr. Bell, at my request, was in the habit from time to time of writing letters to me recording the progress that he made, that I might have the knowledge of what he was doing, and evidence to be used if it should be required, as I believed his inventions would be of very great pecuniary value, and therefore, probably litigated, and by reference to these letters I have refreshed my recollection of these subjects.

Int. 8. Please to look at the letter now shown you. State when and where it is dated, to whom it is addressed, in whose handwriting it is, and by whom it is signed, and whether you received it at or about the time of its date.

Ans. Salem, Mass., May 4, 1875, is the date; it is addressed to me in the handwriting of and signed by Mr. Bell; and was received by me about the time of its date.

Int. 9. Please to answer the same question about each of the letters now shown you.

Ans. The next is dated Salem, Mass., June 2, 1875, addressed to me in the handwriting and signed by Mr. Bell. The third is dated Salem, Mass., June 28, 1875, addressed to me in the handwriting of Mr. Bell and signed by him. The next Salem, Mass., July 1, 1875, addressed to me in the handwriting of and signed by Mr. Bell. The next is Salem, Mass., July 7, 1875, addressed to me in the same handwriting and same signature. The next is dated Salem, Mass., Aug. 14, 1875, addressed to me, same handwriting and signature. The next is dated Toronto, Sept. 28, 1875, addressed to me in the handwriting of and signed by Mr. Bell. All these letters were received by me at or about the time of their date.

Int. 10. All the letters dated at Salem refer to certain apparatus which the writer says he was using or experimenting with at Salem or Boston. Did you see any of the apparatus referred to in each of those letters respectively, and if so, when and where for the first time?

Ans. I made an arrangement with Mr. Chas. Williams, Jr., manufacturer of electrical instruments, by which he furnished machinery, and one of his workmen, Mr. Watson, to make such instruments as Mr. Bell requested. I was in the habit of going very frequently to Mr. Williams' shop to see what was going on, and believe that I there saw the various instruments, as well as many others, described in these letters. I was more particular to see the things described in the letters, as they were supposed to be of the most importance, and should have noticed if there was any omission of the things described in the letters. Most of them I have a distant recollection of. On further reflection I think Mr. Bell may have made the first arrangement with Mr. Williams.

Int. 11. Do you remember any apparatus or experiment made at the time of those letters in which a sound was made on the receiving instrument, by plucking with the finger or by any other

3217

mechanical means, a reed on the transmitting instrument? If so, state whether you saw such an exhibition more than once.

Ans. I recollect distinctly what Mr. Bell calls the steel reed, described in his letter of July 7, 1875, plucking it by the finger and listening to the corresponding instrument vibrating, and think he had a bellows there which he operated, but am not so confident as to the bellows.

Int. 12. Whether or not you remember, during the period of these letters, seeing Mr. Bell have an apparatus in which the reed was attached to a membrane, and if so, how was the membrane to be moved or vibrated?

Ans. I remember distinctly two instruments to each of which a membrane was attached, and think a reed was fastened to the membranes, but I am not certain, and that he undertook to speak to one membrane while Mr. Watson or myself was to hear at the other instrument. The instruments were so arranged that the membranes could be stretched till they were quite tight, like a small drum head. I could hear a sound but could never distinguish any spoken words.

Int. 13. Did you or did you not, at that time, understand that by the instruments you saw, or others similar to them, words had been transmitted and understood by the listener at the receiving station?

[*Objected to as incompetent.*]

Ans. My impression is that when I was witnessing some of these experiments Mr. Watson said he could understand something that was said.

Int. 14. Some of these letters refer to the transmission of spoken messages. Did you at that time understand that Mr. Bell's inventions for the transmission of articulate speech belonged to you and Mr. Sanders under the agreement you have already spoken of, and what did Mr. Sanders claim about it during that summer or autumn?

[*Objected to as incompetent.*]

Ans. I always said that under our agreement we could not claim an invention for the transmission of speech. Mr. Sanders took a different view, Mr. Bell agreed with me in opinion. Finally we referred the question to Mr. Pollok, our attorney. He thought

3218

that considering all the circumstances, as we had advanced the funds which led to the invention, it should be given to us even if not included strictly in the terms of the agreement.

Int. 15. State whether or not Professor Bell talked with you during the summer and autumn of 1875, upon the subject of the electrical transmission of speech, and how much his mind seemed to be occupied with that subject?

Ans. He did speak with me. His mind seemed to me to be occupied with it a great deal more than was to my pecuniary advantage, as I did not then believe the transmission of speech could ever be made commercially valuable, and I at several times remonstrated with him for spending so much time upon the subject.

Int. 16. What did you want him to spend his time upon, and why?

Ans. Upon instruments that would transmit many musical notes simultaneously, or upon an autograph telegraph upon which he was working, as I believed such instruments would be of more pecuniary value than any instrument for transmitting speech.

Int. 17. The letter of Aug. 14 suggests that a caveat or patent be immediately taken out. Was that done, and, if not, why not?

Ans. I advised him not to take out a caveat, as I had been informed by Mr. Pollok that a caveat was a distinct declaration that you had not made an invention, and therefore he should take out a patent at once. This he declined to do, as he wished to take out patents simultaneously in England and America. He had then no arrangement for taking out foreign patents, and was unable to incur the expense, whi'e I was unwilling to incur that expense.

Int. 18. State what you know as to any delay in taking out the American patent, caused by his desire to take out foreign patents, and whether at any time afterward you offered to bear the expense of taking out foreign patents, and, if so, why.

Ans. Mr. Bell wrote to friends in Edinburgh asking them to take out foreign patents. Not hearing from them, he applied to George Brown of Toronto, Canada, and received assurances from him in September, 1875, that he would aid him. Mr. Bell's father lived in Canada. He returned from visiting his father early in

3219

October, 1875. Nothing was heard from Mr. Brown for some time, and I was greatly annoyed at this delay in applying for the American patents, and finally offered to furnish the money for the foreign patents simply for the purpose of having our own patents applied for, intending to charge the expense to the American patents, taking no interest in the foreign one, as I did not believe any foreign patent would pay me for looking after it. Mr. Bell was unwilling to be under any pecuniary obligation to me, as he was then hoping to become my son-in-law, and finally promised that, if he could not obtain the money in any other way, he would borrow the money of his father.

Int. 19. Whether or not the patents referred to in your last answer were intended to cover the speaking telephone?

[*Objected to as incompetent.*]

Ans. They were, and that was, in Mr. Bell's view, the principal feature in them, and on that account he was so anxious to have them taken out in England, as he believed it was a very wonderful invention.

Int. 20. State when you first saw or had in your possession the specification of Mr. Bell's patent of March 7, 1876, and when, if ever, you took it to Washington.

Ans. I saw the specification of the speaking telephone in October, 1875. I believe it was substantially like the one for which the Letters Patent were issued, though several changes were made in it subsequent to my first seeing it. I believe I took it with me to Washington in the first of December, 1875; I showed it to Mr. Pollok, brought it back with me on leaving Washington, Dec. 14 or 15, then took it with me on my return to Washington, which was, I think, on the 10th of January, 1876, showed it again to Mr. Pollok, then I returned it to Mr. Bell for his signature and oath.

Int. 21. Will you state in this connection when and where the specification that was filed in the Patent Office, Feb. 14, 1876, appears to have been signed and sworn to?

Ans. At Boston, Jan. 20, 1876.

Int. 22. State, if you know, why it was not immediately filed in the Patent Office.

Ans. I met Mr. Bell in New York about Jan. 25, at his request

3220

to meet Mr. George Brown of Toronto. We met Mr. Brown, and he agreed to take out Letters Patent in Great Britain. Mr. Bell gave me his copy of the specification, which I was to take under a promise, which he exacted from me, that it should not be filed at Washington until Mr. Brown should have filed it in England. He did not hear from Mr. Brown as he expected, and finally wrote to me [that if he did not hear by a certain day, that I might file it. I strenuously objected to the least delay, but it was of no avail, as he wished to have it taken out in his native country, that he might there have the benefit of what he believed a great invention.]

[*Passage in brackets objected to as incompetent.*]

Int. 23. State what you did with regard to having Mr. Bell exhibit speaking telephones at the Centennial Exhibition.

Ans. I had charge of the educational exhibit of the State of Massachusetts at the Centennial, and was very anxious to have Mr. Bell exhibit it there. This he at first declined to do, but finally yielded to my wishes, and it was entered some time after the opening of the exhibition, and formed a part of our educational exhibit.

Int. 24. What instruments of his do you recollect seeing on exhibition there relating to electrical telephony?

Ans. He had his speaking telephone, consisting of the transmitter and, I think, two receivers; and a long bottle with a cork and a rod projecting through the cork into the water for exhibiting some other form of accomplishing this same end. I think there was some other apparatus connected with the bottle.

Int. 25. What did you have to do with the exhibition before the judges on Sunday, or in preparing for it?

Ans. I made arrangements with Professor Barker and others for an exhibition on Sunday, to take place immediately after the exhibition of Mr. Gray's telephone, at which it was understood the Emperor of Brazil, Sir William Thompson and some, if not all, of the judges, were to be present. As the weather was very hot I was tired out, and Mr. Bell consented to my leaving that evening, if my nephew, Mr. William Hubbard, for whom I had telegraphed to Cambridge, came on. He arrived at midnight, Saturday, and I left by the same train for Washington.

Int. 26. Please state when you first heard Professor Dolbear had

made any invention relating to the speaking telephone, and state what you then heard, what inquiries you made thereupon, and what conclusions you arrived at as to the bearing of what you had heard upon the rights and interests of yourself and Mr. Bell.

[*Objected to as incompetent.*]

Ans. Mr. P. D. Richards, of Somerville, was employed by me as an assistant at Philadelphia, in charge of the educational exhibit. He was a friend of Mr. Dolbear, and on my return to Boston in the Christmas holidays, he was closing up our exhibit, and spoke to me of the great improvement which he said his friend, Professor Dolbear, of Tufts College, had made in the telephone. He described the invention to me, advising me to purchase it. I mentioned it to Mr. Bell, he said [it was nothing new, as he had found it out months before.] I therefore came to the conclusion that it was of no value to us, and declined to have anything to do with it, and did not even see Mr. Dolbear.

[*Passage in brackets objected to as incompetent.*]

Int. 27. In Mr. Dolbear's sixty-third cross-answer, page 298, of the record, is a letter from him to Professor Bell, making some statement regarding Professor Dolbear's inventions, and asking in substance that Professor Bell in his public utterances should speak of Professor Dolbear's claims. State whether or not you advised with Professor Bell on the subject of that letter, and what you advised him with regard to the public statements Professor Dolbear desired him to make, and why you so advised him.

Ans. The letter was received, I think, the afternoon or the evening of the lecture, or at any rate, Mr. Bell first showed it to me at that time, saying that he proposed to speak of Mr. Dolbear's inventions in telephony at his lecture. I advised him to do nothing of the kind, as he had no knowledge of anything that Mr. Dolbear had done excepting from his own statements, and he might thereby give credit to Mr. Dolbear to which he was not entitled. There were three of these lectures, and this was the second or third.

Int. 28. Pages 310 and 311 of the record contain two letters written by you to Professor Dolbear referring to an interview with Professor Dolbear at your house, which I understand to be the one referred to in his testimony. Please state whether the statements

contained in those letters, as to what passed at that interview, are or are not correct.

Ans. The statements made in my letters to Mr. Dolbear I then believed to be correct, and I now believe they were true and correct.

Int. 29. State whether or not at that interview, or at any other time, either you, or Mr. Bell in your presence, declared in substance that the invention of using the permanent magnet in a speaking telephone with a coil around one or both ends of it, as shown and described in Bell's patent of Jan. 30, 1877, or the invention of using a metallic disk or diaphragm instead of a membrane in a receiving or transmitting instrument or both, were not made by Mr. Bell until January, 1877. If you have any document which satisfies you that it is impossible that either of you should have made any such statement, please refer to it.

Ans. At that interview Mr. Dolbear, I think, stated that his invention was conceived by him in September or October, 1876. That for about two months subsequent to that time he was sick and unable to do anything about his conception. That he first began working it out in December, 1876, and completed it subsequent to that time, I think in January. I told him that Mr. Bell had made the same invention and put it in operation before he thought of it or ever heard of the telephone, and that an account of an experiment without a battery was published in a Boston daily paper before December, 1876. I think I have letters written to me by Mrs. Hubbard in June or July, 1876, in which she speaks [of the wonderful improvement that Mr. Bell has made in his invention by which he could dispense with any battery.] I do not now remember any other documents than the newspaper and the letters.

[*Passage in brackets objected to as incompetent.*]

Int. 30. State whether or not you find these two features described in the provisional specification of his English patent 4,765, filed in the English Patent Office, Dec. 9, 1876.

[*Objected to as incompetent.*]

Ans. Mr. George Brown did not carry out his agreement with Mr. Bell, and subsequently another specification was prepared including improvements made by Mr. Bell, and in that specification I find reference to this device. This specification seems to have been

3223

filed in the office of the Commissioners of Patents in England the 9th of December, 1876, and must therefore have been forwarded from America some time earlier.

Int. 31. State whether after the exhibition before the judges of the Exhibition at Philadelphia, you made arrangements for the transmission of speech from Boston to Philadelphia, or attempted to make such arrangements.

Ans. Mr. Bell believed that he could transmit speech from Boston to Philadelphia, and was so urgent in his request that I consented to his making the trial. We, each of us, he in Boston and I in Philadelphia, tried to obtain the use of the wires for that purpose, and I think a day was appointed, but, I think, we failed to obtain any wires, as they were all very busy.

[*Adjourned to June* 26.]

BOSTON, June 26, 1879.

[*Witness desires to make the f llowing corrections:*]

In answer to the twenty-ninth interrogatory I stated that in my interview with Mr. Dolbear, I told him that an account of an experiment without a battery was published in a Boston daily paper before December, 1876. On reflection I am satisfied that although that publication was in my mind at the time of the interview, I did not mention the fact of publication to Mr. Dolbear.

In my answer to the twenty-fourth interrogatory I referred to a long bottle with a cork. I am now satisfied, in conference with Mr. Bell, that this long bottle was some kind of a battery with which I was not then acquainted.

Int. 32. Please look at your twenty-second answer, particularly the part that has been objected to. State whether in point of fact you did delay having the application filed in consequence of Mr. Bell's desire to wait until an application could be made in England.

Ans. I did.

Int. 33. State when speaking telephones began to be put out into public use as a general business under license from the Bell patents and under your direction.

Ans. The first were to Mr. Downer, of the firm of Stone & Downer, early in May, 1877. The next were, I think, early in June. During this month I went to the West and distributed tele-

phones at Cleveland, Chicago, and Pittsburg, to gentlemen who desired to act as agents.

Int. 34. Was it during that journey that you furnished General Stager with the telephone referred to on page 381 of the printed record?

Ans. It was. General Stager was an old acquaintance of mine, and therefore I went to him immediately upon my arrival at Chicago.

Int. 35. How many speaking telephones had you put out so licensed prior to the first of November, 1877?

Ans. I had put out a few over 3,000, — 3,060, according to my memorandum.

Int. 36. About how many have there, up to this time, been put out by the Bell Telephone Company or the different organizations which have successively held the Bell patents and with which you have been connected?

Ans. Over 37,000, exclusive of those sold for export.

Int. 37. State whether within your knowledge any telephones not licensed under the Bell patents had been put in use by any persons except the American Speaking Telephone Company, the Western Union Telegraph Company and the corporations connected with them, and under whom the defendant has attempted to justify, as on page 111 of the record, and if so, state to what extent such other parties have put out speaking telephones.

Ans. The first party that I now recollect was Tillotson of New York, Jones and Brothers of Cincinnati, Bunnell of New York, and Hard of Boston. Most of these parties sold all or nearly all of the parts of telephones, sometimes without the diaphragm. Jones and Bunnell and Tillotson probably sold several hundreds. I do not know anything about the number Hard sold.

Int. 38. Do any of these parties continue to sell speaking telephones or parts of telephones, and if not, how have they been stopped?

Ans. When Tillotson was notified of his infringement of the Bell patents he wrote a letter apologizing for the error which he had committed, and promised to make no more, and has made no more that I know of until recently, and these were for the Gold and Stock

filed in the office of the Commissioners of Patents in England the 9th of December, 1876, and must therefore have been forwarded from America some time earlier.

Int. 31. State whether after the exhibition before the judges of the Exhibition at Philadelphia, you made arrangements for the transmission of speech from Boston to Philadelphia, or attempted to make such arrangements.

Ans. Mr. Bell believed that he could transmit speech from Boston to Philadelphia, and was so urgent in his request that I consented to his making the trial. We, each of us, he in Boston and I in Philadelphia, tried to obtain the use of the wires for that purpose, and I think a day was appointed, but, I think, we failed to obtain any wires, as they were all very busy.

[*Adjourned to June* 26.]

BOSTON, June 26, 1879.

[*Witness desires to make the f llowing corrections:*]

In answer to the twenty-ninth interrogatory I stated that in my interview with Mr. Dolbear, I told him that an account of an experiment without a battery was published in a Boston daily paper before December, 1876. On reflection I am satisfied that although that publication was in my mind at the time of the interview, I did not mention the fact of publication to Mr. Dolbear.

In my answer to the twenty-fourth interrogatory I referred to a long bottle with a cork. I am now satisfied, in conference with Mr. Bell, that this long bottle was some kind of a battery with which I was not then acquainted.

Int. 32. Please look at your twenty-second answer, particularly the part that has been objected to. State whether in point of fact you did delay having the application filed in consequence of Mr. Bell's desire to wait until an application could be made in England.

Ans. I did.

Int. 33. State when speaking telephones began to be put out into public use as a general business under license from the Bell patents and under your direction.

Ans. The first were to Mr. Downer, of the firm of Stone & Downer, early in May, 1877. The next were, I think, early in June. During this month I went to the West and distributed tele-

phones at Cleveland, Chicago, and Pittsburg, to gentlemen who desired to act as agents.

Int. 34. Was it during that journey that you furnished General Stager with the telephone referred to on page 381 of the printed record?

Ans. It was. General Stager was an old acquaintance of mine, and therefore I went to him immediately upon my arrival at Chicago.

Int. 35. How many speaking telephones had you put out so licensed prior to the first of November, 1877?

Ans. I had put out a few over 3,000, — 3,060, according to my memorandum.

Int. 36. About how many have there, up to this time, been put out by the Bell Telephone Company or the different organizations which have successively held the Bell patents and with which you have been connected?

Ans. Over 37,000, exclusive of those sold for export.

Int. 37. State whether within your knowledge any telephones not licensed under the Bell patents had been put in use by any persons except the American Speaking Telephone Company, the Western Union Telegraph Company and the corporations connected with them, and under whom the defendant has attempted to justify, as on page 111 of the record, and if so, state to what extent such other parties have put out speaking telephones.

Ans. The first party that I now recollect was Tillotson of New York, Jones and Brothers of Cincinnati, Bunnell of New York, and Hard of Boston. Most of these parties sold all or nearly all of the parts of telephones, sometimes without the diaphragm. Jones and Bunnell and Tillotson probably sold several hundreds. I do not know anything about the number Hard sold.

Int. 38. Do any of these parties continue to sell speaking telephones or parts of telephones, and if not, how have they been stopped?

Ans. When Tillotson was notified of his infringement of the Bell patents he wrote a letter apologizing for the error which he had committed, and promised to make no more, and has made no more that I know of until recently, and these were for the Gold and Stock

3225

Telegraph Company. A bill in equity was brought against Jones by myself as trustee, on the Bell patents, and after a hearing on bill, answer and affidavits, an injunction was granted by Judge Baxter of the Circuit Court of the United States. A bill in equity was brought against Bunnell in the New York Circuit, answer filed and injunction granted. This bill was brought, I think, in the name of the Bell Telephone Company. A bill was also brought against Hard in Boston and an injunction obtained. I did not have the immediate direction of this last suit. I am not aware of any parties having manufactured telephones or parts of them in violation of our patents for several months past, except those claiming under Mr. Gray or the Western Union.

[*Cross examination waived.*]

[*The letters referred to by the witness, and dated Salem, Mass., May* 4, 1875, *June* 20, 1875, *June* 28, 1875, *July* 1, 1875, *July* 7, 1875, *and August* 14, 1875, *and one dated Toronto, September* 28, 1875, *are marked by the examiner with his initials for identification.*]

GARDINER G. HUBBARD.

Attest: W. P. PRERLE, Jr., *Examiner.*

DEPOSITION OF ALEXANDER GRAHAM BELL.

BOSTON, July 8, 1879.

Direct Examination by J. J. STORROW, Esq., *of Counsel for Complainants.*

Int. 1. Please state your name, age, residence, and occupation, and whether you are the Mr. Bell who is mentioned in the bill of complaint in this case.

Ans. I am the Alexander Graham Bell alluded to in the bill of complaint; age thirty-two years; residence, Cambridge; occupation, electrician.

Int. 2. How early and why was your attention called to the composition and production of vocal sounds?

Ans. My father was a teacher of articulation, and as he intended

3226

me to follow his own profession, he very early gave me instruction in the anatomy of the vocal organs, the functions of the various organs of speech, and in subjects bearing generally upon the science of vocal physiology.

Int. 3. Did you, at an early age, begin to make experiments in the artificial production of vocal sounds, or speech, and in the construction of apparatus for that purpose; and if so, what did you do?

Ans. I remember, when I was quite a child, that my father spoke to me of some automaton speaking machine that he had seen, and aroused so much interest in me that I determined to attempt the construction of such an apparatus. I invented a speaking machine, and constructed it, as a boy, and was able to make it articulate one or two simple words.

Int. 4. When and how did you first become acquainted with Helmholtz's discoveries relating to the quality of vocal sounds?

Ans. While in the city of Elgin in Scotland, I made what I deemed to be the first discovery, that the elements of speech were really compound in their nature. My father and I had been struck by the fact that whispered sounds seemed to have a pitch of their own, and we had arranged vowels in musical series. In Elgin I discovered that the position of the vocal organs for any vowel sound yielded a double resonance, and that the resonance tones, proper to the mouth cavities, could be heard mingling with the tones of the voice during the articulation of speech. I made a series of experiments to determine the characteristic tones of the vowels, and communicated the result to Mr. Alexander J. Ellis, of London, who was then, as now, considered an authority in all matters relating to speech. Mr. Ellis replied that my discovery had already been made by Helmholtz, and that Helmholtz had proved the compound nature of speech sounds, by producing such sounds synthetically, by compounding the tones of tuning forks of different pitches, which were kept in continuous vibration by means of an electrical current.

Int. 5. Are the statements contained in Professor Cross' twentieth to twenty-fourth answers, inclusive, pages 391 and 392, a part of the discoveries of Helmholtz, to which you have just alluded?

Ans. They are.

Int. 6. The synthesis of vowel sounds made by Helmholtz was

3227

performed by means of an apparatus consisting of a series of tuning forks of different pitches, all of which were kept in vibration by an electro-magnet placed near their prongs, and through the coils of which intermittent currents were passed by a circuit breaker, so that each tuning fork produced its own tone; and then by means of resonators which could be brought into action at pleasure, Helmholtz intensified these partial tones, more or less, or left some of them inaudible at the distance at which the hearer was placed, and thereby produced the quality of sound of whichever vowel he pleased, as stated in the answers of Mr. Cross just referred to; and this apparatus is shown on pages 176, 178 and 606 of Mr. Ellis's translation of Helmholtz's book. Is it not so? And when, if ever, was this apparatus first described to you?

Ans. It is so. The apparatus was described to me by Mr. Ellis somewhere about the year 1867.

Int. 7. What led you to take an interest in the subject of the production of sound by means of electrical currents?

Ans. I felt that it was my duty, as a student of speech, to master all the researches of others that bore upon what was to be my professional study, and I therefore desired to witness the results obtained by Helmholtz and investigate speech for myself in the manner shown by him.

Int. 8. When did you begin to study and experiment upon the production of sound by electricity, and to what extent did you carry your study and experiments before 1870? State generally.

Ans. Immediately after the conversation with Mr. Ellis, in 1867, I formed the resolution of reproducing Helmholtz's synthetical experiments, and finding that my knowledge of electricity was insufficient to enable me fully to understand his arrangement, I took up seriously the study of electricity. In the city of Bath, England, I made electrical experiments with a friend, and attempted to set a tuning fork in vibration by an electro-magnet. I do not remember the date of my visit to Bath, but I think it was in the year 1868; but it might have been earlier. From the year 1867 to 1870, I made numerous electrical inventions based upon Helmholtz's vowel apparatus, and before I left England, in 1870, I had made up my mind to pursue one of these inventions to a practical end. The invention

3328

to which I allude is now known as harmonic telegraphy or multiple telegraphy.

Int. 9. Did you, at that time, have any ideas as to the practicability of transmission of speech by means of electricity; and, if so, to what extent?

Ans. From the moment that I became aware that Helmholtz had been able to produce vowel sounds with the aid of electricity, I believed that the other elements of speech might also be produced in a similar manner. I did not, while in England, form any idea of the details of an apparatus for producing speech in this way, but I did very distinctly have the belief that it was possible to construct such an apparatus. I am sure that I stated to friends in England, before 1870, my belief that we should one day speak by telegraph, but I had no idea that I would ever myself be connected with the realization of such a plan.

Int. 10. When did you and the rest of your father's family come to America to live?

Ans. In August, 1870, we went to Canada, to Brantford, Ontario, where my parents still reside.

Int. 11. When did you first come to Boston and for what purpose?

Ans. I came to Boston on the 1st of April, 1871, at the invitation of the Boston School Board, for the purpose of carrying on experiments with my father's system of physiological symbols in the Boston School for the Deaf. The object of the experiments was to test the practicability of teaching those who are usually called "deaf and dumb," to use their vocal organs so as to articulate intelligibly.

Int. 12. When did you come to Boston to live permanently?

Ans. On the 1st of October, 1872.

Int. 13. While you were in Canada and Boston, say up to the year 1873 or 1874, how much attention did you pay to the subject of electricity, and what particular use of electricity did you study and experiment upon?

Ans. From the moment of my arrival in Canada in 1870, up to the commencement of 1874, my mind was full of the scheme for the multiple transmission of telegraphic messages by means of musical tones to which I have already alluded. Up to October, 1872, I

resided at my father's house in Canada, paying only occasional visits to the United States, each visit continuing for about two months. I had few facilities for experiment in Canada during that time and none in the United States. I occupied myself chiefly during my leisure time in studying the subjects of electricity and sound, and in developing theoretically the practical details of my system of harmonic telegraphy. I also made such experiments as I could with the limited facilities at my command, at my father's house in Canada. From October, 1872, to the commencement of 1874, I devoted all my spare time to practical experiments relating to the production of sounds by electrical means, with the object of reducing to practice the system of harmonic telegraphy. My daytime was completely occupied with professional work, and I carried on my electrical experiments chiefly at night.

Int. 14. I call your attention to Figures 1 and 2 in the drawing now shown you: when did you construct and use the apparatus therein shown?

(NOV. 1873)

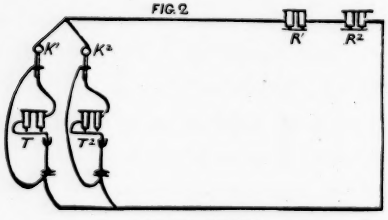

(NOV. 1873)

Ans. In November, 1873.

Int. 15. Where?

Ans. In Salem, Mass.

Int. 16. Have you one of the originals of the apparatus there shown? If so, please produce it and state which of those figures it is like.

Ans. I have and I now produce it. It is a portion of a transmitting instrument like that shown at T, Figure 1. All the parts are there except the mercury cup and wire to dip into it. One screw cup and a connecting wire also missing.

Int. 17. When and upon what occasion were the Figures 1 and 2, or the figures of which these are lithographic reproductions, drawn by you?

Ans. They were drawn by me some time before the 27th of April, 1876, as part of the illustrations of my preliminary statement in an interference at the Patent Office upon harmonic telegraphy.

Int. 18. State whether you used at that time, in 1873, similar reeds and electro-magnets as receivers, attaching the reed directly to the base or a standard coming from the base instead of using the large box shown in these figures?

Ans. I did, in November, 1873. The receiving instrument usually employed by me at that time consisted of an arrangement almost identical with the instrument now shown. This very instrument was frequently used by me at that time as a receiver, by untwisting the wires which connect the electro-magnet with the steel plate armature and passing the intermittent current from one of the interrupters through the coils of the electro-magnet, without passing through the plate. During the month of November, 1873, I varied the shape and size of the frame holding the receiver so as more conveniently to get at the plate in order to tune it to its proper transmitter. One of my favorite forms of receivers consisted of an arrangement substantially like the model shown, turned upside down, with the bottom of the box (then forming the top) removed, so that the reed was attached to a standard coming from the base. I found this form especially advantageous, as I could remove the plate and substitute others of different lengths and thickness.

I now make a drawing of my favorite form of receiving instrument in November, 1873.

FIGURE 3

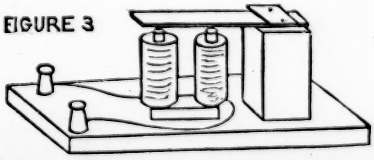

3231

Int. 19. If you ever heard, from a single one of those receivers, tones of different pitches transmitted by transmitters of different pitch, please state when you first did so, describe what you heard, and the circumstances under which you heard it.

Ans. In November, 1873, I arranged two current interrupters and two harmonic receivers upon a single circuit, as shown in Figure 2. The details of the instruments will be understood from Figure 1. The plate armature of the receiver R^1 was intended to have the same normal rate of vibration as that of the interrupter T^1, and the plate armature of R^2 was intended to have the same rate as that of T^2. It was expected that upon depressing the key K^1, the intermittent current from the interrupter T^1 would traverse the circuit in which the receivers R^1 and R^2 were placed, and cause the reed of R^1 to be thrown violently into vibration, so as to produce its musical tone, and that the reed of R^2 would not respond in the same manner. It was also anticipated that upon depressing the key K^2, the reed of R^2 would be thrown violently into vibration, but that that of R^1 would not. And that upon depressing both keys K^1 and K^2 simultaneously, the reeds of both receiving instruments R^1 and R^2 would be thrown violently into vibration, producing musical tones at the receiving station of similar pitch to the tones produced at the transmitting station by the vibration of the interrupters T^1 and T^2. Upon making the experiment, the results were as follows: Upon depressing K^1, the reed of R^1 was thrown violently into vibration, as had been anticipated, producing a musical tone similar in pitch to that produced by T^1, and R^2 was not sensibly affected, save by a slight trembling, which was perceptible to the sense of touch. Upon depressing the key K^2, neither of the reeds R^1 and R^2 was thrown into violent vibration, but both were affected by a slight trembling, which could be felt with the finger. Upon depressing K^1 and K^2 simultaneously, the reed R^1 was thrown into violent vibration, but that of R^2 was not. The results were in accordance with the theory upon which my system of harmonic telegraphy was based, only upon the supposition that the reed of R^2 was not in unison with that of T^2. Upon placing my teeth against the frame to which the reed R^2 was attached and plucking the reed with my finger, I clearly perceived that its pitch was different from that of its proper trans-

mitter T^2. I tried many experiments to tune the reed of R^2, and in the course of these experiments I remodeled the receiving instrument R^2, as shown in Figure 3, and shifted the position of the reed upon its support, so as to make its free portion longer or shorter, in the attempt to cause its normal rate of vibration to correspond to that of its proper transmitter. I also made the free portion of the reed purposely too short, so that it should have a higher rate of vibration than that of its proper transmitter, and sought to lower its tone by weighting it with lumps of wax. During the course of these experiments, while I happened to have the keys K^1 and K^2 simultaneously depressed, the idea occurred to place my ear against the receiving reed shown in Figure 3, which was trembling perceptibly to the sense of touch, but which had not been properly adjusted, so as to correspond with its proper transmitter. Upon placing my ear against the reed, I heard two musical tones, the unisons respectively of those produced by T^1 and T^2, seemingly proceeding from that one reed. The reed of R^1, however, was vibrating with great violence in another part of the same room, producing a tone of similar pitch to that produced by T^1, so that I was uncertain whether that tone was produced from the instrument at my ear, or whether it had been mechanically communicated to my ear through the air from the receiver R^1. To test this point, I removed the receiver R^1 from the circuit, leaving R^2, which was then in the condition shown in Figure 3, in circuit with the two transmitters T^1 and T^2. Upon placing my ear against the receiver R^2, I then clearly perceived two tones proceeding from it, which were similar in pitch to the tones produced by the transmitters T^1 and T^2, and different from that normally produced by the reed of R^2 when plucked by the finger. This experiment was made in Salem, Massachusetts, during the month of November, 1873.

Int. 20. Whether or not, afterwards, in the ordinary course of your operations in harmonic telegraphy or with vibrating reed receivers, you availed yourself of this phenomenon of the production in the receiving reed of feeble forced vibrations of the same rate as the rate of the circuit interrupter, but differing in rate from the more ample vibrations which took place when the impulses came with

3233

periods corresponding to the normal rate of the receiving reed, and if so, to what extent, and how often, and for what purposes?

[*Question objected to and withdrawn.*]

Int. 20*a*. Did you afterwards in your ordinary operations in the vibrations of reeds, when used as receivers, avail yourself of the phenomenon described in your last answer, and if so to what extent and for what purpose?

Ans. It was constantly my custom after November, 1873, to observe the feeble forced vibrations produced in the reed of a receiver by the action of a current interrupter of different rate from its own, by placing my ear against the reed. It was my usual method of ascertaining whether to shorten or lengthen the reed of the receiver. When the tone electrically produced was lower in pitch than that produced by plucking the reed by the finger, I lengthened the free portion of the reed, but when the forced vibrations were of higher rate than the free vibrations of the reed, I shortened the vibratory portion of the reed, and thus adjusted its pitch to correspond to that produced by its proper interrupter.

Int. 21. How early did you arrange your multiple telegraph instruments with an induction coil placed between the interrupter and the receiver?

Ans. In the winter of 1873, I think about December.

Int. 22. State whether the drawing now shown you is a correct representation of the manner in which you arranged the apparatus with an induction coil, and state when and for what purpose this drawing, Figures 4, 5, and 6, was made.

Ans. Figures 4 and 5 represent correctly the manner in which I arranged the apparatus with induction coils, in December, 1873, and Figure 6 represents an improvement of the arrangement, devised about the commencement of the year 1874. This drawing, Figures 4, 5 and 6, was made previously to April 27, 1876, and formed part of the illustrations of my preliminary statement in the harmonic telegraph interference before referred to.

FIG. 4 (DECEMBER 1873)

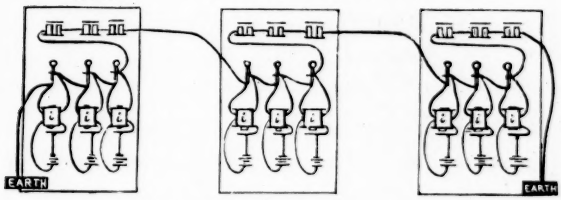

i, i, &c. INDUCTION COILS.

(DECEMBER 1873)

FIG. 5

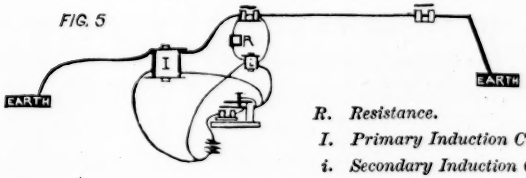

R. Resistance.
I. Primary Induction Coil.
i. Secondary Induction Coil.

FIG. 6 (JANUARY OR FEBRUARY 1874)

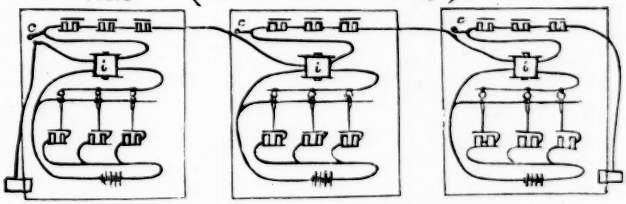

i i. Induction Coils. c c. Cut-offs.

Int. 23. When, if ever, did you become familiar with the Scott phonautograph, referred to in Professor Cross's twenty-eighth answer, page 395?

Ans. In the winter of 1873–74.

Int. 24. Did you during that winter construct any phonautographs yourself?

Ans. I did; early in 1874.

Int. 25. In those that you constructed, how was the rod which carried the style attached to the phonautograph frame, and how was it moved by the membrane?

Ans. One end of the rod was hinged by means of a piece of leather or calico to the edge of the circular frame carrying the membrane. A small piece of cork was fastened to the centre of the

3233

periods corresponding to the normal rate of the receiving reed, and if so, to what extent, and how often, and for what purposes?

[*Question objected to and withdrawn.*]

Int. 20*a*. Did you afterwards in your ordinary operations in the vibrations of reeds, when used as receivers, avail yourself of the phenomenon described in your last answer, and if so to what extent and for what purpose?

Ans. It was constantly my custom after November, 1873, to observe the feeble forced vibrations produced in the reed of a receiver by the action of a current interrupter of different rate from its own, by placing my ear against the reed. It was my usual method of ascertaining whether to shorten or lengthen the reed of the receiver. When the tone electrically produced was lower in pitch than that produced by plucking the reed by the finger, I lengthened the free portion of the reed, but when the forced vibrations were of higher rate than the free vibrations of the reed, I shortened the vibratory portion of the reed, and thus adjusted its pitch to correspond to that produced by its proper interrupter.

Int. 21. How early did you arrange your multiple telegraph instruments with an induction coil placed between the interrupter and the receiver?

Ans. In the winter of 1873, I think about December.

Int. 22. State whether the drawing now shown you is a correct representation of the manner in which you arranged the apparatus with an induction coil, and state when and for what purpose this drawing, Figures 4, 5, and 6, was made.

Ans. Figures 4 and 5 represent correctly the manner in which I arranged the apparatus with induction coils, in December, 1873, and Figure 6 represents an improvement of the arrangement, devised about the commencement of the year 1874. This drawing, Figures 4, 5 and 6, was made previously to April 27, 1876, and formed part of the illustrations of my preliminary statement in the harmonic telegraph interference before referred to.

3234

FIG. 4 (DECEMBER 1873)

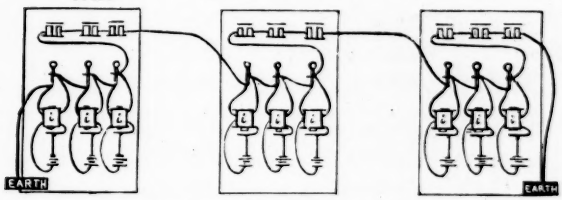

i, i, &c. INDUCTION COILS.

(DECEMBER 1873)

FIG. 5

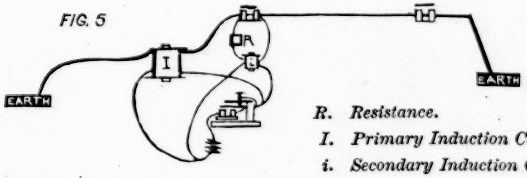

R. Resistance.
I. Primary Induction Coil.
i. Secondary Induction Coil.

FIG. 6 (JANUARY OR FEBRUARY 1874)

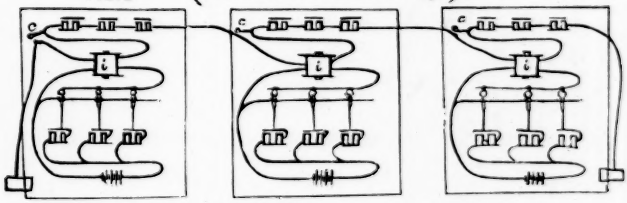

i i. Induction Coils. c c. Cut-offs.

Int. 23. When, if ever, did you become familiar with the Scott phonautograph, referred to in Professor Cross's twenty-eighth answer, page 395?

Ans. In the winter of 1873–74.

Int. 24. Did you during that winter construct any phonautographs yourself?

Ans. I did; early in 1874.

Int. 25. In those that you constructed, how was the rod which carried the style attached to the phonautograph frame, and how was it moved by the membrane?

Ans. One end of the rod was hinged by means of a piece of leather or calico to the edge of the circular frame carrying the membrane. A small piece of cork was fastened to the centre of the

3235

membrane and to the rod. Upon uttering a sound in the neighborhood of the membrane it was caused to vibrate, and forced the rod to vibrate also. The free end of the rod projected considerably beyond the opposite edge of the membrane, and its vibrations were recorded on smoked glass.

Int. 26. Did you use in your phonautographs a paraboloidal mirror to concentrate the sound waves between the speaker and the membrane; if not, what form did you give to that part of the apparatus which conducted the sound waves from the mouth of the speaker to the membrane?

Ans. I did not use the paraboloidal mirror excepting in experiments with Professor Cross, at the Institute of Technology, with the instrument he has described in his deposition. In all the phonautographs constructed by myself, in the early part of 1874, I used a rubber tube, with a mouthpiece similar to those employed in speaking tubes.

Int. 27. Whether or not during that winter you devised any apparatus for reproducing, by means of phonautograph sound tracings, sounds similar to those which had made the tracings; and if so, describe what it was and how it was to operate.

Ans. I did. A phonautograph tracing was to be drawn on a hollow metallic cylinder, so arranged as to be capable of rotating on a vertical axis. The tracing was then to be cut so as to form a sinuous slit, and air was to be blown through the tracing from a pipe whose nozzle was contracted to a vertical slit. A pencil of air would thus be expelled at the points of intersection, and the rotation of the cylinder would cause this pencil of air to vibrate in the same manner as the air had been moved by the voice of the speaker when the original tracing had been made. I presumed, therefore, that the rotation of the cylinder would cause a sound to be heard similar in quality to that which had produced the tracing.

Int. 28. Did you construct such an apparatus at any time?

Ans. I did not.

Int. 29. Did you, during the year 1874, use any phonautograph of an entirely different character from those which you have described? and if so, what was it?

Ans. I used during the year 1874 a phonautograph which was

3236

made from a human ear. The middle ear was exposed by dissection, and a style of hay was attached to the end of the *incus* in place of the *stapes*. Upon uttering sounds into the external ear, I found that the hay attached to the *incus* vibrated sufficiently to enable me to obtain tracings of vocal sounds upon smoked glass.

Int. 30. Did you, during the year 1873, or 1874, devise a receiver in which there was a polarized reed and an electro-magnet? And if so, describe it, and state when you devised it.

Ans. In the winter of 1873-4 I devised a receiver in which the reeds were to be polarized by being attached to the poles of permanent magnets, and they were to be placed opposite the poles of electro-magnets. My method was to attach one reed to each pole of a permanent horseshoe magnet, the free end of each reed projecting over one pole of a horseshoe electro-magnet. Upon this plan, I had one permanent magnet and one electro-magnet for each pair of reeds.

Int. 31. Where did you spend your summer vacation in 1874?

Ans. In Brantford, Ontario, at my father's house.

Int. 32. During that summer, did you devise a magneto-electric transmitter to work without a battery? And if so, describe it.

Ans. I did. I saw that the receiver with polarized reeds, which I have just described, could be made to produce electrical currents if the reeds were caused to vibrate mechanically. I therefore devised an arrangement whereby each reed should be enclosed in a bed, so arranged that the reed could be set in vibration by wind in the ordinary manner, as in organ reeds.

Int. 33. Is the arrangement you have just referred to shown in the drawing, Figure 7, and if so, when and for what purpose was the drawing, Figure 7, made?

FIG. 7
(SUMMER OF 1874)

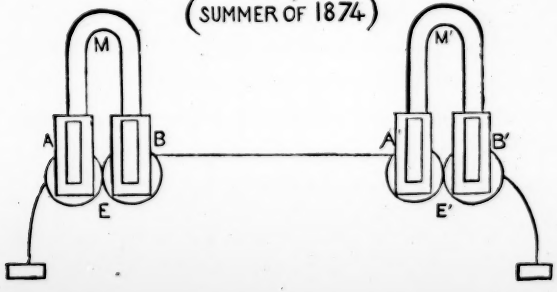

3235

membrane and to the rod. Upon uttering a sound in the neighborhood of the membrane it was caused to vibrate, and forced the rod to vibrate also. The free end of the rod projected considerably beyond the opposite edge of the membrane, and its vibrations were recorded on smoked glass.

Int. 26. Did you use in your phonautographs a paraboloidal mirror to concentrate the sound waves between the speaker and the membrane; if not, what form did you give to that part of the apparatus which conducted the sound waves from the mouth of the speaker to the membrane?

Ans. I did not use the paraboloidal mirror excepting in experiments with Professor Cross, at the Institute of Technology, with the instrument he has described in his deposition. In all the phonautographs constructed by myself, in the early part of 1874, I used a rubber tube, with a mouthpiece similar to those employed in speaking tubes.

Int. 27. Whether or not during that winter you devised any apparatus for reproducing, by means of phonautograph sound tracings, sounds similar to those which had made the tracings; and if so, describe what it was and how it was to operate.

Ans. I did. A phonautograph tracing was to be drawn on a hollow metallic cylinder, so arranged as to be capable of rotating on a vertical axis. The tracing was then to be cut so as to form a sinuous slit, and air was to be blown through the tracing from a pipe whose nozzle was contracted to a vertical slit. A pencil of air would thus be expelled at the points of intersection, and the rotation of the cylinder would cause this pencil of air to vibrate in the same manner as the air had been moved by the voice of the speaker when the original tracing had been made. I presumed, therefore, that the rotation of the cylinder would cause a sound to be heard similar in quality to that which had produced the tracing.

Int. 28. Did you construct such an apparatus at any time?

Ans. I did not.

Int. 29. Did you, during the year 1874, use any phonautograph of an entirely different character from those which you have described? and if so, what was it?

Ans. I used during the year 1874 a phonautograph which was

3236

made from a human ear. The middle ear was exposed by dissection, and a style of hay was attached to the end of the *incus* in place of the *stapes*. Upon uttering sounds into the external ear, I found that the hay attached to the *incus* vibrated sufficiently to enable me to obtain tracings of vocal sounds upon smoked glass.

Int. 30. Did you, during the year 1873, or 1874, devise a receiver in which there was a polarized reed and an electro-magnet? And if so, describe it, and state when you devised it.

Ans. In the winter of 1873-4 I devised a receiver in which the reeds were to be polarized by being attached to the poles of permanent magnets, and they were to be placed opposite the poles of electro-magnets. My method was to attach one reed to each pole of a permanent horseshoe magnet, the free end of each reed projecting over one pole of a horseshoe electro-magnet. Upon this plan, I had one permanent magnet and one electro-magnet for each pair of reeds.

Int. 31. Where did you spend your summer vacation in 1874?

Ans. In Brantford, Ontario, at my father's house.

Int. 32. During that summer, did you devise a magneto-electric transmitter to work without a battery? And if so, describe it.

Ans. I did. I saw that the receiver with polarized reeds, which I have just described, could be made to produce electrical currents if the reeds were caused to vibrate mechanically. I therefore devised an arrangement whereby each reed should be enclosed in a bed, so arranged that the reed could be set in vibration by wind in the ordinary manner, as in organ reeds.

Int. 33. Is the arrangement you have just referred to shown in the drawing, Figure 7, and if so, when and for what purpose was the drawing, Figure 7, made?

FIG. 7
(SUMMER OF 1874)

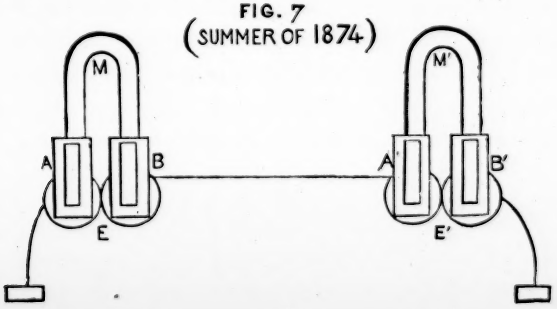

3237

Ans. Two pairs of reeds, arranged in the manner referred to, are shown in Figure 7. This drawing was made as part of the preliminary statement above referred to.

Int. 34. What characteristics of sound did you then understand that that transmitter would produce from the receiver in the apparatus Figure 7?

Ans. I understood that the vibration of one of the reeds of the transmitter would not only cause the forcible vibration of the reed of the receiver of similar pitch to itself, but that the amplitude of the vibration of the transmitting reed would control the amplitude of the vibration of the receiving reed, and hence control the loudness of the sound produced from the receiver.

Int. 35. Why and how would the amplitude of the vibration of the transmitting reed control the amplitude of the vibration of the receiving reed?

Ans. I understood from the well-known laws of magneto-electricity that a current of electricity would be induced in the coils of the electro-magnet E, Figure 7, when any one of the transmitting reeds A moved downwards or upwards, and that the strength of the current would be proportional to the velocity of the motion of the reed. I therefore inferred that as the velocity of motion of the reed was increased when the amplitude of its vibration was increased, that the strength of the current produced by the vibration was also increased. In considering the effect upon the corresponding reed A′ of the receiver, it was evident that the violence of its vibration depended upon the strength of the electrical impulses passed through the coils of the electro-magnet E′. I therefore reasoned that the more violent the vibration of any transmitting reed, the more violent would be the vibration of the corresponding receiving reed, and the less violent the vibration of the one, the less violent the vibration of the other.

Int. 36. In the apparatus with polarized reeds which you have been describing, you appear to have had one horseshoe permanent magnet and one horseshoe electro-magnet for each pair of reeds. Did you during the same summer of 1874 devise any plan for reducing the number of magnets employed, and if so what appa

ratus did you devise for that purpose? Please illustrate your answer by a diagram of it.

Ans. I did.

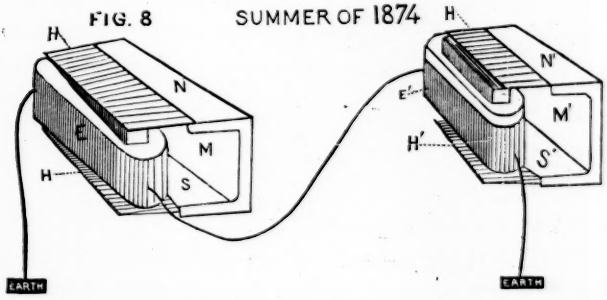

In the apparatus shown in Figure 8, which is one of the illustrations to the preliminary statement referred to before, all the reeds were to be attached to the poles of a single horseshoe magnet and a single elongated straight bar electro-magnet was to be employed. This arrangement was devised during my summer vacation in 1874.

Int. 37. If during that summer you had any ideas concerning the transmission of articulate speech by electricity, state by what kind of an apparatus you thought to do it and how you expected to operate such an apparatus.

Ans. I was at that time acquainted with Helmholtz's theories and experiments, and believed that any of the sounds of speech could be produced by producing the musical tones of which such sounds were known to be composed with their proper relative intensities. I was also familiar with the well-known experiment of articulating to an undamped piano. I had frequently pronounced vowel sounds in the neighborhood of an undamped piano, and had observed that an approximation to the vowel uttered was produced by the vibration of the strings of the piano after my voice had ceased. I knew that those strings of the piano which corresponded in pitch to the fundamental and upper partials or overtones of the vowel uttered, had been set sympathetically into vibration with amplitudes corresponding to the loudness of the component tones, and that they continued vibrating with the proper relations of force for a perceptible time after the voice had ceased, as evidenced by the reproduction from the

3239

piano of the quality of the sound which had been uttered into it. I therefore conceived that a similar apparatus to that shown in Figure 8 could be operated by the voice of a speaker, and that a sound would be produced by the receiving apparatus shown in Figure 8, similar in quality to that which had operated the transmitting apparatus. For those reeds or springs of the transmitting telephone H, Figure 8, which corresponded in pitch to the fundamental and upper partials of any sound uttered in their neighborhood would, like the strings of the piano, be thrown sympathetically into vibration, the amplitude of the vibration of the different reeds corresponding to the loudness of the corresponding partial tones. And the reeds of the receiving telephone H′, corresponding in pitch to the fundamental and upper partials of the sound uttered at the transmitting end, would be thrown into vibration with corresponding relations of force, and a sound would be produced from the receiving instrument H′ of similar composition to that uttered at the transmitting end. Hence the quality of the original sound would be reproduced. I therefore conceived if the reeds or rods of the instruments shown in Figure 8 were made very numerous, and the differences of pitch between adjoining reeds very slight, that a person might speak in the neighborhood of one of the instruments shown in Figure 8, and his articulation be reproduced by the other instrument; and that thus vocal utterance could be electrically transmitted.

Int. 38. Did you ever build such an apparatus as Figure 8; and if not, why not?

Ans. I did not, because of the great number of reeds that would be required, and because I saw that the instrument could be very much simplified.

Int. 39. Did you at any time during that summer conceive of any plan by which you could materially reduce the number of reeds required in such an apparatus for the transmission of speech? and if so, what was your conception, and what modification, if any, did you expect to make in the arrangements for vibrating the transmitting reeds which you did retain?

[*Objected to as incompetent.*]

Ans. In considering the action of the apparatus shown in Figure 8, I saw however numerous might be the reeds which were set

3240

in vibration by the voice of a speaker, that as there was only one electro-magnet an effect would be produced in that magnet which would be a resultant of the vibration of the reeds; and I saw that this resultant effect might be produced in the electro-magnet by a single reed vibrated in such a manner as to represent the resultant of all the vibrations. I conceived that a single reed could be moved by the voice of a speaker in this manner by attaching it to a stretched membrane, and speaking against the membrane.

Int. 40. What experience had you had in vibrating, by means of the human voice, membranes which were so loaded or arranged that some work had to be done by the sound waves besides moving the membrane itself?

Ans. I had made many experiments with phonautographs in which membranes operated by the human voice had not only moved levers of considerable length, at a mechanical disadvantage, but had caused such levers to perform considerable mechanical work in scraping lampblack from glass slides so as to form enlarged tracings of the aerial vibration. I was also familiar with Koenig's Manometric Flame Apparatus, the membrane of which was caused by the voice to vibrate against the pressure of gas admitted into the capsule from the ordinary gas pipes so as to create a sensible vibration in the flame at the orifice of a capillary tube. At the very time also when this conception occurred to me I was obtaining tracings of the vibrations of the bones of a human ear, and I reasoned that the disproportion in mass between the tympanic membrane and the bones that were moved by it was much greater than that existing between a membrane like that used in the phonautograph and the reed which I proposed to operate by it.

[*Adjourned to July* 9, 1879, *at* 11 *A. M.*]

BOSTON, July 9, 1879.

Int. 41. What is the size of the membrane of the human ear?

Ans. The specimen used by me was about the size of a silver half dime.

Int. 42. Did you, at that time, construct the apparatus described in your fortieth answer?

Ans. I did not.

3241

Int. 43. Why not?

Ans. Because I had the idea that the magneto electric currents produced by the operation of the voice would be too feeble to produce practically useful results.

Int. 44. Did you, during that summer and while in Canada, describe to any one that apparatus and communicate to them your idea as to the transmission of articulate speech by it, and if so, to whom?

Ans. I did. I had many conversations on the subject with my father, and I believe with friends, and I distinctly recollect making drawings of the harp arrangement to illustrate the subject to some person or other at my father's house in Canada, during the summer of 1874; and I remember directing some person's attention to the human ear, with which I was experimenting, as a proof of the correctness of my membrane idea. I also have some recollection of having a discussion regarding the membrane idea and directing attention to the massive nature of the bones of the ear when compared to the tympanic membrane. I cannot remember these discussions with any detail, but simply remember holding this human ear in my hand and directing attention to it, as an illustration of some theory I was discussing concerning the reproduction of speech by electrical means.

Int. 45. When did you return to Boston after your vacation in that summer of 1874?

Ans. About the end of September or the first of October.

Int. 46. Did you, after your return to Boston, describe to any one in Boston your harp arrangement or your plan for the transmission of articulate speech, and if so, to whom, when and where?

Ans. I did. I described my method for the transmission of articulate speech to Dr. Clarence J. Blake, at his office in the Hotel Berkeley, a few days after the 21st of October, 1874. I also described this method to Mr. Moses G. Farmer, to Professor Lovering, and to one of the professors of the Institute of Technology, during the latter part of 1874. I also spoke of it to Mr. Thomas Sanders, in Salem, Massachusetts, and to Mr. Gardiner G. Hubbard, in Cambridge, during October, 1874.

Int. 47. Did you at Dr. Blake's, upon the occasion referred to

in your last answer, make any sketches to illustrate your description of your inventions? If so, will you please produce them?

Ans. I did, and I now produce them.

Int. 48. One of these sheets, which is marked "No. 7," contains figures on both sides; please to state what the figures on the first side represent.

Ans. The larger figure on that side, which for convenience I will call Figure 1, though the figures are not numbered in this drawing, refers to my apparatus for inducing currents of electricity by the vibration of polarized reeds, arranged like organ reeds, to be blown by wind, and is the same arrangement shown before in Figure 7, and referred to in my thirty-third answer. The other figure on that side, which I shall call Figure 2, represents an arrangement for increasing the effect produced by the vibration of the reeds. I had the idea that magneto-electric currents generated by the vibration of a polarized tongue were very feeble, and therefore sought to increase the effect by combining together three permanent horseshoe magnets, as illustrated in this figure. Two of these permanent magnets, the poles of which are marked respectively N S, N S, are represented as covered with coils of insulated wire, and between the poles of the opposite magnets are shown in section the ends of the polarized reeds illustrated in plan in Figure 1 of that side.

Int. 49. What do the drawings on the other side of this sheet represent?

Ans. One of them, which I will call Figure 3, represents a galvanometer in circuit with a straight bar electro-magnet, over the pole of which a polarized or magnetical tongue is placed. This drawing was made for the purpose of explaining to Dr. Blake the peculiarities of the electrical current produced by the vibration of a magnet in front of an electro-magnet. The other illustration, which I shall term Figure 4, represents the first apparatus I had conceived for the transmission of vocal utterance electrically. This is the same harp instrument shown before in Figure 8 and referred to in my thirty-sixth answer.

[*Complainants put in the sheet referred to in the last two answers, and it is marked "Complainants' Exhibit* 30, *Dr. C. J. Blake*

3248

Drawings, W. P. Preble, Jr., Examiner," and the figures on it are numbered by the examiner as mentioned by the witness.]

Int. 50. Did you have any conversation on that occasion with Dr. Blake as to whether the human voice could vibrate the membrane with attached armature? And if so, state what and whether any drawings were made by either of you to illustrate that topic.

Ans. I have a recollection of asking Dr. Blake's opinion on this point, and the impression that I got from his remarks was that it could if the membrane were made concave, like that in the human ear, and if the end of the armature were attached, not to the centre of the membrane, but to a point a little to one side, corresponding to the point of attachment of the malleus and tympanic membrane of the ear. I do not recollect whether any drawing was made of this idea at that time, but I remember our discussing the operation of the harp arrangement, marked "Fig. 4," in Exhibit 30, and comparing the apparatus to the organ of Corti in the human ear. I remember also that Dr. Blake suggested that a damping arrangement would have to be attached to the harp arrangement, and that he made a drawing of the manner in which the rods of Corti were damped in the ear.

Int. 51. You say that this first conversation on this subject with Dr. Blake was soon after the 21st of October, 1874. How do you fix that date?

Ans. By reference to a letter that I received from him, dated October 21, 1874, in which he referred to some letter that he had received from Mr. Elisha Gray concerning experiments in telegraphing "vocal" sounds. [I visited Dr. Blake within a day or two after receiving his letter, and told him that I did not wish to see Elisha Gray's letter, as I was then engaged upon the problem of the transmission of articulate speech by electricity and did not wish to be indebted to any one for information upon the subject.] I then explained to him my method and made the drawings that have been put in evidence, and made other drawings illustrating my system of harmonic telegraphy, for which I was then applying for protection in the Patent Office. I know that all these drawings were made within a few days after receiving Dr. Blake's letter referred to.

[*Passage in brackets objected to as incompetent.*]

Int. 52. When did Mr. Sanders and Mr. Hubbard become interested in your inventions for multiple telegraphy?

Ans. In the autumn of 1874, shortly after my return from Canada.

Int. 53. Did you have some conversations with Professor Henry at the Smithsonian Institute in Washington, in February or March, 1875, upon the subject of your electrical inventions?

Ans. I had.

Int. 54. Did you, at or about the time of that conversation, make any memorandum of it, and if so, in what form and for what purpose did you write down the substance of it?

Ans. I did. I wrote an account of my conversation with Professor Henry in the form of a letter for the information of my parents in Canada.

Int. 55. Was that letter sent to your parents at the time it was written?

Ans. It was.

Int. 56. Whether or not the statements contained in that letter as to your conversations with Professor Henry are correct?

Ans. They are.

Int. 57. Will you please produce that letter and read from it as part of your answer what relates to those conversations, omitting the personal and family matters?

[*Objected to as incompetent.*]

Ans. I produce it and read from it the following: —

"292 Essex St., Salem, March 18th, 1875.

"Dear Papa and Mama:

"I have just returned from my trip to New York thoroughly worn out. Found your letters of the 14th inst. awaiting me. I am now beginning to realize the cares and anxieties of being an inventor. In order to complete the apparatus as thoroughly as possible, I have decided to give up all Professional work for some weeks. I have put off all pupils and classes until the 12th of April. Flesh and blood could not stand much longer such a strain as I have had upon me. Professional work is all in confusion, and the only way is to cut the Gordian knot and throw up everything till the end

is achieved. I long to write full accounts to you, and I have delayed writing in order to give a connected narrative of the whole. You seem to think that my anxieties are over, when in truth they are really only beginning.

"Before entering upon explanations, let me ask you first to hunt over all my old letters that you have preserved for everything bearing on the Telegraph. Forward to me at once as evidence. I must take action at once in regard to foreign patents. Will you or uncle help me in this?

"What I would like is this. I have written to my lawyers in Washington to make application for foreign patents on my own responsibility.

"Should I prove unable to pay for these applications at once will you help me? While these applications are being got out I shall write to the Herdmans offering them a share if they will take the pecuniary burden of any interference, etc., that may arise abroad from Mr. Gray. Should they decline — which I should think unlikely — I should of course relinquish a foreign contest. . . .

"Whenever I am free to dispose of my interest in the invention I shall do so, and then you may expect to see Visible Speech go ahead. I can then take up the electro-motor, which I think as valuable an idea as this telegraph.

". . . Now, to resume telegraphy. When I was in Washington I had a letter of introduction to Prof. Henry, who is the Tyndall of America. I had found on enquiry at the Institute of Technology, that some of the points I had discovered in relation to the application of acoustics to telegraphy had been previously discovered by him. I thought I would, therefore, explain all the experiments, and ascertain what was new and what was old. He listened with an unmoved countenance, but with evident interest to all, but when I related a experiment that at first sight seems unimportant, I was startled at the sudden interest manifested.

"I told him that on passing an intermittent current of electricity through an empty helix of insulated copper wire, a noise could be heard proceeding from the coil, similar to that heard from the telephone. He started up, said, 'Is that so? Will you allow me, Mr. Bell, to repeat your experiments, and publish them to the world

3246

through the Smithsonian Institute, of course giving you the credit of the discoveries?'

"I said it would give me extreme pleasure, and added that I had apparatus in Washington, and could show him the experiments myself at any time. He asked if I could do it *then*, if he went with me, and I told him that I had everything in readiness at Mr. Hubbard's house. He said, 'I will go with you now. Have you a carriage here?' I had not, and so he put on his coat and was about to order his carriage, when I offered to save him the trouble of going out on such a raw, damp day, by bringing the apparatus to the Smithsonian Institute. (He was suffering from a cold, and besides is very aged, — I believe about 80 years old.)

"We appointed noon next day for the experiment. I set the instrument working and he sat at a table for a long time with the empty coil of wire against his ear listening to the sound. I felt so much encouraged by his interest that I determined to ask his advice about the apparatus I have designed for the transmission of the human voice by telegraph. I explained the idea and said 'What would you advise me to do, publish it and let others work it out, or attempt to solve the problem myself?' He said he thought it was the germ of a great invention and advised me to work at it myself instead of publishing. I said that I recognized the fact that there were mechanical difficulties in the way that rendered the plan impracticable at the present time. I added that I felt that I had not the electrical knowledge necessary to overcome the difficulties. His laconic answer was, 'GET IT.'

"I cannot tell you how much these two words have encouraged me. I live too much in an atmostphere of discouragement for scientific pursuits. Good ——— is unfortunately one of the *cui bono* people and is too much in the habit of looking at the dark side of things. Such a chimerical idea as telegraphing *vocal sounds* would indeed to *most minds* seem scarcely feasible enough to spend time in working over. I believe however, that it is feasible, and that I have got the cue to the solution of the problem.

"Professor Henry seemed to be much interested in what I told him, and cross-questioned me about my past life, and specially wanted to know where I had studied physics. . . .

"Having left Prof. Henry and Washington I proceeded to New York, where I saw Mr. Orton and Mr. Prescott, the electrician. Arrangements are made for me to bring my instruments to New York and experiment on a real line wire.

"I left Boston last Sunday and called at the office of the Western Union on Monday. Mr. Orton and Mr. Prescott both devoted a large portion of their time in discussing with me the whole plan from its theoretical point of view. Mr. Smith, the manager of the experimental room, was absent from town, but was telegraphed for. He replied that he could not come till next morning. Tuesday forenoon we had Batteries connected and I tuned up my instruments. They went like clock work. I have come to the conclusion that by a happy chance they are much more perfect than I thought at first. The signals are as clear, sharp and rapid as with the ordinary Morse sounder. I connected two Transmitters and two Receivers on only one line and two messages were sent simultaneously.

"We had 100 cells of a battery, and all went well on our artificial circuit. Mr. Prescott then said he would like to see them tried on a real line wire. He telegraphed to Philadelphia to have two wires crossed there so as to give us (practically) a continuous wire from New York to Philadelphia and back. The electro-magnets I employed were not intended for trial on a long line. They were wound with coarse wire and the 'resistance' was only '3 ohms.' Ordinary electro-magnets for actual service on a line have a resistance of about 200 to 600 ohms. None of us, therefore, expected the instruments to work without stronger magnets. But they *did work*. The signals, though feeble, came sharply and concisely through the 200 miles of line wire!!! I suggested trying stronger magnets, so Mr. Prescott ordered the instruments to be taken to the workshop and stronger magnets placed on them. They were to be ready in the afternoon, so I went out to dinner and returned in a couple of hours.

"Rest will form subject for next letter.

"With fond love,

"Your ever affectionate son,

"ALECK."

"PROF. A. M. BELL,
"Brantford, Ontario."

3248

[*The original letter is marked for identification by the examiner, with his initials and the date, July* 9, 1879, *on each of the five leaves.*]

Int. 58. What do you mean by the phrase "visible speech" in that letter?

Ans. "Visible speech" is the name of my father's system of physiological symbols which I was using as a means of teaching articulation to the deaf, and has no reference to electricity or telegraphy.

Int. 59. The letter refers to an interference with Mr. Gray. Were you then in interference with him at the Patent Office; and if so, upon what subject?

Ans. I was then in interference with Mr. Elisha Gray upon the subject of harmonic multiple telegraphy.

Int. 60. The letter refers to an exhibition which you made in the presence of Mr. Orton and Mr. Prescott, of the Western Union Telegraph Company. What kind of apparatus or system was the subject of that exhibition?

Ans. The experiment was made to illustrate my method of multiple transmission of telegraphic messages.

Int. 61. Whether or not you occupied yourself in studying and experimenting upon your electrical inventions during the spring and summer of 1875?

Ans. I did.

Int. 62. Did you, at the time of its date, May 4, 1875, write and send to Mr. Gardiner G. Hubbard a letter which is now shown you, and which was referred to and identified in the deposition of Mr. Hubbard on pages 431 and 440 of the record?

Ans. I did.

Int. 63. Please to read from it, as part of your answer, that part of it which begins at the top of the third page, and from thence to the end.

[*Objected to as incompetent.*]

Ans. I do so. It is as follows: —

3249

"SALEM, MASS., May 4th, 1875.

"DEAR MR. HUBBARD:

" . . . Letter received from Mr. Pope, with directions for preparing paper. Letter received from Prof. Henry of the Smithsonian Institute in answer to one I wrote him some time ago telling him of recent experiments undertaken in order to determine the cause of the sound heard from the empty helix of wire.

"The deduction I had made from the experiments was that an intermittent current of electricity creates a molecular vibration in the conductor through which it is passed. Prof. Henry writes that he believes that my experiments are new, and that my explanation of the cause of the sound is in his opinion correct.

"An experiment which I have long desired to make is at last within my reach. My friend, Don Manuel Fenollosa, whose music rooms are next door to this house, is to allow me to experiment with his pianos. I shall carry a wire from my study into his room to-morrow, and try the effect of passing an intermittent current through the strings of a piano. Unless I am greatly mistaken, the string, whose rate of movement coincides with the molecular vibration induced in the wires by one of my transmitters, will resound loudly.

"Another experiment has occurred to me which, if successful, will pave the way for still greater results than any yet obtained. The strings of a musical instrument in vibrating undergo great changes of *molecular tension*. In fact, the vibration represents the struggle between the tension of the string and the moving force impressed upon it. I have read somewhere that the resistance offered by a wire to the passage of an electrical current is affected by the *tension of the wire*. If this is so, a *continuous current of electricity* passed through a vibrating wire should meet with a varying resistance, and hence a pulsatory action should be induced in the current. If this turns out to be the case, the oscillations of the current should correspond in *amplitude*, as well as in the rate of movement, to the vibrations of the string. One consequence would be that the *timbre* of a sound could be transmitted. The plan for transmitting *timbre*, that I explained to you before, — viz., causing permanent

3250

magnets to *vibrate* in front of electro-magnets, — is chiefly defective on account of the feebleness of the induced currents. If the other plan is successful, the strength of the current can be increased *ad libitum*, without destroying the *relative intensities of the vibrations*.

"Yours Respectfully,

"A. GRAHAM BELL.

"GARDINER G. HUBBARD, Esq.,
"Cambridge, Mass."

Int. 64. In the letter of May 4, you speak of certain experiments which you propose to try, one of which you supposed would cause pulsations or oscillations in the electrical current by means of varying the resistance of its conductors, and you say that one consequence would be that the *timbre* of a sound could be transmitted. How did you expect that this variation of resistance would reproduce the *timbre* of a sound?

Ans. The experiment referred to was tried a day or two after the 4th of May. I expected that an instrument constructed with a large number of wires, arranged as in a piano, could replace the transmitting harp arrangement shown in Figure 8, and referred to in my thirty-sixth answer. I had the idea that magneto-electric currents, generated in the way shown in Figure 8, would be too feeble for practical purposes, and conceived that a more powerful and similar effect could be produced by keeping the electro-motive force of my circuit constant, and interposing a varying resistance. I thought that upon speaking to a harp arrangement of stretched wires, through which a continuous current of electricity was passed, that the strings corresponding in pitch to the musical constituents of the sound uttered, would be thrown sympathetically into vibration, and that the amplitude of the vibration of each string would correspond to the loudness of the corresponding partial tone of the sound uttered, and that the battery current would meet with a varying resistance on account of the varying tension of the wires through which the current was passed, and that the variations in the strength of the current thus produced would cause the vibration of those reeds of the receiving harp arrangement, shown in Figure 8, which corresponded to the stretched strings which were vibrated

3251

by the voice; and that the amplitude of the vibration of each reed would be dependent upon the amplitude of the vibration of the corresponding stretched string, and that thus the quality of the sound produced from the receiving reed arrangement would be similar to the quality or *timbre* of the sound uttered in the neighborhood of the stretched string harp arrangement. I also thought that it might be possible to dispense altogether with the reed arrangement shown in Figure 8, and that a stretched string harp arrangement might be used as a receiver; for I believed at the time this letter was written that the passage of a varying current through a conducting wire occasioned a molecular vibration in that conductor, and I therefore thought that the varying current from a stretched string harp transmitter would, when passed through the strings of another similar apparatus, occasion a molecular vibration in those strings, and that the strings of the receiver, which were in unison with the vibrating strings of the transmitter, would be thrown into sympathetic vibration by the molecular changes, and that the amplitude of the vibration of each of those strings would be dependent upon the amplitude of the vibration of the corresponding strings of the transmitter, and that thus a sound would be produced from the receiver of similar quality or *timbre* to that which occasioned the vibration of the wires of the transmitter. I further thought that a single wire could be used in place of the single reed of my membrane arrangement. My idea was to stretch a wire parallel to the surface of my stretched membrane, and to attach the centre of the membrane to the wire. I presumed that upon speaking to the membrane, the wire would be forced into vibration, and that the changes of tension would produce an effect upon the continuous current passed through the wire similar to the resultant effect produced by the stretched string harp transmitter, and that the quality or *timbre* of the sound uttered against the membrane could be produced from a reed membrane receiver, or from a stretched wire receiver similar to the transmitter employed. I was quite familiar with the fact that the elements of speech differ from one another in *timbre*; and when I speak in this letter of my "plan for transmitting *timbre*," I mean my method of transmitting articulate speech.

3252

Int. 65. What advantage is it in a system of multiple harmonic telegraphy to transmit quality as well as pitch of sound?

Ans. No advantage whatever.

Int. 66. This letter of May 4, 1875, speaks of having received a letter from Mr. Pope about some prepared paper. Was that Mr. Frank L. Pope, the electrician of the Western Union Telegraph Company, and what did you want prepared paper for at that time?

Ans. I believe that was Mr. Frank L. Pope, electrician of the Western Union Telegraph Company. I wanted to obtain chemically prepared paper for use in my system of autographic telegraphy, for which I obtained Letters Patent of the United States in April 6th, 1875.

Int. 67. Please look at the letter now shown you, dated May 24, 1875. State whether you wrote it and sent it to your father at the time of its date, and if so, read it as part of your answer.

[*Objected to as incompetent.*]

Ans. I did, and I now read it.

"SALEM, MASS., May 24th, 1875.

"DEAR PAPA AND MAMA:

"I am so immersed in telegraphy and science that I find it impossible to write freely about anything else, but I feel that at the present time you can scarcely be inclined to listen to anything I have to say on such subjects.

"Since I gave up professional work and devoted myself exclusively to telegraphy, I have been steadily gaining health and strength, and am now in a fit state to encounter Mr. Gray or any one else. The patents that have been granted to me without opposition are, —

"1st. The principle of converting a vibratory motion into a permanent make or break of a local circuit.

"2d. The special form of 'vibratory circuit breaker' put in illustration.

"3d. The autograph telegraph.

"The autograph arrangement is rapidly approaching completion. Already I can copy handwriting *quite legibly*, though not yet neatly. The rate of Transmission by means of my instrument will be exactly ten times more rapid than 'Bakewell's Autograph Telegraph,' in

3253

which the rate is 300 letters per minute. When 3,000 letters per minute can be sent, my telegraph will be the most rapid as well as the cheapest.

"Every moment of my time is devoted to study of electricity and to experiments. The subject broadens. I think that the transmission of the human voice is much more nearly at hand than I had supposed. However, this is kept in the background just now, as every effort is to be made to complete the autograph arrangement, so as to have it used on some line.

"The two patents for the transmission of musical notes are not decided yet. I can't understand why the Interference should not have been declared before this. Here are some late discoveries: 1. The current from one of my instruments passed through an iron wire causes a musical note to issue from the wire. 2. The same effect is produced by passing the current through a piece of carbon. 3. Ditto when it is forced through the plumbago of an ordinary lead pencil!!! No similar effects noted yet with copper, brass, or mercury.

"A still more curious phenomenon is the following: —

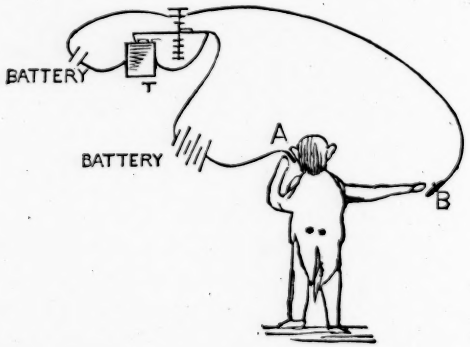

"Two thin strips of brass (A and B) are connected with the wires coming from my Transmitting Instrument, T, and from the Battery. On holding A to my ear I hear nothing, but the moment that I touch B with my finger a musical note is heard to proceed from A!!

"Truly, the more I study electricity and magnetism the more I feel the truth of Hamlet's saying, 'There are more things,' etc.

"I fear that this telegraphic business may force me to remain the greater portion of the summer here, but I cannot tell yet, so many details have to be worked out. My inexperience in such matters is a great drawback. However, Morse conquered his electrical difficulties although he was only a painter, and I don't intend to give in either till all is completed.

"With dear love,

"Yr affectionate son,

"ALECK."

[*The original is marked by the examiner with his initials and the date July* 9, 1879, *for identification.*]

Int. 68. Did you try at Mr. Fenollosa's rooms the experiment proposed in your letter to Mr. Hubbard of May 4, and if so, with what results?

Ans. I tried the experiments proposed within a day or two of the letter to Mr. Hubbard. I first passed an intermittent current from a current interrupter through that string of a piano which seemed to be in unison with the interrupter, and observed whether the string was thrown into sympathetic vibration. It was not. I then listened very closely to the piano, for the purpose of ascertaining whether any noise proceeded from the wire. I heard the pitch of the interrupter, but whether the sound was transmitted through the air from the adjoining house, or proceeded from the string in question, I was not able to satisfy myself. A continuous current was then passed through one of the wires of the piano, and through the coils of an electro-magnet in the adjoining house. Over the pole of that electro-magnet projected the free end of a steel reed which was tuned to the pitch of the string. The string of the piano was then set in vibration by depressing the proper key of the piano, and the effect upon the reed noted. The reed was not thrown sympathetically into vibration. Upon placing my ear against the steel reed, I could hear very faintly the tone of the string, but I was unable to satisfy myself whether the sound I heard was electrically produced, or had been transmitted mechanically to my ear. The piano was in an adjoining house, and the sound was faintly audible in the room where I tried the experiment.

Int. 69. Have you since that day ever tried to work a telephonic receiver by vibrating a stretched wire through which a continuous current of electricity was passing on to the main line in the manner proposed in your letter of May 4? And, if so, describe such experiment with its results, and state when you made it.

Ans. I have made the experiment, but I cannot at the present moment fix the exact date. My impression is it was during the month of February of the present year; at any rate, it was during this present year. I passed a continuous current through a fine stretched iron or steel wire which was placed in one of the rooms in Mr. Williams's building, 109 Court Street. The circuit was continued into another room, and the current passed through the coils of an ordinary hand telephone. While I listened at the telephone, Mr. Edward Wilson kept plucking the stretched wire. I heard distinctly from the telephone a musical tone each time the wire was plucked, and recognized, moreover, the peculiar quality or *timbre* of the wire. I satisfied myself by short circuiting the telephone, and by breaking the circuit, that the sound I heard had been electrically produced.

Int. 70. Please look at the letter now shown you, dated June 2, 1875, which is one of those identified in the deposition of Mr. Hubbard, pages 431 and 440. State whether you wrote it and sent it to Mr. Hubbard at the time of its date; and if so, read it as a part of your answer.

[*Objected to as incompetent.*]

Ans. I did, and I now read it.

"SALEM, MASS., June 2d, 1875.

"DEAR MR. HUBBARD:

"I have accidentally made a discovery of the very greatest importance in regard to the Transmitting Instruments. Indeed, so important does it seem to me that I have written to the Organ Factory to delay the completion of the Reed arrangement until I have had the opportunity of consulting you.

"I have succeeded to-day in transmitting signals *without any battery whatever!*

"The musical note produced at the Receiving End was sensibly the equivalent of that at the Transmitting end in *loudness* as well as pitch.

3257

"I shall call upon you to-morrow (Wednesday) evening as there there are several matters I wish to talk over with you.

"In haste,

"Yours respectfully,

"A. GRAHAM BELL.

"GARDINER G. HUBBARD, Esq.
"Brattle St., Cambridge."

Int. 71. Did you, on the 2d of June, 1875, perform the experiment stated in that letter? And if so, state where, and describe the experiment fully.

Ans. I did. The experiment was made in the upper part of Mr. Williams's building, No. 109 Court Street, in two small rooms that Mr. Williams had allowed me to use for experimental purposes. I was carrying on a series of experiments for the purpose of perfecting for practical use my system of autograph telegraphy, which was a development of my harmonic telegraph. I had arranged three experimental stations upon a single line wire, which for convenience of reference I shall designate A, B and C. At station A were arranged a number of current interrupters, whose rates of vibration were different, and a number of telegraph keys corresponding to the interrupters. By the depression of any key, the intermittent current from the corresponding interrupter was directed on to the line wire to the stations B and C. At each station, B and C, were placed harmonic receivers corresponding in pitch to the interrupters at station A. Each receiver consisted of a horseshoe electro-magnet, to one pole of which was clamped one end of a steel reed, the free end of which projected over the other pole of the magnet. A coil of insulated wire surrounded that leg of the magnet which was presented to the free end of the reed. Stations A and B were in one room, and station C in the adjoining room. I took charge of stations A and B during the experiment referred to, and Mr. Thomas A. Watson took charge of station C. We were making an experiment to ascertain whether the receiving reeds were properly tuned to their corresponding interrupters, and whether the operation of one interrupter interfered with that of the others when the keys were simultaneously depressed.

3257

I pressed down one key at station A and observed whether the proper reed at station B was thrown into forcible vibration, and Mr. Watson observed whether the proper reed of station C was similarly affected. Upon trying all the keys in succession it was found that one of the receivers at station C failed to respond. As we very often found that the magnets of the receivers were so closely adjusted to the reeds that the reeds would stick to the pole when a powerful current was passed, I thought that this might be the cause of the failure in the present case. I therefore called out to Mr. Watson to pluck the reed with his finger. He did so, and I imagined that the corresponding reed of station B was thrown momentarily into vibration. I was struck by this, as I had not depressed the key of the corresponding interrupter, and could not see where the current came from to operate that receiver. I therefore requested Mr. Watson to pluck the reed at station C a number of times, and found that I had not been mistaken in my observation. To test the matter still further I removed station A from the circuit altogether, and connected the receivers of B and C upon a closed circuit without any battery. Upon plucking with the finger any reed of station C, it was found that the corresponding reed of station B was thrown into sympathetical vibration and *vice versa*. I then requested Mr. Watson to pluck one of the reeds of station C a number of times, while I placed my ear against all the reeds of station B in succession; I could hear from each reed the peculiar tone of the reed plucked at station C, and recognized that the *timbre* of the plucked reed had been reproduced. We then placed a single receiver at station C in circuit with a single receiver at station B, and repeated the experiments. The results were much more marked. Upon plucking the reed at station C, its sound was reproduced by that at station B, and upon plucking the reed at station B, its sound was reproduced by that at station C. When the two reeds employed were in unison with one another, the plucking of one resulted in the visible vibration of the other, the amplitude of vibration often being considerable. No battery was used. Upon placing a battery in the circuit, the same effects were observed and the results were more marked.

[*Adjourned to July* 10, 1879, *at* 10 *A. M.*]

3258

BOSTON, July 10, 1879.

Int. 72. When you used the apparatus without a battery, as stated in your last answer, what generated the electrical impulses which went over the line wire and vibrated the receiver?

Ans. I presumed that the electro-magnets and reeds were weak permanent magnets, on account of the residual magnetism caused by the passage of heavy battery currents through the coils, and that the vibration of the reed, when plucked by the finger, had occasioned a magneto-electric current upon the circuit similar to that which I had intended to produce by the vibration of the reeds of the harp arrangement devised in Canada.

Int. 73. Did you at that time, in June, 1875, attempt to generate these currents by vibrating a regular permanent steel magnet in front of a soft iron core, wound with coils of wire, when there was no battery on the circuit? And if you have the permanent magnet which you used, please produce it.

Ans. I did, upon the 2d of June, 1875, and I produce the permanent magnet then employed. The framework now attached to the magnet was not used at that time. The instrument was arranged in its present condition for the Centennial Exhibition at Philadelphia in 1876.

Int. 74. Did you, subsequently to this experiment of June 2, 1875, construct any apparatus for the purpose of vibrating a reed by the human voice in front of the poles of an electro-magnet? And if so, describe the first apparatus of that kind which you constructed, and state what induced you to construct it. If you have that instrument or any part of it, please produce it.

Ans. I did. The experiments made on the 2d of June, 1875, referred to above, solved the difficulty that had been in my mind since the summer of 1874, in regard to the practical operation of the various instruments I had devised for the reproduction of vocal utterance by electrical means. I had had the idea that magneto-electric currents generated by the vibration of permanent magnets or reeds would be too feeble to produce any useful practical results. But the experiments above described assured me that I had been mistaken in this idea, and I immediately, upon this same

2d of June, 1875, gave instructions to Mr. Watson to have my membrane arrangement constructed. One of the reeds employed in our experiments upon that day was to have been hinged to the pole of its electro-magnet, instead of being clamped, and the free end of the reed was to have been attached to the centre of a stretched membrane, a duplicate was to have been constructed as a receiver. One of the instruments was constructed within the next few days, but instead of hinging the steel reed, as I had intended, Mr. Watson used a thick armature which was pivoted to the pole of its electro-magnet. Portions of this instrument are still in existence, and I now produce them. I produce a duplicate of the original instrument. This duplicate has recently been constructed. The armature now upon the duplicate instrument is thinner than the original armature, and I now produce a duplicate of the original armature. The parts of the original instrument which I have are as follows: The wooden ring and wooden tube upon which the membrane was stretched; the original armature and electro-magnet and the cross bar to which the magnet was attached. The uncovered leg of the magnet, to which the armature was attached, was removed a day or two after the original instrument was constructed and another substituted for it. The pole of the uncovered leg was filed to an edge, and a steel reed was hinged to it by means of a strip of leather. This substitute is the one now attached to the original magnet produced.

Int. 75. Please state whether the uncovered leg of the electro-magnet, now on the duplicate, is constructed like either of those described in your last answer; and if so, which?

Ans. It is constructed like the original first made.

Int. 76. Please look at the wooden ring and stretched membrane now shown you, and state what difference, if any, there is between that and the ring and membrane now on the duplicate.

Ans. The rings are precisely similar. The membrane shown is made of sheepskin, and is somewhat thicker than the goldbeater's skin in the duplicate; and it is fastened to the ring by a wire tied round the groove of the ring instead of a string.

[*The duplicate and the extra armature, and the extra ring and membrane referred to by the witness in the last three answers are put in evidence by the complainants, marked respectively "Exhibit* 31,

3260

Bell Telephone of 1875, *Duplicate*," "*Exhibit* 32, *Bell Telephone of* 1875, *Sheepskin Diaphragm*," *and* "*Exhibit* 33, *Bell Telephone of* 1875, *Heavy Armature*, *W. P. Preble*, *Jr.*, *Examiner*."]

Int. 77. How soon after the 2d of June was the instrument described in your seventy-fourth answer made, when and where was it tried, and with what results?

Ans. I was anxious to try the instrument at once, and could not wait to have the duplicate receiver made; so, immediately upon its construction, I attempted to use it with one of my harmonic receivers. Upon passing a battery current through the coils of the instrument, however, the attraction of the magnet was so great as to tear the heavy armature away from the membrane. Mr. Watson and I made a number of experiments with other membranes in place of the original, and I remember that we were enabled to use the instruments for a practical experiment at least upon one occasion. The stretched membrane arrangement was placed in one of the rooms in the top part of Mr. Williams's building, and an ordinary harmonic reed receiver in the lower workshop. I do not now remember whether any battery was used, but it is my impression that in consequence of the accidents to our membranes we made the experiment without a battery. I distinctly remember shouting into the stretched membrane instrument, while Mr. Watson was down stairs listening with his ear pressed against the reed of the harmonic receiver. I do not remember definitely what the results were, excepting that I was encouraged by them to reconstruct the instrument with a lighter armature. I cannot fix the exact date of the experiment, and only know that it was during the month of June, 1875.

Int. 78. What difficulty did you find from the heavy armature which led you to try a lighter one?

Ans. The armature was so strongly attracted by the electromagnet as to be frequently torn from the membrane, and I presumed that a lighter armature would not only be less attracted, but would also be more easily moved by the membrane and would not be so liable to become detached.

Int. 79. Please look at the letter dated June 28, 1875, which is now shown you and which was one of those which were identified in Mr. Hubbard's deposition, pages 431 and 440. State whether you

wrote and sent it to him at or about its date, and if so read it as part of your answer.

[*Objected to as incompetent.*]

Ans. I did, and I now read it.

"SALEM, MASS., June 28th, 1875.

"DEAR MR. HUBBARD:

"Mr. Hutchins (the organ builder) kindly devoted the whole of this afternoon to the construction of a steel reed for me.

"One of the latest Receiving Instruments was inclosed in a wooden box and had its armature so arranged as to be set in vibration by a current of air passed through the box. The instrument was completed this evening in time for trial. Mr. Hutchins operated the Reed in the little room upstairs (Williams' office) while I observed the effect upon a Receiving Instrument placed in the basement of the building. The sound was so perceptible that I found it unnecessary to place my ear against the instrument. The vibration of the armature could also be seen and felt.

"No battery nor permanent magnet was used.

"I feel sure that a study of Ladd's or Wilde's Magneto-Electric Machine will reveal a means of increasing the intensity of the induced currents. I am told that Prof. Lovering has one of Wilde's Instruments in his possession, so I shall call upon him to-morrow for information concerning it.

"Prof. Pickering has left town for the summer. I propose having the steel reed still further altered to-morrow, so shall probably be at the organ factory (Hutchins, Plaisted & Co., Cambridge Street, near Charles Street), most of the afternoon instead of at Williams'. Shall call in the evening and report progress.

"Yours respectfully,

"A. GRAHAM BELL.

"GARDINER G. HUBBARD,

"Brattle Street, Cambridge.

"P. S. The experiment referred to above was repeated when a single cell of a battery had been placed in the circuit. The amplitude of vibration of the armature downstairs was quite large enough

to work the vibratory circuit-breaker. We were unable to try higher battery power on account of the sticking of the generating armature. When the instrument is altered to-morrow, I shall try higher battery-power and test the resistance through which the current will pass.

"A. G. B."

Int. 80. Did you, before writing that letter, perform the experiments therein described with the results therein stated?

Ans. I did.

Int. 81. The letter speaks of the production of sound when no battery and no permanent magnet was used. What generated the electric current or impulse in that case?

Ans. The vibration of the armature acting upon the residual magnetism of the electro-magnet and armature. The instrument had been previously used in connection with a battery, and the core of the electro-magnet and the armature retained a slight magnetic condition.

Int. 82. During the month of June, 1875, and before the construction and use of the second membrane telephone, did you try any experiments in which electric currents were generated or effected by the vibration of a reed in front of an electro-magnet; and if so, to what extent and for what purpose?

Ans. I was constantly occupied during the month of June, 1875, in experimenting to ascertain the best arrangement of coil, magnet and armature for generating electric currents in the manner indicated.

Int. 83. Please look at the letter now shown you, dated July 1, 1875, which is one of those identified in Mr. Hubbard's deposition, pages 431 and 440, and state whether you wrote it and sent it to Mr. Hubbard at or about its date; and if so, read it as part of your answer.

[*Objected to as incompetent.*]

Ans. I did; and I now read it: —

"SALEM, MASS., July 1st, 1875.

"DEAR MR. HUBBARD:

"The experiment to which I alluded when I saw you last promises to be a grand success. On singing this afternoon in front of a

stretched membrane attached to the armature of an electro-magnet, the varying pitch of the voice was plainly perceptible at the other end of the line, no battery nor permanent magnet being employed. When the vibrations are received upon another stretched membrane in place of a steel spring, it is possible, nay, it is probable, that the 'timbre' of the sound will be perceived. I hope to try the experiment to-morrow afternoon.

"This morning in dipping into a French work upon Telegraphy, I came across a full description of the 'Typo-Télégraphe de M. Bonelli.' I find it to be *identical* with our autograph arrangement, save that five telegraph wires are required instead of one for transmission.

"Bonelli gets over the difficulty of *prepared ink* by setting up his message in type. The brush of wires is passed over the raised surfaces of the letters, securing perfect contact at the proper places.

"I have an engagement to meet Prof. Lovering to-morrow morning at ten o'clock, and shall call upon you before returning to town.

"With kind regards,

"Yours respectfully,

"A. GRAHAM BELL.

"GARDINER G. HUBBARD, Esq.,
"Brattle St., Cambridge."

Int. 84. Did you, at or about the date of that letter, cause to be constructed a second membrane telephone, and if so, when, and have you any of the parts of it?

Ans. The same day I wrote this letter, namely, July 1, 1875, I gave instructions to Mr. Watson to have constructed a second membrane telephone. The instrument was completed a day or two afterwards, and some parts of it are still in existence, and I produce them.

Int. 85. Have you a duplicate recently constructed in accordance with said original second membrane telephone? If so, please produce it.

Ans. I have, and I now produce it.

Int. 86. Please look at the wooden ring and membrane now

shown you, and state wherein it resembles or differs from the wooden ring and membrane now on said duplicate second instrument.

Ans. It differs from it in the membrane being made of sheepskin instead of goldbeater's skin.

Int. 87. Did your second instrument have the armature hinged to the uncovered leg of the magnet, like said duplicate, or did it have it attached with a leather hinge, as described in your seventy-fourth answer?

Ans. I am not sure, but my impression is that it was hinged with a leather hinge.

[*The duplicate instrument and the extra ring and membrane are put in evidence by complainants, marked "Complainants' Exhibit* 34, *Second Bell Telephone of* 1875, *Duplicate," and "Exhibit* 35, *Second Bell Telephone of* 1875, *Sheepskin Membrane, W. P. Preble, Jr., Examiner."*]

Int. 88. What were the membranes made of in your original telephones of June and July, 1875?

Ans. Of goldbeater's skin, used in single and sometimes double thicknesses.

Int. 89. What is the diameter of the inside ring over which the membrane was strained in those two original telephones?

Ans. The first one is about two and three quarters inches in the clear, the second about two and five eighths in the clear.

Int. 90. Did you try these two telephones in July, 1875, — one as transmitter, and one as receiver? and, if so, where and with what results?

Ans. I did. One of the instruments was placed in the room at the top of Mr. Williams's building, and the other in the workshop below. I spoke to one of the instruments while Mr. Watson listened at the other, and *vice versa*. I do not remember with any great distinctness the details of the experiment, but I have a distinct recollection that during the course of the experiments Mr. Watson rushed up to the room at the top of the building where I was and informed me that he could distinctly hear me speaking, although he could not quite make out what I said. He had satisfied himself that the sounds he heard had been produced by the membrane telephone to which he had been listening.

[*Objected to.*]

Int. 91. Was Mr. Williams's workshop a quiet place or a noisy place at the time that you tried these experiments?

Ans. A very noisy place.

Int. 92. What conclusion did you at that time draw from these experiments with regard to the practicability of transmitting articulate speech by instruments having the same mode of operation and principle as these stretched membrane instruments that you had so experimented with?

[*Objected to.*]

Ans. I considered that the experiments demonstrated the practicability of transmitting articulate speech by instruments having the same mode of operation and principle as these stretched membrane instruments, and that it was only necessary to make further experiments to ascertain the best arrangement of the parts.

Int. 93. Please look at the letter now shown you, which is addressed to Mr. Hubbard, dated July 7, 1875, and is one of those identified upon pages 431 and 440 of the record. State whether you wrote and sent it to him at or about the time of its date, and if so, read it as part of your answer, omitting any parts that relate to family matters.

[*Objected to as incompetent.*]

Ans. I did, and I now read it.

"SALEM, MASS., Wednesday, July 7th, 1875.

"DEAR MR. HUBBARD,

"I forgot to mention this evening the gratifying results obtained with the steel reed.

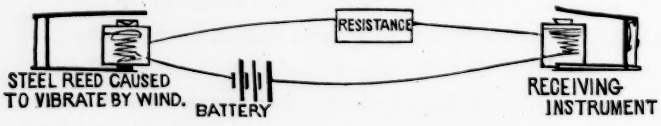

"When three cells of a battery were introduced into the circuit (as shown in the figure), the armature of the Receiving Instrument vibrated with considerable amplitude. When a damper was adjusted for it to strike against, the sound could be heard at a distance from the instrument.

3266

"The helix at Transmitting end had a resistance of about two ohms, and yet the vibration of the armature of the Receiving Instrument could be detected when a resistance of 100 ohms was introduced into the circuit. This seems to me to indicate more power than can possibly be due to magneto-electric currents, generated by the vibration of the reed.

"May not a pulsatory action be induced in *the voltaic current itself* by the motion of the reed? I can imagine the current alternately weakened and strengthened according to the distance of the armature from the pole underneath.

"In this case the pulsations would certainly be available for our purpose, by merely increasing the battery power sufficiently to overcome the resistance of the Line. Magneto-electric currents are, however, evidently present, for a sound is perceptible at the receiving end when the battery is omitted altogether.

"I think also that the effects are in some way dependent upon the peculiar form of electro-magnet employed. I hope to get some light on the subject from Moncel. He devotes several pages to the discussion of peculiarities observed in the one-legged or 'lame' magnet (boiteux), shown in his work as follows:—

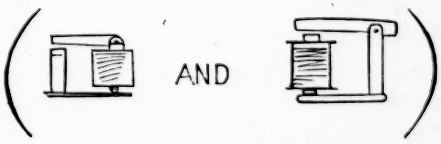

"He says, 'Ce genre d'électro-aimant, que j'ai beaucoup étudié et le premier employé dans les applications électriques, a beaucoup d'avantages dont nous parlerons plus tard, et *une force beaucoup plus considérable qu'on ne semblerait le croire à premiere vue.*' . . .

"With kind regards, yours Respectfully,

"A. GRAHAM BELL.

"GARDINER G. HUBBARD, Esq.,
"Brattle Street, Cambridge."

Int. 94. Please look at the letter now shown you, addressed to Mr. Hubbard, and dated Aug. 14, 1875, which is one of those identified on pages 431 and 440 of the record. State whether you wrote

3267

and sent it to him at or about the time of its date; and if so, read it as part of your answer.

[*Objected to as incompetent.*]

Ans. I did, and I now read it

"SALEM, MASS., August 14th, 1875.

"DEAR MR. HUBBARD:

"On glancing back over the line of electrical experiments, I recognize that the discovery of the magneto-electric current generated by the vibration of the armature of an electro-magnet in front of one of the poles is the most important point yet reached. I believe that it is the key to still greater things.

"The effects produced, though slight in themselves, appear to me so great in proportion to their cause that I feel sure that the future will discover means of utilizing currents obtained in this way on actual telegraph lines.

"So important does it seem to me to protect the idea that I think some steps should be taken immediately towards obtaining a Caveat or Patent for the use of a Magneto-Electric Current, whether obtained in the way stated above, (by the vibration of permanent magnets in front of electro-magnets,) or in any other way. I should wish to protect it specially as a means of transmitting simultaneously musical notes differing in *intensity* as well as in pitch.

"I can see clearly that the magneto-electric current will not only permit of the actual copying of *spoken utterance*, but of the simultaneous transmission of *any* number of musical notes (hence messages) without confusion.

"The more I think of it the more I see that the method of making and breaking contact so many times per second, is only the *first stage* in the development of the idea.

"When we can create a pulsatory action of the current which is the *exact equivalent* of the aerial impulses, we shall certainly obtain exactly similar results. *Any number of sounds* can travel through the same air without confusion, and any number should pass along the same wire.

"It should even be possible for a number of spoken messages to traverse the same circuit simultaneously, for an attentive ear can

distinguish one voice from another, although a number are speaking together.

"Don't you think it would be well to take out a *caveat* for the use of the magneto-electric current?

"In its present undeveloped state, it might be unwise to let Gray know anything about it, unless indeed we could secure the *principle* of it in a patent.

"Yours respectfully,

"A. GRAHAM BELL.

"GARDINER G. HUBBARD, Esq.,
"Cambridge."

Int. 95. In that letter you say, "The more I think of it the more I see that the method of making and breaking contact so many times per second is only the first stage in the development of the idea." To which of your inventions, or to what class of apparatus, does that clause refer?

Ans. It refers to my method of harmonic multiple telegraphy, in which Mr. Hubbard was pecuniarily interested.

Int. 96. Have you within the past fortnight attempted to transmit articulate speed with the duplicate telephones, Exhibits 31, 32, 33, 34 and 35? And, if so, state when and where and with what results. If you used more than one membrane or more than one armature with each instrument, state what you used each time.

Ans. Last Saturday, July 5, I made an experiment with the duplicate telephones, Exhibits 31 and 34, at No. 40 State Street, in the two rooms and with the arrangement of circuits described in Mr. Cross's third answer, page 383. The rings with the sheepskin membranes were used in the instruments and heavy armatures similar to that shown in Exhibit 33. I believe the exhibit is one of the armatures used. Mr. Watson and I were enabled to carry on a conversation by means of the membrane telephones. On Monday, the 7th of July, the same instruments were taken to Mr. Williams's workshop and placed under as nearly as possible the same conditions as the original membrane telephones used in July, 1875. Mr. Watson and I attempted to carry on a conversation by means of the instruments, but were unable to do so. I could hear sounds proceeding from the membrane telephone at my

3269

ear while Mr. Watson was speaking at the other end of the circuit, but I could not make out what he said. We could not find a quiet place in Mr. Williams's building to repeat the experiment under favorable conditions, and so carried the instruments to 40 State Street, and arranged them as we had done on Saturday, the 5th. We then found that we could carry on conversation by means of them. During the course of our experiment at 40 State Street, on Monday, the 7th, a fire alarm was struck, and while the bells were ringing, and during the intervals between the strokes, we were unable to carry on conversation. The results obtained during the ringing of the fire bell were similar to those obtained just before, at Mr. Williams's workshop. The battery used at 40 State Street consisted of three small carbon and zinc cells with bichromate of potassium solution. The battery used at Mr. Williams's was of the same kind, but consisted of two large cells. Mr. Watson, Mr. Storrow, Mr. Berliner, Mr. J. B. Henck, Jr., and Dr. Clarence J. Blake were present at the experiments at Mr. Williams's workshop, and at No. 40 State Street, on Monday, the 7th inst. The sheepskin membranes and heavy armatures alone were used on the 5th and 7th instants. On Wednesday, the 9th inst., the goldbeater's skin membranes and light armatures were used in an experiment at No. 40 State Street. The instruments were then in the same condition in which they are now, and the arrangement of circuit was the same as has been already described in Mr. Cross's deposition. Mr. Watson and I spoke to one another by means of the instruments. I could hear the sound of Mr. Watson's voice very plainly, and could make out a number of words. The articulation was not so distinct as with the sheepskin membranes. The articulation of the instruments when first used was pretty distinct, but the membranes soon became damp by the action of the breath, and the articulation was then much less distinct. When the distinctness was least, however, I could still make out a word here and there of what Mr. Watson said at the other end of the circuit.

Int. 97. In these recent experiments which you have just described, did you hold the instrument so that the armature was substantially perpendicular with its hinged end upwards, or in what position did you hold it?

3270

Ans. I held it in the position indicated and in every other position I could think of, and observed that the position in which the instrument was held did not affect the audible results obtained.

Int. 98. Did you go to Canada for a vacation in the summer of 1875? If so, when did you go, and when did you return?

Ans. I did. I went to Canada in the early part of September, and returned to Boston about the first of October. When I speak of returning to Boston in this and other answers, I mean to the neighborhood of Boston where my professional work was, though I lived out of town.

Int. 99. While in Canada in that vacation, did you apply to any one to assist you in obtaining patents in England, for any inventions you had made relating to the use of electricity; and if so, whom did you apply to?

Ans. I did. I applied to the Hon. George Brown in Toronto, on or about the twenty-eighth day of September.

Int. 100. Please look at the letter now shown you, addressed to Mr. Hubbard, dated Sept. 28, 1875, and which was identified in Mr. Hubbard's deposition, pages 431 and 440, and state whether you wrote and sent it to him at or about its date, and if so, read such parts of it as relate to your electrical inventions.

[*Objected to as incompetent.*]

Ans. I did, and I now read from it as follows: —

"IMPERIAL BANK OF CANADA, TORONTO, Sept. 28th, 1875.

"DEAR MR. HUBBARD:

"You must not think that I have been neglecting telegraphy during my visit to Canada. I brought a couple of instruments with me, and have discovered a method of annihilating the spark that has caused me so much trouble, without the necessity of using a condenser. I have felt very anxious in the matter of foreign patents, and, as I have not heard anything from the friends on the other side to whom I applied for assistance in the matter, I thought I would see friends in Toronto and Montreal. My idea was to get a letter of introduction to Sir Hugh Allan, and seek his aid in the matter. On consulting my friend, Hon. George Brown (Ex-Premier of Canada), he became much interested, and offers, if the scheme

3271

seems likely to be a good thing, either to take up the matter himself or get two or three gentlemen to do so. I have arranged to write particulars at once to him in confidence, and if we come to an arrangement they will telegraph to England to set matters afoot there and on the continent at once. I must be in Belleville tomorrow, but shall not delay in Montreal to see Sir Hugh. . . .

"I shall try to see you as soon as possible. I cannot reach Boston before Friday or Saturday.

"With kind regards,

"Yours respectfully,

"A. GRAHAM BELL."

Int. 101. When did you begin to prepare the specification for your patent No. 174,465, of March 7, 1876?

Ans. During the month of September, 1875, in Canada, and I continued it in Boston when I returned, during the early part of October.

Int. 102. Have you any of the sheets on which your rough draft of that specification was made in October, 1875? And if so, please produce them.

Ans. I have, and I now produce them.

Int. 103. Please read from them as part of your answer the passages which I will point out to you on the sheets which I will ask the examiner to number and mark for identification.

Ans. I read from Sheet 1: —

"My present invention consists in the employment of a vibratory or undulatory current of electricity in place of a merely intermittent one, and of a method of and apparatus for producing electrical undulations upon the line wire."

And the sentence ends there, and the next line consists of the word "Phono-Telegraphy." The foregoing is written in pencil.

On the opposite side of the same sheet the page begins: —

"by inducing undulations in (upon) a continuous voltaic circuit by the motion of bodies capable of affecting the current, such as the armature of an electro-magnet, a permanent magnet or a body through which a continuous current of electricity is passed."

This is accompanied by a drawing substantially like A, Figure 5 of said patent. This paragraph and the drawing are in ink.

I read from Sheet 2 : —

"It has long been known that when a permanent magnet is caused to approach the pole of an electro-magnet, a current of electricity is induced in the coils of the latter, and that when it is made to recede a current of electricity of opposite polarity to the first appears upon the wire. When, therefore, a permanent magnet is caused to vibrate in front of the pole of an electro-magnet, an undulatory current of electricity is induced in the coils of the electro-magnet, the undulations of which correspond in number per second to the vibrations of the magnet — in polarity to the direction of motion of the permanent magnet — and in intensity to the amplitude of the vibration of the permanent magnet."

The portion I have just read is written in pencil.

On the same side of the same sheet there is also written in pencil the following : —

"CLAIMS.

"1. In a system of telegraphy in which the receiver is set in vibration by the action of the electrical current, the employment of vibratory or undulatory currents of electricity as distinct from merely intermittent currents.

"2. The method of inducing (impressing) undulations in a continuous voltaic current by the vibration or motion of bodies capable of affecting the current, whether such bodies be permanent magnets, the armatures of electro-magnets, or bodies through which a continuous current of electricity is passing.

"3. The Phono-Telegraph whereby two or more vocal or other sounds, differing in pitch, loudness and *timbre*, can be transmitted singly or simultaneously along a single wire, by causing electrical undulations upon the wire, similar in *form* to the aërial vibrations accompanying said vocal or other sounds."

From Sheet 3 I read the following in pencil : —

"4. The method of producing an undulatory current by the vibration of a body through which a continuous current of elect. is passed . . . ."

On the other side of the same sheet, in continuation of what I have just read, I find also in pencil the following : —

3273

"6. The method of and apparatus for transmitting simultaneously sounds differing in 'timbre' as well as in pitch and in loudness.

"7. The method of and apparatus for transmitting vocal utterance telegraphically, substantially as herein set forth."

On Sheet 2 I find written in ink the following: —

"In illustration of the method of creating a vibrat. current of elect., I shall show and describe one form of apparatus designed to produce undulations in a continuous voltaic current. But I wish to state here that the same effect may be produced in many other ways, all that is necessary being to influence the current by the vibration or motion of bodies capable of affecting the current."

On Sheet 4 I find the following, written in ink: —

"CLAIMS.

"1. In a system of telegraphy in which the receiver is set in vibration by the passage of the electrical current, the employment of vibratory or undulatory currents of electricity as distinct from merely intermittent currents.

"2. The method of impressing (inducing) undulations upon a continuous voltaic current by the vibration or motion of bodies capable of affecting the current, whether such bodies be permanent magnets, armatures of electro-magnets or bodies through which a continuous current of electricity is passing.

"3. The Phono-Telegraph whereby the exact pitch, loudness and *timbre* of vocal or other sounds can be transmitted telegraphically, by causing the body, by whose motion undulations are induced upon the line wire, to copy exactly the aërial vibrations accompanying said vocal or other sounds, and hence to induce upon the line wire, electrical undulations similar in *form* to those occurring in the air."

On the other side of the same sheet the page begins with the following, written in pencil: —

"In another application for letters patent I have described a method of and apparatus for transmitting two or more telegraphic — "

Int. 104. On that side of Sheet 4 from which you have just read something written in pencil, I find some writing in ink, the last few words of which are written over a few words of the pen-

cil writing which you have just read. What is that which is written in ink?

Ans. It is a portion of the rough copy of a letter that I wrote to the secretary of the Philadelphia Institution for the Deaf and Dumb, relating to the proposed introduction of my father's system of visible speech into that institution, and the exhibition of that system at the Centennial Exhibition.

Int. 105. Please state when you wrote the said letter of which said sheet contains the rough draft, and state also whether you have any means of fixing the date.

Ans. I wrote the letter during the latter part of October, 1875, or the commencement of November, 1875. I can fix the date as earlier than the 4th of November, by a letter which I wrote on the 13th of November, 1875, to Mr. James J. Barclay, Secretary of the Institution for Deaf-Mutes, Philadelphia, in which the following occurs: —

"*My Dear Sir*, — Many thanks for your kind note of the 4th inst. I am sorry that the institution cannot consider my terms," etc.

The letter of the 4th inst., to which I refer, was in answer to the letter I wrote to Mr. Barclay, a portion of the rough copy of which appears upon Sheet 4.

Int. 106. The reverse side of Sheet 3 has some writing in ink which does not refer to electricity. Please state what it is.

Ans. It is a portion of a rough copy of the same letter to the secretary of the Philadelphia Institution, to which I have referred, as written before the 4th of November, 1875.

Int. 107. The reverse side of Sheet 1, from which you have read something written in ink, contains something written in pencil which does not appear to relate to electricity. Please state what it is.

Ans: It is a portion of the rough copy of a letter giving the supposititious history of a "Book of Ornamental Art."

Int. 108. Have you that letter, and when was it written?

Ans. I have. It was written and is dated Oct. 26, 1875.

Int. 109. How many sheets did you produce in answer to my one hundred and second question?

Ans. Seven.

3375

[*The seven sheets are marked for identification.*]

Int. 110. Are these all the original rough drafts made in preparing that specification which you now have?

Ans. They are.

Int. 111. Are they all that you made?

Ans. By no means.

Int. 112. Have you made search for the others, and have you been able to find them?

Ans. I have made search, but have been unable to find any others than those produced.

[*Adjourned to July* 11, 1879, *at* 10 *A. M.*]

BOSTON, July 11, 1879.

Int. 113. Please state whether the rough drafts for your specification, or the seven sheets of them which you produced yesterday, read consecutively, or in what condition they are as to roughness, rewriting, etc.

Ans. They do not read successively, and are merely fragmentary remains of my first attempts to put into correct language the ideas embodied in my specification. Some passages are written in pencil, others in ink, and many of them are so disfigured by the corrections and re-corrections that I made in the language at the time, that it is difficult in some cases now to read them.

Int. 114. Was a specification prepared from these drafts for Mr. G. G. Hubbard to take to Washington and have examined by Mr. Pollok, your patent solicitor?

Ans. It was.

Int. 115. Did you learn from Mr. Hubbard at any time that Mr. Pollok had examined this specification with him, and found it satisfactory, and if so, when did you learn this? If you have any means of fixing the date with precision, please state what means you have.

Ans. I heard from Mr. Hubbard to this effect upon the 18th of January, 1876. I fix this date by reference to a letter that I wrote to Mr. Hubbard's daughter on the 18th of January, 1876, in which the following passage occurs: —

"I received a nice letter from your father this morning, in which he says how well pleased he is with the new specification, and that

it promises to be of great value if I *prosecute my researches diligently*, if not, others may supplant me. He says, 'I have been over your specification with Mr. Pollok. He is very much pleased with it, and says he does not think it will require any alteration.'"

Int. 116. Have you in your possession the letter from Mr. Hubbard to you, referred to in your last answer?

Ans. I have not.

Int. 117. Have you made careful search for it?

Ans. I have, but have been unable to find it.

Int. 118. What day of the week was the 18th of January, 1876?

Ans. It appears by the calendar that it was Tuesday.

Int. 119. Please state when, if ever, you received from Mr. Pollok's office a fair copy of the specifications to be signed and sworn to; and if you have any means of fixing the date, please produce it.

Ans. I received a fair copy of the specification from Mr. Pollok's office either on the nineteenth or twentieth day of January, 1876, and I took oath to it in Boston on the twentieth day of January, 1876. I fix the date of receiving it by a memorandum which has been given to me, which I am informed and believe is a press copy of Mr. Pollok's letter to me accompanying the specification. It is as follows: —

"JAN'Y 18, 1876.

"MR. A. GRAHAM BELL:

"*Dear Sir*, — Herewith find applic., papers, etc., for your new improvements in telegraphy. We have left blank for title of invention in the Oath, which you can fill in.

"Please execute the papers as indicated in pencil, and return them to me.

"Very truly yrs."

Int. 120. Have you got the original of the letter just read?

Ans. I have not.

Int. 121. Do you know where it is?

Ans. I do not.

Int. 122. In whose handwriting was the fair copy of the specification which was sent you from Washington, as you stated?

Ans. I do not know. It was in a strange handwriting. I presumed it was written by some of Mr. Pollok's clerks.

Int. 123. Please look at the certified copy of the specification now shown you, and state when and where the *jurat* is dated.

Ans. Suffolk County, State of Massachusetts, the 20th of January, 1876.

Int. 124. It appears from this certified copy that said application was filed in the Patent Office Feb. 14, 1876. Why was it not filed sooner?

Ans. I had made arrangements to have the specification filed simultaneously in England and the United States, and delayed making the application in the United States Patent Office in the expectation of receiving a cablegram from England informing me when to file it.

[*Complainants put in evidence a certified copy of file wrapper and contents of Bell patent of March* 7, 1876, *marked "Complainants' Exhibit* 36, *Bell's Application of* 1876, *W. P. Preble, Jr., Examiner."*]

Int. 125. Please look at the paper now shown you. State who made it.

Ans. I did.

Int. 126. When and where and for what purpose?

Ans. I made it at the Queen's Hotel, Toronto, on the 28th day of December, 1875, for the information of the Hon. George Brown.

Int. 127. What occasion had you to give him information on the matters shown in that paper?

Ans. I expected to conclude arrangements for having him take out patents in England for me, and made this drawing to illustrate certain of my inventions.

Int. 128. Is that the same Mr. George Brown spoken of in your letter to Mr. Hubbard of Sept. 28, 1875, which was read as part of your one hundredth answer?

Ans. It is.

Int. 129. State generally what inventions or what apparatus that paper shows.

Ans. The invention and apparatus described in my United States patent, dated March 7, 1876.

Int. 130. There appears to be a memorandum on the back of it not in your handwriting: who wrote that?

Ans. The Mr. George Brown referred to.

3278

Int. 131. In whose possession did you leave it after you made it, and when did you next see it?

Ans. I left it in the possession of the Hon. George Brown, in Toronto, on the 29th day of December, 1875, and I next saw it in Toronto on the 12th of November, 1878, and requested Mr. Brown to intrust it to Mr. Thomas A. Watson, who brought it on to Boston.

[*Complainants put in evidence the paper referred to, and it is marked "Complainants' Exhibit* 37, *Bell's Toronto Drawing, W. P. Preble, Jr., Examiner."*

Counsel for defendant objects to the memorandum on the back of the drawing as evidence of any fact stated in it.]

Int. 132. After the grant of your patent, March 7, 1876, did you or did you not continue study or experiments on the subject of transmitting articulate speech or other sounds, and if so, for what purpose?

Ans. I did. For the purpose of introducing my invention into public use.

Int. 133. Did you exhibit any of your electrical inventions at the Centennial Exhibition at Philadelphia, and if so, what apparatus did you carry there for that purpose?

Ans. I did. I exhibited my method of harmonic multiple telegraphy, and my method of transmitting articulate speech electrically. The apparatus exhibited consisted of a telephonic organ, two current interrupters and two vibratory reed receivers, having attached to them what I termed vibratory circuit breakers for working Morse instruments by my musical telegraphic signals. I also had the permanent horseshoe magnet, which has already been produced, arranged over a single pole electro-magnet. Four forms of speaking telephones which were briefly as follows: two membrane telephones, which could be used either as transmitters or receivers. A single pole electro-magnet was used for one and a double pole electro-magnet for the other. The armature of each electro-magnet consisted of a small piece of steel spring glued to the centre of the membrane. A third form of speaking telephone was shown, intended to be used only as a receiving instrument. The electro-magnet was inclosed in a hollow box of iron, and a lid of iron or steel, I forget

which, was used as an armature. This lid formed a thin circular metallic diaphragm, resting by its edge upon the rim of the iron box, its central portion not quite touching the pole of the electro-magnet underneath. The instrument was intended to be arranged upon a circuit with either of the membrane telephones referred to before. Upon placing the ear against the lid of the box, the articulation of the person speaking into the membrane telephone was audible, proceeding from the lid. A fourth form of speaking telephone was shown, intended to be used only as a transmitter. It consisted of a metallic ring supported horizontally, carrying a stretched membrane to the centre of which was fastened either a platinum wire or a thin rod of carbon, I forget which, dipping into a little cup containing acidulated water. In addition to these instruments, a form of apparatus was shown for studying optically the peculiarities of the electrical current produced by my telephones. It consisted of one of Koenig's manometric capsules, to the membrane of which was glued a thin piece of steel, which formed the armature of an electro-magnet.

Int. 134. Did you operate before the judges of the Centennial Exhibition any of your apparatus for the transmission of articulate speech which you had on exhibition there, and if so what instruments did you so operate, when and with what results?

Ans. I did. I exhibited in operation the two membrane telephones with electro-magnets referred to in my last answer, and the iron box receiver, to the judges of that section, on Sunday, the twenty-fifth day of June, 1876. The result was that the articulation of the person speaking into the membrane telephone was audibly reproduced by the iron box receiver, and the person who placed his ear against the lid of the instrument heard and understood what was said at the other end of the circuit.

Int. 135. Name some of the persons who were present at that exhibition.

Ans. Sir William Thomson, the Emperor of Brazil, Professor Hilgard, Professor James C. Watson, Dr. Draper, Dr. Koenig, Mr. Elisha Gray, Professor Sterry Hunt, Mr. William H. Hubbard, and many others whose names I do not now recall.

Int. 136. Did you receive any letter written on that day by any

3280

gentleman present at that exhibition, referring to the results obtained? and if so please read it as part of your answer.

[*Objected to as incompetent.*]

Ans. I did, and now read it. It is from Professor Sterry Hunt: —

"CONTINENTAL HOTEL, PHILA., June 25, '76.

"DEAR MR. BELL:

"I am informed that you leave to-night for Boston, so I take this way of congratulating you on your success to-day. I returned to my hotel with Sir Wm. Thomson, and dined with him. He speaks with much enthusiasm of your achievement. What yesterday he would have declared impossible he has to-day seen realized, and he declares it the most wonderful thing he has seen in America. You speak of it as an embryo invention, but to him it seems already complete; and he declares that, before long, friends will whisper their secrets over the electric wire.

"Your undulating current he declares a great and happy conception.

"All this he discussed partly with Dr. Bache and more at length with Sir Redmond Barry and Sir John Hawkshaw. Sir William leaves here on Friday for Montreal, and will visit Boston for a day or two before sailing, which will be from New York, July 19.

"Thinking you would be glad to hear the judgment of one so eminent, I have written you this, and I am, my dear Mr. Bell,

"Always truly yours,

"T. STERRY HUNT.

"P. S. — Do you know anything of Brücher's system of visible speech, of which one of the Austrian judges spoke to-day? It seems very like your father's.

"GRAHAM BELL, Esq."

Int. 137. How soon after that did you leave Philadelphia?

Ans. I left Philadelphia the same night.

Int. 138. Did you receive a visit from Mr. Gray in Philadelphia, and if so, when and where was it, and in whose presence?

Ans. I did. Mr. Gray visited me at my hotel on that Sunday afternoon or evening, after our exhibitions, and just before I left for

3281

Boston. Mr. William Hubbard was visiting me at the same time, and was present when Mr. Gray came.

Int. 139. How sure are you that it was after your exhibition, and not the day before? And state what, if anything, confirms your recollection on that point.

Ans. I remember that Mr. William Hubbard was present at the time of Mr. Gray's call, and that Mr. Hubbard did not reach Philadelphia until about twelve o'clock at night the evening before. A telegram had been sent to Mr. Hubbard, in Boston, requesting him to come to Philadelphia to assist me in operating my apparatus on Sunday. He arrived, as stated, just in time to take part in the experiments, and I left for Boston on Sunday night. I am therefore absolutely sure that Mr. Gray's visit to me was on Sunday, June 25, 1876, and I remember that it was after our respective exhibitions and before I left for Boston.

Int. 140. Was the visit from Mr. Gray a friendly and pleasant one, or not?

Ans. It was a very friendly and pleasant visit.

Int. 141. Did Mr. Gray at that visit say to you that he had invented a speaking telephone?

Ans. I have no recollection of such a remark, and I am quite sure that he did not; for, under the circumstances, I should have been certain to have remembered it.

Int. 142. What receiver did you design to use with the liquid transmitter you say you exhibited at Philadelphia?

Ans. I had intended to use the iron box receiver with the liquid transmitter at the Centennial Exhibition, but I had also been in the habit of using the membrane telephones with electro-magnets for that purpose.

Int. 143. Had you or had you not transmitted articulate speech by means of that liquid transmitter before sending it to Philadelphia?

Ans. I had.

Int. 144. Please produce the three membrane telephones and the iron box telephone which you had at Philadelphia.

Ans. I now produce them. The membranes of all the membrane telephones are broken, and the armature of one magneto instrument is gone. The mouthpiece of the double-pole magnet telephone is

3282

also injured. The mouthpiece of the liquid transmitter has been disfigured by being used for subsequent experiments. The platinum wire or carbon rod of the liquid transmitter, with its connecting wire, is missing. The lid or diaphragm of the iron box receiver is wanting, and the coil in this instrument is not the one used at the Centennial Exhibition.

Int. 145. What is the size of the diaphragm in each of these four instruments?

Ans. In the three membrane instruments the diameter of the membrane was two and three quarter inches. In the iron box receiver the diameter of the metallic diaphragm was one inch and a half.

[*Complainants put in evidence the telephones referred to, and they are marked respectively "Complainants' Exhibit* 38, *Bell's Single Pole Centennial Membrane Telephone"; "Complainants' Exhibit* 39, *Bell's Double Pole Centennial Membrane Telephone"; "Complainants' Exhibit* 40, *Bell Centennial Iron Box Magnet Receiver"; "Complainants' Exhibit* 41, *Bell Centennial Liquid Transmitter," W. P. Preble, Jr., Examiner.*]

Int. 146. Please look at the letter now shown you, dated July 2, 1876; state to whom it is written, and read it as part of your answer, omitting the personal and family matters. State when you wrote and sent it.

[*Objected to as incompetent.*]

Ans. It is a letter written by me to Mr. William H. Hubbard, on the 2d of July, 1876, although by inadvertence it was dated July 2, 1867. I sent it on or about the 2d of July, 1876. I now read it:—

"CAMBRIDGE, MASS., July 2d, 1867.

"MY DEAR WILLIE,—

. . . "Willie Winlock and Bert Eustace went into Boston to help me on Thursday in case it was decided to work my instruments between Boston and Philadelphia. They were to sing for me. . . .

"Having completed my list of messages, I must really now speak of my telegraphic instruments. I can't tell you how glad I was to receive your telegram about your exhibit before Sir William. Mrs. Hubbard and *all the family* feel very proud of you for being able to

3283

exhibit so successfully my electrical apparatus. I had no idea that you would have to remove the apparatus to the judges' hall. Poor fellow, what a time you must have had! I really do feel very proud of you that you should have made everything go smoothly. I am very anxious about Saturday. What should I have done without you or rather what should I do now without you? I am afraid you must think me very ungrateful for not having written, but the fact is, that in preparing for transmitting sounds to Philadelphia from here, I made such a startling discovery that I have been unable to do anything else since but experiment. In order to attempt the transmission of speech to Philadelphia, it was necessary to have a telephone constructed the magnet of which should have a resistance equivalent to a considerable portion of the total resistance of the telegraph line between here and Philadelphia. The resistance of the line is over 5,000 ohms. Now I have had two magnets made, the coils of which offer a resistance of 3,250 ohms both together. It would require a battery of many cells in order to operate a Morse sounder through such a resistance. It is as great a resistance as 325 miles of well insulated telegraph wire! My discovery was that I could work my apparatus with *one cell of battery* through this resistance. I am sure by substituting a *permanent magnet* for the pole of the electro-magnet, I could work it *without a battery at all*. . . .

"With love and best wishes,

"Yours sincerely,

"A. GRAHAM BELL."

"MR. WILLIAM HUBBARD,
"East Gall., M. B.,
"Exhibition Building, Philad."

"P. S. — Should I send on apparatus to Philadelphia and you make the connections, simply connect the instr. with the line wire and the earth like this, —

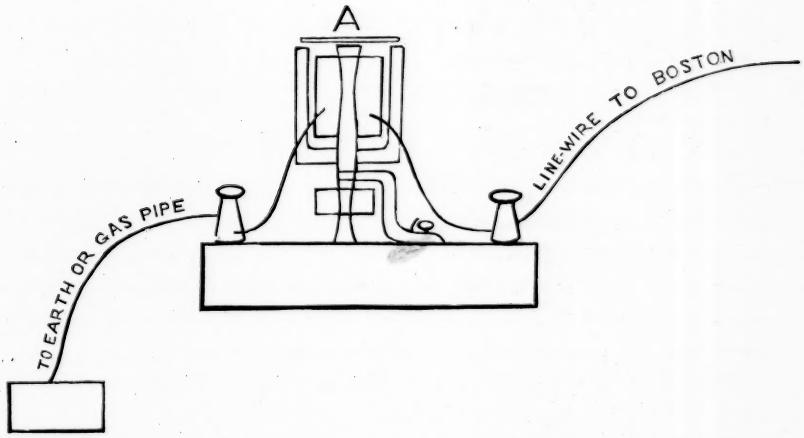

A. G. B.

"You can increase musical sounds by resting bridge of violin against A."

Int. 147. In this letter you say, "I am sure by substituting a permanent magnet for the pole of the electro-magnet I could work it without a battery at all." State when you first thought of transmitting sounds without a battery.

[*Objected to as incompetent.*]

Ans. My original idea in the summer of 1874 was to transmit sounds by means of magneto-electric currents without a battery, and from the time of the first conception of the speaking telephone I had the belief that the apparatus could be operated by substituting a permanent magnet for the soft iron core of the electro-magnet.

Int. 148. Then why did you use a battery with your speaking telephone?

Ans. Because the effects obtained were much more powerful with a battery than without, and because I had the idea that in operating the instruments through any considerable resistance, as upon a real telegraph line, the battery would produce the most practically useful results.

Int. 149. Have you a memorandum of experiments made by you on the transmission of sounds June 30, 1876? If so, please produce it and state when you made the memorandum.

[*Objected to as incompetent.*]

Ans. I have. The memorandum was made on the 30th of June, 1876, and I now produce it.

Int. 150. State whether you made the experiment on that day as there described.

Ans. I did.

Int. 151. Answer the same questions as to experiments made July 3, 1876, on the same subject.

[*Objected to as incompetent.*]

Ans. I made the memorandum of the experiments referred to, upon the 3d of July, 1876, and the experiments related were made upon that day, and I now produce the memorandum.

Int. 152. Answer the same questions as to experiments made July 6, 1876, on the same subject.

[*Objected to as incompetent.*]

Ans. I made the memorandum of the experiments referred to upon the 9th of July, 1876. The experiments themselves were made on Thursday, the 6th of July, and I produce the memorandum.

Int. 153. What is the Figure 2, page 17, referred to in the first line of the experiments of July 6?

Ans. It is Figure 2 under date of July 3, 1876.

Int. 154. Please answer the same questions as to experiments of July 7, 1876, which are numbered 5, 6 and 7, in the same note book referred to in your last answers.

[*Objected to as incompetent.*]

Ans. The notes of these experiments were written by me upon the 9th of July, 1876, and the experiments themselves were made on the evening of Friday, the 7th of July, and I produce the notes.

Int. 155. Did you, during the summer of 1876, have made for you a two-pole permanent magnet with a coil of wire wound round each leg, after the manner of a horseshoe electro-magnet? If so, who made it, and when was it made?

Ans. I did. It was made at Mr. Williams's workshop, in July, 1876, on or before the fifteenth day of July, 1876.

Int. 156. Please read from Mr. Williams's book the charge for making it.

Ans. "JULY 15, 1876.

"A. G. BELL & Co., Dr.,

"To making mag. $3\frac{3}{8}$ in. long of steel, coils of 38 D. C. Wire,

"1740 ohms. $14.75."

Int. 157. Have you a memorandum of experiments made July 11, 1876? And if so, please produce the memorandum. State when and by whom it was made, and whether on said day you tried the experiments therein described.

[*Objected to as incompetent.*]

Ans. I have. The memorandum was made by me upon the 12th of July, 1876, and the experiments narrated were made the day before, and I now produce the memorandum.

Int. 158. Have you a memorandum made on or about July 12, 1876, of modifications of the speaking telephone which you devised on or before that day? If so, state when you made that memorandum, and produce it.

[*Objected to as incompetent.*]

Ans. I have. I made the memorandum upon the twelfth day of July, 1876, and I now produce it.

Int. 159. Have you a memorandum of experiments made between Oct. 2 and 7, 1876? If so, state by whom the memorandum was made, and when, and produce it.

[*Objected to as incompetent.*]

Ans. I have. I made the memorandum on the 14th of October, 1876, and I now produce it.

Int. 160. Have you a memorandum as to certain experiments made by you between Oct. 12 and Nov. 12? And if so, state when and who made them, and produce them.

[*Objected to as incompetent.*]

Ans. I have. I made the memorandum on the 12th of November, 1876, and I now produce it.

Int. 161. Did you on the dates stated in these several memoranda make the experiments therein described as having been made?

Ans. I did.

[*Copies of all the memoranda above referred to are introduced by the complainants, and marked "Complainants' Exhibit 42, Bell's*

3287

Memoranda of Experiments of 1876, *W. P. Preble, Jr., Examiner.*"]

Int. 162. Please state when you first used the permanent magnet made for you by Mr. Williams on or before July 15, 1876.

Ans. I used it immediately upon its construction.

Int. 163. Please produce that magnet.

Ans. I now produce it.

[*Complainants put in evidence the permanent magnet referred to, and it is marked* " *Complainants' Exhibit* 43, *Bell's Permanent Magnet of* 1876, *W. P. Preble, Jr., Examiner.*"]

Int. 164. Did you, on or about October or November, 1876, work a telephone between Boston and Cambridge without a battery and by means of a permanent magnet? And if you have any memorandum of such an exhibition, please state what it is, and read it.

[*Objected to as incompetent.*]

Ans. I did, and I have a memorandum of such an exhibition. It is contained in a letter written by me on the 12th of November, 1876, and is as follows: —

"18 Beacon Street, Boston, Mass.,
Sunday, Nov. 12th, 1876.

" . . . The telephone once more comes out triumphant from a severe test. Prof. Rogers, and Mr. Waldo of the Observatory and I carried on conversations with Mr. Watson through the telegraph line between Boston and Cambridge with perfect ease. The articulation was perfectly distinct, and even a whisper was intelligible. The length of the circuit was about seven miles, but as there were no less than six electro-magnets upon the line, the resistance of the line was fully equivalent to fifteen or sixteen miles. We cut out the battery and could distinctly hear the tones of Mr. Watson's voice singing one of Moody & Sankey's hymns, without any battery at all. This evening we have made another discovery of a very important kind, which will lead to the reduction of the battery required or to the omission of batteries altogether."

Int. 165. If you have any memorandum or letter which will enable you to fix the date when you made the Toronto drawing,

Exhibit 37, referred to in your one hundred and twenty-sixth answer, please read from it the portions which refer to that drawing.

Ans. I have such a letter, dated Queen's Hotel, Toronto, Dec. 28, 1875, which I wrote upon that date. In it I find the following: —

"It is pretty evident that George Brown intends taking up telegraphy abroad for me, still I don't allow myself to indulge in too many hopes, lest I should be disappointed.

"He asked me to state definitely what interest I would be willing to give him; so I offered him one half interest in any patents he would take out abroad for me. He stated that the proposition was satisfactory, and that he would take the night to think of it. I am to meet him to-morrow at eleven o'clock. In the mean time I intend to employ myself upon telegraphy.

"I shall make drawings of the instruments and line connections, and think the whole subject over very carefully, so as to be prepared to state exactly what I want done for me."

The Exhibit 37 is one of the drawings referred to in the letter.

Int. 166. Please look at the official copy of your English patent, No. 4665, dated Dec. 9, 1876, and state when the provisional specification for that patent was drawn, and where and by whom it was drawn.

Ans. It was drawn by Mr. G. W. Gregory and myself in Boston. I do not remember the exact date, but my impression is that it was commenced in September or the beginning of October, 1876, that there was a delay of two or three weeks in completing it, and that it was completed about the end of October or the commencement of November.

[*Complainants produce an official copy of said patent and put in extracts from it as follows: The title and date of filing the provisional specification (to wit Dec.* 9, 1876), *and the "fourth plan" and "fifth plan" found on pages* 8 *and* 9 *of said printed copy of the provisional specification, and the drawings Figs.* 19 *to* 26 *inclusive, in said extracts referred to. It is marked "Complainants' Exhibit* 44, *Extract from Bell's English Provisional Specification, W. P. Preble, Jr., Examiner."*]

[*Adjourned to July* 12, 1879, *at* 11 *A. M.*]

3289

BOSTON, July 12, 1879.

Int. 167. Please look at the instrument now shown you; state when it was made, and if it is one of the instruments referred to in any of the memoranda of experiments which have been put in evidence, Exhibit 41, please point out under what date in those memoranda it is first referred to.

Ans. I have no means of fixing the date when it was made, excepting that it was before the 30th of June, 1876. My impression is that it had been made at least a month before, but of this I cannot be sure. The first note I have of its use is in the memorandum, Exhibit 42, dated June 30, 1876, where it is referred to as "a flat disk of Tagger's iron," and is shown in the first figure as the diaphragm Z.

Int. 168. Please describe generally what this instrument is.

Ans. It is a disk of soft sheet iron, known as Tagger's iron, mounted on a stout metallic ring or rim about four inches and a half interior diameter, the whole supported on three legs like a tripod. In use it was placed upon a base, and magnets of different kinds were placed under the diaphragm, with some arrangement for adjusting their distance from the diaphragm.

Int. 169. Was that instrument used as a transmitter on any occasion other than June 30, 1876?

Ans. It was so used on a number of subsequent occasions.

[*Complainants put in evidence said instrument, and it is marked "Complainants' Exhibit 45, Bell's Speaking Telephone Metallic Diaphragm, W. P. Preble, Jr., Examiner."*]

Int. 170. I call your attention to the subject of the interview at which Professor Dolbear, Mr. Hubbard and yourself were present, and which is referred to on page 304 and subsequently, in Professor Dolbear's deposition, and on page 436 and subsequently, in Mr. Hubbard's deposition. Please state what, if anything, you said to Professor Dolbear as to whether he or you had first invented the use of a permanent magnet as part of or attached to the core of the electro-magnet of a speaking telephone, or as to whether he or you had first invented the use of a metallic diaphragm in a speaking telephone.

3290

Ans. I have no recollection of saying anything to Professor Dolbear upon the subject. I was more a witness of the conversation between Professor Dolbear and Mr. Hubbard than a participant in it.

Int. 171. In your fifty-first answer, you referred to a letter which you received from Dr. Clarence J. Blake, dated Oct. 21, 1874, in which he referred to a letter from Mr. Elisha Gray: have you since seen that letter of Mr. Elisha Gray to Dr. Blake, and where is it now?

Ans. I have. Dr. Blake produced the letter as a part of his deposition in the harmonic telegraph interference case between Mr. Elisha Gray and myself, and a copy of it is to be found at page 121 of the printed evidence in that case.

Int. 172. Does that letter from Mr. Gray make any reference whatever to the transmission of vocal sounds, or make any statements as to the character of Mr. Gray's inventions, experiments or apparatus?

Ans. It does not.

Int. 173. Have you ever experimented to any considerable extent with diaphragms of different sizes, thicknesses and elasticity in speaking telephones? And if so, state what effect such differences have upon sounds produced at the receiving end.

Ans. I have made some hundreds of experiments for the purpose of ascertaining the effect of such differences upon the sound produced at the receiving end. When diaphragms of similar thickness were used, the following effects were noted: When the diameter was very large, say six inches, the articulation of the person speaking against it was reproduced by the receiving instrument distinctly, unchanged in pitch, but slightly peculiar in quality. A hollow resonant effect accompanied the articulation, somewhat as if the person were speaking with his head inside a barrel. When diaphragms of less diameter were used, the articulation of the speaker was not impaired, but the resonant effect accompanying the voice was less and less as smaller diaphragms were used, and a point was reached when the quality of the reproduced sound was not sensibly different from that of the speaker. When plates of still smaller diameter were employed, a nasal and slightly disagreeable effect accompanied

AMERICAN BELL TELEPHONE COMPANY, v.

3291

the articulation. With extremely small diaphragms a sort of "Punch and Judy" effect was produced. Similar effects were noted with diaphragms of similar diameters, but of different thicknesses. A very thin diaphragm gave the hollow effect, a medium thickness gave a more natural quality of voice, and a thick diaphragm occasioned the nasal or "Punch and Judy" effect. In all these cases the pitch of the reproduced sound was the same as that which occasioned the vibration of the transmitting diaphragm, and the articulation was equally distinct in every case. The quality accompanying the articulation was alone affected by the variations in the diameter and thickness of the transmitting diaphragms used.

[*Certain original papers and instruments have been produced by the witness, and have not been introduced as exhibits. The complainants offer them for inspection of the defendant's counsel, and will produce them upon cross examination, if required.*]

[*Adjourned to Monday, July* 14, 1879.]

BOSTON, July 14, 1879.

Int. 174. I call your attention to your London lecture, delivered before the Society of Telegraph Engineers, extracts from which have been put in evidence for the defendant. Please state the circumstances under which you delivered that lecture.

Ans. I was invited to deliver a lecture before the Society of Telegraph Engineers for the purpose of showing the various steps that had resulted in a speaking telephone. I accepted the invitation, and a special general meeting of the society was called. I delivered the lecture on the 31st of October, 1877, without notes, giving the various stages as well as I could from memory, as I had no memoranda with me to which to refer.

Int. 175. I call your attention to the extract on page 407 of that lecture, which the defendant has put in on page 183 of the record. State what experiment it was that you had in mind and which you there referred to in the following sentence: "My friend, Mr. Thomas A. Watson, who assisted me in this first experiment, declared that he heard a faint sound proceed from the telephone at his end of the circuit, but I was unable to verify his assertion."

[*Objected to as incompetent.*]

Ans. I gave my recollection of the result of the first experiment made with the membrane telephone referred to in my seventy-fourth answer.

Int. 176. At the time you gave your London lecture, what was your recollection as to the receiver used at that time, and as to whether your two first membrane telephones were made at the same time or at different times?

[*Objected to as incompetent.*]

Ans. It was my recollection that immediately upon performing the experiment illustrated by Figure 22 and described in my seventy-first answer, I gave instructions to Mr. Watson to have two membrane telephones constructed; that they were constructed within a few days, and tried, with the results noted in the passage quoted in the preceding question. My impression at the time of my lecture was that my first two membrane telephones were constructed at the same time, and that one of them was used as a receiver in my first experiment.

Int. 177. State whether you did or did not, before the issue of your patent March 7, 1876, construct or use any membrane speaking telephones other than the two of which Exhibits 31 and 34 (see your seventy-sixth and eighty-seventh answers) are duplicates.

Ans. I did not.

Int. 178. What did you mean by the following passage from page 407 of your London lecture: "The results, however, were unsatisfactory and discouraging"?

Ans. I expected so much that I was naturally disappointed to be unable myself to hear the results I had anticipated.

Int. 179. Were you or were you not discouraged by these discouraging results?

Ans. I was not. I never wavered in a full and firm belief that I had solved the problem of the transmission of articulate speech electrically, and that the apparatus we had constructed could be used for that purpose.

Int. 180. When did you first construct a membrane telephone with a piece of clock spring about the size and shape of your thumb nail, glued to the centre of the diaphragm?

Ans. Shortly after the granting of my patent of March 7, 1876. I think within the month of March.

Int. 181. I observe that the telephones constructed in June and July, 1875, of which Exhibits 31 and 34 have been put in evidence as duplicates, have a cylindrical and rather short tube between the membrane and the mouth of the speaker or ear of the listener. Had you ever, before your application for the patent of March 7, 1876, used cones for the two telephones of the shape shown in Figure 7 of that patent?

Ans. I had not.

Int. 182. Why did you show, in your patent, the cone A, which you there describe as "used to converge sound vibrations upon the membrane," and the cone L, from which the listener hears the sound proceed?

Ans. Because I believed such cones to be advantageous. These forms were well known in the state of the art at that time. I had become familiar with cones like that shown at A, for the purpose of conveying sound vibrations upon a membrane during the course of experiments with the phonautograph; and a cone of the form shown at L, was known to be often used in the construction of hearing trumpets.

Int. 183. Why did you show in Figure 19, of your English patent, as one form of telephone, two cones flaring out from the membrane, both like A in Figure 7, of the United States patent, instead of one flaring one and one converging one?

Ans. I thought that the illustration of my United States patent, Figure 7, might suggest the idea that one instrument was to be used only as a transmitter and the other only as a receiver; and I sought in my English specification, by making the two instruments of identical construction, to show that they could be used reciprocally.

Int. 184. Please look at Figure 25, on page 408 of your London lecture, and which purports to be a drawing of an iron cylindrical box-receiving telephone. The disk armature appears to be fastened to the box with a screw or rivet. Did you ever use one so fastened? State if you know how it happened that drawing was so made.

Ans. I presume that this drawing was made from an instrument which was presented to Sir William Thomson. I had the screw or

rivet placed on the instrument, in order that the metallic disk should not be lost. It was not intended to be used so fastened. The instrument I gave to Sir William Thomson was not the one used at Philadelphia, and is different in shape, though essentially the same.

[*Adjourned to Thursday, July* 17, 1879.]

BOSTON, July 21, 1879.

Cross Examination by CAUSTEN BROWNE, Esq., *of Counsel for Defendant.*

Cross-Int. 185. In your sixtieth answer you speak of making an exhibition in March, 1875, in the presence of Mr. Doten and Mr. Prescott, of your "method of multiple transmission of telegraphic messages." Do you here refer to the same invention which is mentioned in the fifty-ninth answer, where you say, "I was then in interference with Mr. Elisha Gray on the subject of harmonic multiple telegraphy"?

Ans. I do.

Cross-Int. 186. This invention so in interference with Mr. Gray was that for which you had filed application February 25, 1875, as mentioned by you in your patent No. 174,465, on page 50 of the record, was it not?

Ans. I made several applications, and the one alluded to was one of these.

Cross-Int. 187. I suppose that you refer to the same invention, where you speak in your ninety-fifth answer of your method of harmonic multiple telegraphy in which Mr. Hubbard was pecuniarily interested?

Ans. I do.

Cross-Int. 188. And I suppose this is the same invention or method which is referred to by you under the expression "harmonic telegraphy or multiple telegraphy," used in your eighth answer, and "my system of harmonic telegraphy," used in the thirteenth and also in the nineteenth answer?

Ans. It is.

Cross-Int. 189. The method of multiple telegraphy in question is described in your interference application of February 25, 1875, as consisting in the simultaneous transmission of signal sounds or

Ans. Shortly after the granting of my patent of March 7, 1876. I think within the month of March.

Int. 181. I observe that the telephones constructed in June and July, 1875, of which Exhibits 31 and 34 have been put in evidence as duplicates, have a cylindrical and rather short tube between the membrane and the mouth of the speaker or ear of the listener. Had you ever, before your application for the patent of March 7, 1876, used cones for the two telephones of the shape shown in Figure 7 of that patent?

Ans. I had not.

Int. 182. Why did you show, in your patent, the cone A, which you there describe as "used to converge sound vibrations upon the membrane," and the cone L, from which the listener hears the sound proceed?

Ans. Because I believed such cones to be advantageous. These forms were well known in the state of the art at that time. I had become familiar with cones like that shown at A, for the purpose of conveying sound vibrations upon a membrane during the course of experiments with the phonautograph; and a cone of the form shown at L, was known to be often used in the construction of hearing trumpets.

Int. 183. Why did you show in Figure 19, of your English patent, as one form of telephone, two cones flaring out from the membrane, both like A in Figure 7, of the United States patent, instead of one flaring one and one converging one?

Ans. I thought that the illustration of my United States patent, Figure 7, might suggest the idea that one instrument was to be used only as a transmitter and the other only as a receiver; and I sought in my English specification, by making the two instruments of identical construction, to show that they could be used reciprocally.

Int. 184. Please look at Figure 25, on page 408 of your London lecture, and which purports to be a drawing of an iron cylindrical box-receiving telephone. The disk armature appears to be fastened to the box with a screw or rivet. Did you ever use one so fastened? State if you know how it happened that drawing was so made.

Ans. I presume that this drawing was made from an instrument which was presented to Sir William Thomson. I had the screw or

3294

rivet placed on the instrument, in order that the metallic disk should not be lost. It was not intended to be used so fastened. The instrument I gave to Sir William Thomson was not the one used at Philadelphia, and is different in shape, though essentially the same.

[*Adjourned to Thursday, July* 17, 1879.]

BOSTON, July 21, 1879.

Cross Examination by CAUSTEN BROWNE, Esq., *of Counsel for Defendant.*

Cross-Int. 185. In your sixtieth answer you speak of making an exhibition in March, 1875, in the presence of Mr. Doten and Mr. Prescott, of your "method of multiple transmission of telegraphic messages." Do you here refer to the same invention which is mentioned in the fifty-ninth answer, where you say, "I was then in interference with Mr. Elisha Gray on the subject of harmonic multiple telegraphy"?

Ans. I do.

Cross-Int. 186. This invention so in interference with Mr. Gray was that for which you had filed application February 25, 1875, as mentioned by you in your patent No. 174,465, on page 50 of the record, was it not?

Ans. I made several applications, and the one alluded to was one of these.

Cross-Int. 187. I suppose that you refer to the same invention, where you speak in your ninety-fifth answer of your method of harmonic multiple telegraphy in which Mr. Hubbard was pecuniarily interested?

Ans. I do.

Cross-Int. 188. And I suppose this is the same invention or method which is referred to by you under the expression "harmonic telegraphy or multiple telegraphy," used in your eighth answer, and "my system of harmonic telegraphy," used in the thirteenth and also in the nineteenth answer?

Ans. It is.

Cross-Int. 189. The method of multiple telegraphy in question is described in your interference application of February 25, 1875, as consisting in the simultaneous transmission of signal sounds or

3295

tones telegraphically by the use of several tuned transmitting reeds and a like number of correspondingly tuned receiving reeds?

Ans. The method is not described in my application in the language of the question, but is substantially described as a method of transmitting a number of electric signals, or telegraphic signals or messages, simultaneously along a single wire by means of current interrupters and electro-magnetic receivers having vibratory armatures tuned to correspond to one another.

Cross-Int. 190. Is any allusion made in that specification to the use of any one of those tuned receivers for the purpose of hearing any tone except the tone of the transmitter tuned in correspondence with it?

Ans. There is no allusion to this unless the sentence "but other arrangements for the purpose may be devised," in illustration of which I describe a telephone as one form of common receiver, can be taken to allude to this.

Cross-Int. 191. Please describe a little more fully the telephone indicated in the passage referred to "being a telephone from the rod of which silk threads may lead to a series of bodies, such as tuning forks," etc. The construction of the telephone being such that "in case two or more different sets of impulses be transmitted simultaneously to the telephone, each will affect that one alone of the tuning forks whose vibrations are synchronous with the impulses."

Ans. I referred to the receiving instrument of Reis's telephone, consisting of a rod of iron about six inches in length, supported by its ends upon a sounding box, and placed in the interior of a helix of copper wire.

Cross-Int. 192. Referring to your nineteenth answer, where you say that in November, 1873, you heard from a single one of your tuned receivers, tones of different pitches transmitted by transmitters of different pitch, I understand the apparatus in the use of which this occurred to have been such an one as is represented in the drawing Figures 1 and 2, put in evidence with your fourteenth answer, and to have had two transmitting reeds and two receiving reeds, each of the two transmttting reeds being vibrated by its own local battery, and the circuit being made and broken at every vibration of either of the transmitting reeds. Was this so?

3296

Ans. The experiment is not completely described in the question. The instruments were substantially like those shown in Figures 11 and 12, and the arrangement upon the circuit is shown in Figure 2, excepting that during the course of the experiments a single receiver was placed in the circuit instead of two receivers, as shown in Figure 2. The batteries also only formed local batteries when the keys were raised. When the keys were depressed, the batteries were introduced into the main circuit, and then formed a single battery divided into two parts, arranged for quantity. The receiving instrument, from which two musical tones were audible, was similar to that shown in Figure 3. Otherwise than this the description in the question is correct.

Cross-Int. 193. It appears by the record of the harmonic multiple telegraph interference between you and Mr. Gray, that you prepared a caveat, sworn to October 27, 1874. Did you in that caveat describe or suggest the use of a common receiver of several different simultaneously transmitted tones? If so, will you quote the passage?

Ans. I did not.

Cross-Int. 194. You described in this caveat the apparatus you had used in November, 1873, as before referred to, in your answer to the nineteenth question, did you not?

Ans. I did.

Cross-Int. 195. In the printed record of your deposition, in the multiple telegraph interference case, you say after obtaining Mr. Sanders's pecuniary assistance, "we were advised to take out a caveat to protect the inventions during the period of having apparatus constructed for the purpose of applying for Letters Patent," and that Mr. Sanders's pecuniary assistance had been volunteered for the purpose of your obtaining Letters Patent for your inventions in the United States (I refer to your seventeenth and eighteenth answers in that interference). These things so stated were true, I suppose?

Ans. They were.

Cross-Int. 196. There appears in the same interference record what purports to be a copy of a letter from you to Mr. Gardiner G. Hubbard, dated November 26, 1874. Will you refer to the printed matter I refer to, and say whether it is a true copy of a letter written by you to him at that date?

3297

Ans. It is.

[*The counsel for the defendant puts in evidence a copy of the prin'ed letter of November* 26, 1874, *just referred to, and it is marked "Defendant's Exhibit Bell Letter to Hubbard, November* 26, 1874, *W. P. Preble, Jr., Examiner," also a copy of the Bell caveat of October* 27, 1874, *as printed in said interference record, and it is marked "Defendant's Exhibit Bell Caveat, W. P. Preble, Jr., Examiner."*]

Cross-Int. 197. In the same interference record I find printed what is entitled a "caveat supplement." Please look at it and see whether that is a true copy of a paper prepared by you as a supplement to your caveat of October, 1874.

Ans. It is a true copy of a portion of the original caveat. At the time my deposition was first taken in the harmonic multiple telegraph interference, I was unable to produce this portion of the caveat, but it was subsequently found and put into the case.

Cross-Int. 198. When did you first furnish to any one a description of, or make a drawing of, or make a model of, an apparatus in which a single plate of inductive metal was used for a transmitter and a single plate of inductive metal used for a receiver, the construction being such that the vibrations of the air produced by the human voice, directed against either of such plates, would be reproduced audibly by the other plate, so that the transmitting plate could be used to receive or the receiving plate to transmit, the operation being what is known as reciprocal transmission. Observe, I do not ask you when you conceived of it, but when, as matter of fact, you furnished to any one a description or made a drawing or made a model of it.

Ans. I furnished a description of such an apparatus for reciprocal transmission, in which the inductive plate was to be attached to a membrane, to Mr. Thomas A. Watson, on the 2d of June, 1875. Models were made soon afterwards.

Cross-Int. 199. Do you refer to the two telephones like those shown in your patent of 1876, having at each end of the line a hinged armature vibrated by a membrane?

Ans. I refer to the two telephones described in my seventy-fourth

and eighty-fourth answers, substantially like those shown in Figure 7 of my patent, having membranes carrying hinged armatures.

Cross-Int. 200. I did not intend to include in my question that construction. I meant to inquire as to a construction in which the inductive plate at each end of the line received the vibrations of the air directly, or in which such vibrations were received upon a membrane carrying as part thereof a piece or patch of inductive metal, as in the case of the membrane transmitter used at the Centennial.

Ans. I cannot give the exact date when such a construction of apparatus was first described or put into a drawing or model. I simply remember that it was not long after the granting of my patent of March 7, 1876; I think about the end of March or early in April, 1876.

Cross-Int 201. Do you understand that you have put in evidence already the description or drawing or model to which you now refer?

Ans. I am not certain whether one of the models put in evidence, Exhibit 40, was not made about that time, and is the original. I think it is; and the other models, Exhibits 38 and 39, though not the identical instruments used at that time, are substantially similar to them. I think the earliest description put in evidence is to be found in paragraph 12, Exhibit 9, page 164, of the record.

Cross-Int. 202. In the case you are now speaking of did you employ electro-magnets or permanent magnets?

Ans. Electro-magnets.

Cross-Int. 203. I understand you to have testified that in an experiment on or about June 2, 1875, you noticed that by the vibration of a tuned reed within the magnetic field of an electro-magnet, which was not at the time under the influence of a battery, but which was not yet discharged, the tone of the reed was reproduced at the receiving end by virtue of the residual magnetism in the core of the electro-magnet. That is so, is it not?

Ans. It is. The residual magnetism of the core and reed. The latter was of steel, and probably retained a greater amount of magnetism than the electro-magnet.

Cross-Int. 204. When did you first furnish to any one a description, or make a drawing, or make a model of an apparatus in which

permanent magnets were used instead of electro-magnets (no battery being employed), the undulations being thrown upon the line wire by the vibration of inductive plates within the field of the permanent magnets?

Ans. I furnished a drawing of such an arrangement within a few days after the 27th of October, 1874. I described such an arrangement previously to that date in Canada, at my father's house. The drawing referred to has been put in evidence in my forty-ninth answer, and is marked "Exhibit 30, Figure 2," and is described in my forty-eighth answer.

Cross-Int. 205. Does this forty-eighth answer describe an apparatus in which a permanent magnet and an inductive plate are employed at each end of a line wire, for the purpose of the electrical transmission of the vibrations of the plates?

Ans. It does describe such an apparatus, more than one plate being used at each end of the circuit.

Cross-Int. 206. Do you mean that an arrangement of permanent magnets, such as is shown in Figure 2 of Exhibit 30, was intended to be used at each end of the circuit?

Ans. Yes.

Cross-Int. 207. My Int. 204 was intended to inquire when you first furnished to any one a description or made a drawing, or made a model of an apparatus in which a permanent magnet was used instead of the electro-magnet at each end of the circuit, the undulations being thrown upon the line wire by the vibration of an inductive plate within the field of the permanent magnet at the transmitting end and producing corresponding vibrations in the corresponding inductive plate vibrating within the field of the permanent magnet at the receiving end. Will you tell me?

Ans. I think the question is fairly answered by reference to this same drawing, Figures 1 and 2, Exhibit 30. The mode of operation of the apparatus shown was presumed to be as follows: Upon vibrating one of the polarized reeds, shown in plan in Figure 1 and in section in Figure 2, a magneto-electric current would be generated in the coils surrounding the permanent magnets N S, N S, Figure 2, and this magneto-electro current, passed through the coils of a similar apparatus at the other end of the circuit, would occasion the

forcible vibration of that reed at the receiving station which was in unison with it.

Cross-Int. 208. You did not notice that my question was limited to an apparatus in which *a* permanent magnet was used instead of the electro-magnet at each end of the circuit, and did not embrace in its terms an apparatus in which a pair of permanent magnets was used at each end in the manner and for the purpose which you have been describing. With that explanation, please answer the question.

Ans. I must again refer to the same drawing, Exhibit 30. I described to Dr. Blake the effect of vibrating a polarized plate like those shown in this drawing in front of a permanent magnet, the poles of which were surrounded by coils of insulated wire. I drew such an arrangement and added on another permanent magnet arranged in the same way, to show him how the effect of the vibration could be increased by using a pair of magnets instead of a single one. The completed drawing is that shown in Figure 2, Exhibit 30.

Cross-Int. 209. You are speaking, I suppose, of the same thing you described in your answer to the forty-eighth question?

Ans. I am.

Cross-Int. 210. Now please tell me when you first had an apparatus in which a single permanent magnet, with a single inductive plate vibrating in its field, was used or to be used at each end of the circuit.

Ans. I do not know. I know that I used such an apparatus early in July, 1876, and although I cannot now recall the use of any such apparatus at an earlier date, I feel confident that I must have tried it before.

Cross-Int. 211. You mean by your last answer that you know you used, early in July, 1876, an apparatus having a single permanent magnet, with a single inductive plate vibrating in its field at each end of the circuit, and using no battery?

Ans. I cannot be certain whether such an apparatus was used at each end of the circuit, but i am certain that such an apparatus was used as a transmitting and receiving telephone without any battery upon the circuit early in July, 1876, and the permanent magnet used

3301

has been placed in evidence in my one hundred and sixty-third answer, and marked "Exhibit 43."

Cross-Int. 212. When you say that you are "certain" that such an apparatus was used as a transmitting and receiving telephone, do you mean that the same permanent magnet and vibrating plate (the magnet being Exhibit 43) were used first to transmit and then to receive?

Ans. I do.

Cross-Int. 213. Now please name the earliest time when you are certain that a permanent magnet and vibrating plate at each end of the circuit was used or constructed for use by or for you, no battery being employed.

Ans. About the end of October, 1876. I am sure such an arrangement was used by me at a very much earlier date, although I cannot now recall the details or the date.

Cross-Int. 214. How do you explain this language, which I find in your preliminary statement, made under oath in the speaking telephone interferences, I and J, such statement being sworn to November 20, 1878: "In the latter part of November, 1876, I dispensed altogether with the use of a battery in my working instrument, and used permanent magnets and metal diapraghms in both my transmitting and receiving instruments, the instruments being duplicates of each other"? This appears to me to be inconsistent with the statement you now make, that about the end of October, or much earlier, you had in use an apparatus with a permanent magnet and vibrating plate at each end of the circuit and no battery. How do you reconcile them?

Ans. The passage in the preliminary statement refers to the time when I relinquished the use of a battery entirely in my experiments and had permanently adopted the permanent magnet as a substitute. Previously to that time I had been using experimentally sometimes permanent magnets, sometimes batteries.

Cross-Int. 215 (*de bene*). In your letter dated November 12, 1876, put in evidence in your one hundred and sixty-fourth answer, you say, "This evening we have made another discovery of a very important kind, which will lead to the reduction of battery required or to the omission of batteries altogether." What was that im-

portant discovery which you made in the evening of November 12, 1876?

Ans. The discovery that a permanent magnet telephone could be practically used on a real line of considerable resistance without any battery on the circuit. I had been using permanent magnet telephones before in laboratory experiments, but this, I believe, was the first time I had practically tested such instruments upon a real telegraph line, although I had constructed an instrument in July, 1876, intended to be used in attempting to transmit speech between Boston and Philadelphia, if the judges of the Centennial Exhibition had called for the experiment. The magnet of that instrument has already been referred to, and has been put in evidence as Exhibit 43.

Cross-Int. 216. I wish now to read you the sentence just quoted from your letter of November 12, 1876, in connection with the sentence next preceding, the whole being as follows: "We cut out the battery, and could distinctly hear the tones of Mr. Watson's voice singing one of Moody and Sankey's hymns, without any battery at all. This evening we have made *another* discovery of a very important kind, which will lead to the reduction of the battery required or to the omission of batteries altogether." Do you still say that what is referred to as "another discovery" was the discovery that the magneto-electric impulse alone, without a battery, could be transmitted over a long line?

Ans. I said that the discovery was that a "permanent magnet telephone" could be practically used on a real line of considerable resistance. The first sentence quoted referred to an experiment without a battery, in which the magnets used were ordinary electro-magnets, which retained some residual magnetism. The latter sentence refers to an experiment in which a permanent magnet telephone was used, and the results were so much better than in the first experiment as to convince me that such telephones could be practically used upon real lines.

Cross-Int. 217. When I represented you in my last question as having said that what was referred to as "another discovery," was the discovery that the magneto-electric impulse alone, without a battery, could be transmitted over a long line, I did not observe

that you had (properly, of course) struck out from your two hundred and fourteenth answer these words which fell from your lips, and were at first recorded with your answer: "And it took much time and many experiments to disabuse my mind of the idea that had been in my way from my first conception of the magneto-electric speaking telephone in 1874 up to that time, namely, that the currents generated in such an apparatus, without a battery, would be too feeble for practical use upon real lines." It is true, is it not, that you had been under that impression?

Ans. It is true that I was fully under that impression up to July, 1876. I then began to doubt whether I had not been mistaken in this idea. Subsequent laboratory experiments served to strengthen the doubt, and the experiment referred to demonstrated that permanent magnet telephones could be practically used on real lines.

Cross-Int. 218. You mean the experiment of Sunday, November 12, 1876, between Boston and Cambridge?

Ans. I do, although I believed that other experiments previously made, but not on real lines, had demonstrated this point.

Cross-Int. 219. Did you actually use a permanent magnet at each end of the line, in place of the electro-magnets and without a battery, in the experiment between Boston and Cambridge on Sunday, November 12, 1876?

Ans. I am not sure; my impression is that a permanent magnet telephone was used at one end and an electro-magnet telephone at the other. I may, however, be mistaken in this, and it is quite possible that permanent magnet telephones were used at both ends.

Cross-Int. 220. Are you quite sure that a permanent magnet telephone was used at either end of the line in that experiment of Sunday, November 12, 1876?

Ans. I am quite sure that a permanent magnet telephone was used at the Boston end.

[*Adjourned to July* 12, 1879, *at* 2.30 *P. M.*]

BOSTON, July 23, 1879.

Cross-Int. 221. Referring now to your twenty-first and twenty-second answers, in which you say that in the winter of 1873, you think about December, you arranged your multiple telegraph instru-

ments with an induction coil placed between the interrupter and the receiver, and produce three drawings, Figures 4, 5 and 6, which are copied at page 449 of the record, representing such arrangements and a modification of them, I will ask you to explain briefly the operation of what is shown in these drawings, first in Figures 4 and 5 and afterwards as modified in Figure 6.

Ans. Figures 4 and 5 represent the arrangement devised in the winter of 1873. At each station shown in Figure 4 an interrupter is placed in the primary circuit of an induction coil with a local battery. The secondary circuit of each coil is normally short circuited by a telegraph key. The depression of the key causes the secondary circuit of the coil to form a portion of the main current, and the impulses induced in the secondary coil by the operation of the interrupter in the primary circuit are thus caused to traverse the main circuit, passing through the coils of all the receiving instruments, and causing the forcible vibration of the armatures of such of those receivers whose rates of vibration correspond to that of the armature of the interrupter in the primary circuit. The instruments are so arranged that the depression of any key causes the forcible vibration of one and one only of the receiving instruments at each station, producing from it a loud musical tone, the duration of which depends upon the length of time the telegraph key is kept depressed. Thus the operation of any telegraph key in the ordinary manner to transmit a telegraph message by the Morse system causes a succession of loud musical tones from one of the receivers at each station, the duration of each sound corresponding to the dot or dash of the Morse alphabet, so that the message transmitted could be read by any skilled Morse operator listening to the receiving instrument. At each station the interrupters used were to have different rates of vibration, and the receivers at each station corresponded respectively to the interrupters in their normal rate of vibration. The advantage derived by the multiple arrangement of interrupters and receivers was that more than one telegraphic message could be transmitted and received simultaneously without confusion. It was only necessary that the messages should be transmitted by means of interrupters having different rates of vibration, the signals from the interrupters affecting different receivers at each station.

3305

The arrangement shown in Figure 5 illustrates a plan of doubling the carrying capacity of the wire under the harmonic multiple telegraph system shown in Figure 4. The current from an interrupter is shown in Figure 5 to be divided between two induction coils, one portion of the intermittent current passing through the primary circuit of one of the coils, the other portion through the primary circuit of the other. The secondary circuit of one of the coils (which is here designated as the primary induction coil) forms a portion of the main circuit, and the currents induced in it traverse the coils of the receiving instruments shown, which represent one receiver at the same station and another at a distant station, both corresponding in rate of vibration to that of the interrupter shown. The secondary circuit of what is here termed the secondary induction coil is connected with coils passing around the magnet of the receiving instrument at the same station, the wires being so connected that the induced currents from the secondary induction coil oppose those from the primary induction coil in the receiving instrument. Resistance is inserted at R, so as to make the currents from the secondary induction coil just powerful enough to neutralize the effect of the primary induction coil upon the receiving instrument at that station. Thus any signals sent by means of the interrupter shown in Figure 5 would affect corresponding receivers at distant stations, but would not affect the corresponding receiver at its own station. But that receiver would be affected by impulses transmitted from a corresponding interrupter of a distant station; and thus, while the operator at the station shown in Figure 5 could be sending a message by means of the transmitter shown, another operator at that same station could be receiving a different telegraphic message from a distant station, sent by the operation of an interrupter of similar rate of vibration to that operated at his own station. I proposed to duplex each interrupter and corresponding receiver, as shown in this diagram, at each station.

In Figure 6 is shown a modification of the plan shown in Figure 4, in which a common induction coil is used at each station for all the interrupters and receivers. The secondary wires of the coil are permanently in circuit with the main line, but a switch or "cut-off" is arranged, by means of which the secondary coil may be short-

3306

circuited when the interrupters are not in use, so as to reduce the resistance of the main line. A single battery is employed to work all the interrupters at each station, and the depression of any key causes the current from any interrupter to pass through the primary circuit of the induction coil, and thus causes secondary impulses to appear upon the main line, occasioning the forcible vibration of the proper receiver at each station, and the audible production of the proper musical signal.

Cross-Int. 222. In your preliminary statement, sworn to May 8, 1876, in the multiple telegraph interference, I find this passage: "I saw that one wire would suffice for communications simultaneously in both directions, if free earth communication could be secured at each end of the line. My first attempt to solve the problem was by the application of artificial resistance, as shown in Figure 10. When the line was put to earth at the two extremities of the circuit A and N, any intermediate station (C) could cause half the intermittent current from its battery to pass to earth at A and the other half to the earth at N, by putting sufficient resistance on the shorter circuit. Study of the arrangement, however, convinced me that the problem could not be solved by any arrangement of artificial resistances, and I was for a time at a loss how to overcome the difficulty. Early in December, 1873, it flashed across me that the intermittent current might be induced upon the line wire, in which case there would be no difficulty in having free earth communication at both ends of the circuit. The arrangement, as conceived, is shown in Figure 11. I saw, also, that the duplex principle could be applied, as in Figure 12, so as to double the number of messages possible upon the acoustical plan." Does this passage refer to the same arrangement for inducing the intermittent current upon the line wire that you describe in your last answer?

Ans. A portion of it does, the part referring to Figures 11 and 12. Figures 4 and 5, on page 449 of the record, are reproductions of these.

Cross-Int. 223. When were these figures, as put in with the preliminary statement and as there designated Figures 11 and 12, made?

Ans. They were drawn somewhere about the 27th of April,

3307

1876, for my preliminary statement in the harmonic telegraph interference, but similar drawings were made a very long time before that date, certainly in January, 1874, if not earlier.

Cross-Int. 224. I understand you to say in effect, that drawings, such as Figures 4 and 5, page 449 of the record, were made at or shortly after your conception in December, 1873, of the arrangement which such drawings show for inducing the intermittent current upon the line wire, and for the application of the duplex system.

Ans. I do. Of course I cannot be sure that the drawings were identical in every particular as to form of apparatus, etc., but I am sure that drawings were made at that time substantially similar to those in Figures 4 and 5 of the record in arrangement upon circuit, and in every particular essential to the conceptions described in my two hundred and twenty-first answer.

Cross-Int. 225. Did you practically try the arrangement which you so conceived in December, 1873, for inducing the intermittent current on the line wire?

Ans. I did not at that time.

Cross-Int. 226. At what time did you?

Ans. I made numerous experiments with induction coils in the winter of 1874–5, but I cannot be certain that the full arrangement of circuit shown in Figure 4 was tried, but I believe it was. I at all events remember experimenting with a single induction coil, having an interrupter and receivers arranged as in Figure 4; and I remember changing the interrupter, substituting for it an interrupter of different rate of vibration. The point I am uncertain about is as to whether a number of induction coils were used, as in Figure 4. The arrangement shown in Figure 5 was not tried. I cannot fix the dates of these experiments otherwise than the winter of 1874–5. They might have been as early as the 1st of November, 1874.

Cross-Int. 227. Going back for a moment to the drawings or sketches which were made (similar to Figures 4 and 5) in or shortly after December, 1873, when you conceived the idea of inducing the intermittent current on the line wire, did you preserve these sketches up to the time of preparing your caveat with similar ones, in October, 1874, or did you make the caveat sketches in October, 1874,

from memory of the original ones or of the device which they were made to represent?

Ans. The drawings for my caveat were made some of them from memory, others from memoranda that had been made at an earlier time; but whether the particular drawings referred to were made from memory or from the original sketches, I do not now remember. Numerous sketches had been preserved that were made in January, 1874, but I cannot now remember whether these were among the number; my impression is that they were.

Cross-Int. 228. I suppose the original sketches which I inquired about are not now in existence?

Ans. I do not know. When my deposition was taken in the harmonic telegraph interference, some original sketches made in the winter of 1873–4 were put in evidence, and I presume have been preserved. Others were not put in evidence, and I do not know what has become of them. It is probable they are still in existence, but I have not found any among my memoranda. I cannot say at the present moment whether the original sketches referred to were put in evidence in the harmonic telegraph interference case or not.

Cross-Int. 229. After the experiments were tried in the winter of 1874–5 which you have mentioned, what did you ever do with a view to the practical trial of the arrangement you had conceived for inducing the intermittent current on the line wire, or for any use of the induction coil between the interrupter and the receiver?

Ans. I satisfied myself by practical experiment that an induction coil could be practically used, but my difficulty was to get interrupters so tuned as not to interfere with one another's action. A great portion of my time, from February, 1875, to June, 1875, was taken up in experiments to overcome this difficulty.

Cross-Int. 230. With what result?

Ans. The experiments led me to the discovery made on the 2d of June, 1875, which has been described at length in my deposition.

Cross-Int. 231. Please now briefly describe that discovery again.

Ans. The discovery was that the magneto-electric current produced by the vibration of a steel reed or of a permanent magnet, in front of an electro-magnet, was sufficiently powerful to be utilized for the production of sounds by electric means.

3309

Cross-Int. 232. And this discovery enabled you to induce currents as desired in a primary circuit, did it?

Ans. It did.

Cross-Int. 233. Did you at any time after that make any practical trials in reference to the use of an induction coil for inducing currents upon the line wire?

Ans. I did; many.

Cross-Int. 234. For what purpose and with what result?

Ans. For the purposes of multiple telegraphy. I found that the currents induced in the secondary circuit of an induction coil by the action of an interrupter in the primary circuit occasioned a much more powerful vibration of the tuned reeds of my harmonic receivers than the magneto-electric currents I was then able to produce.

Cross-Int. 235. Did you, in consequence of this observation, apply to practical use the induction coil with a secondary circuit?

Ans. I did not. I kept it in view in experiments relating to multiple telegraphy, but I believed that the magneto-electric currents possessed many advantages for this purpose if the strength of the magneto-currents could be increased, and that they could be used in addition for the transmission of articulate speech electrically; and I therefore devoted most of my time to ascertaining the conditions under which the most powerful magneto-currents were produced.

Cross-Ins. 236. And in that direction you met with satisfactory success, did you not?

Ans. I met with encouraging success in this direction.

Cross-Int. 237. And at last with satisfactory success?

Ans. I did.

Cross-Int. 238. Did you ever describe or show in any patent of yours, in this country or abroad, the use of an induction coil for the purpose of inducing a current upon the line wire?

Ans. I did. In my English patent of December 9, 1876, and in an application for a United States patent, filed March 10, 1875, and also referred to in defendant's Exhibit A, being an application of February 25, 1875, where I say, "A single wire for communication in both directions may be used. This will necessitate the employment of an induced current, and in this case the duplex principle can be applied to my system. The arrangement of apparatus for

this purpose I do not, however, here describe, inasmuch as I make it the subject of separate application for Letters Patent."

Cross-Int. 239. Did this "separate application" proceed to patent, or was it stopped by interference; and if so, with what?

Ans. It was stopped by interference with an application or applications of Mr. Elisha Gray, and the interference has not yet been decided.

Cross-Int. 240. I hand you a printed copy of an American application for a patent by yourself, filed March 10, 1875, and ask you whether that is the "separate application" above referred to?

Ans. It is.

Cross-Int. 241. To identify the application just shown you, I will ask you if it contains the following from the preamble and the claim: "My present invention is directed to the adaptation of the system aforesaid to an *induced* current, whereby messages can be sent in both directions along a single line wire. To effect the transmission along the line wire of a succession of secondary or induced electrical impulses, I find it to be necessary that the successive and alternate makes and breaks of the primary circuit should be of equal and uniform duration. . . . What I claim and desire to secure by Letters Patent is: in a system of telegraphy in which the receiver is put in vibration by electrical impulses sent along the line wire from the transmitting station, as described, I claim the employment at the transmitting station, in connection with the line wire and an induction coil, of a primary circuit [and] apparatus for making and breaking said circuit a definite number of times per second or other unit of time, with makes and breaks of equal duration, substantially in the manner described, so that the positive and negative impulses thereby induced in the line wire shall succeed each other at equal intervals of time"?

Ans. It does.

Cross-Int. 242. Was this application of yours put in interference with the then pending application of Gray, filed June 27, 1874, on page 582 of Vol. II. of the printed record, and on which he obtained, July 27, 1875, his patent, No. 166,095; or with the then pending application of Mr. Gray, filed April 18, 1874, on which he obtained

a patent, July 27, 1875, No. 166,096, which is found on page 621, Vol. II. of the printed record?

[*Objected to as immaterial and incompetent.*]

Ans. I do not know.

Cross-Int. 243. Do both of the patents of Mr. Gray to which I just referred, and for which his applications were pending in March, 1875, show a primary circuit and a secondary circuit, currents being induced in the secondary by an induction coil?

Ans. They do show a primary and secondary circuit, currents being induced in the secondary circuit by the rapid interruption of the primary circuit.

Cross-Int. 244. In your preliminary statement in the multiple telegraph interference, I find these passages: "During the summer of 1874, doubts occurred as to the operation of the induced current. When the primary circuit of an induction coil is closed, a momentary impulse of positive electricity is induced upon the secondary circuit, and when it is opened, an impulse of negative electricity appears upon the wire. I feared that the induced current would be insufficient to set the armatures of the receiving instruments in operation, unless the negative impulses came exactly midway between the positive impulses, and unless the armatures of the receiving instruments were rendered permanently magnetic, so as to be alternately attracted and repelled by their electro-magnets. The thought occurred of inducing the impulses by means of a permanent magnet instead of a battery."

"Reflection convinced me that however feasible the scheme looked upon paper, it was impracticable, as the induced currents would be far too feeble to overcome any great resistance. For the same reason, the plan shown in Figure 15 seemed impracticable save in theory, and I began to look about for some other method of inducing alternate positive and negative impulses, which should succeed each other at equal intervals of time, and at last I hit upon the plan of making and breaking contact by means of a revolving cylinder, as shown in Figure 17. In the autumn of 1874, Mr. Thomas Sanders, of Haverhill, Mass., offered to assist me in obtaining patents. It was decided to file a caveat," etc.

Was the "plan of making and breaking contact by means of a

revolving cylinder, as shown in Figure 17," an apparatus similar to that mentioned in the claim of your application of March 10, 1875, for making and breaking the circuit a definite number of times per second, or other unit of time, with makes and breaks of equal duration? If not, how did it differ substantially from it?

Ans. It was such an apparatus. I should like to remark in reference to the first part of the question, that the scheme which I stated appeared to me in the summer of 1874 as "impracticable," on account of the supposed feebleness of the induced currents, referred to my method of inducing currents by the vibration of magnetized reeds, and did not refer to the currents induced by an induction coil and battery alluded to in the first part of the quotation.

Cross-Int. 245. I will ask your attention again to the subject of the experiment in which, being engaged in the transmission of the tones of two tuned transmitting reeds, for the purpose of vibrating two correspondingly tuned receiving reeds, you observed that the tones of both the transmitting reeds were audible from one of the receiving reeds, which happened to be out of tune with its mate. Did you satisfy yourself at that time that the sound of two transmitted notes which you heard did not proceed from the core of the magnet? I refer to the experiment of November, 1873, mentioned in your nineteenth answer.

Ans. I did not. The idea did not occur to me under the circumstances of the experiment; for I felt the trembling of the armature with my finger, and I did not know at that time that a sound was produced by a core under the circumstances of the experiment.

Cross-Int. 246. Did you ever satisfy yourself on that point, either as to that experiment or as to any subsequent one conducted under exactly similar conditions?

Ans. I did.

Cross-Int. 247. Will you describe how you so satisfied yourself and when it was, and state the circumstances?

Ans. In November, 1874, I discovered that a sound proceeded from the core of an electro magnet which was placed in circuit with a current interrupter, and shortly afterwards I compared the sound produced in this manner with the sound produced from a reed sub-

3213

jected to the attraction of that same electro-magnet. I cannot recall the details of any particular experiment made to test this point, but can give the general results of a number of experiments made during the winter of 1874–5, which satisfied me upon the point alluded to. I found that a musical tone was audible upon placing the ear in close contact with the reed when it was held at a considerable distance from the pole of the electro-magnet, but still within its field. Upon gradually bringing the reed nearer to the magnet the loudness of the sound increased, but upon touching the pole of the magnet the sound changed its character altogether. It was much feebler and different in quality. It was also noticed that the sound audible from the core of the magnet when the reed was removed was materially different in quality from that heard from the reed when it was held a short distance from the pole. The sound audible from the core partook more of the nature of a *noise* than a musical note, and was accompanied by a curious crackling effect, while that heard from the reed had more of a musical quality about it, and no crackling effect accompanied it.

Cross-Int. 248 (*de bene*). In your letter of March 18, 1875, put in evidence with your fifty-seventh answer, you speak of telling Professor Henry "that on passing a current of intermittent electricity through an empty helix of insulated copper wire, a noise could be heard proceeding from the coil similar to that heard proceeding from the telephone." Did you never afterwards learn that that fact had been observed already by some one before you?

Ans. I did. I found that this fact had been discovered by De la Rive. It is referred to in a paper by him in the *Annales de Chimie et de Physique*, 3d series, Vol. XVI. page 104.

Cross-Int. 249 (*de bene*). In this same letter, you speak of an exhibition which you made shortly before the date of the letter at the office of the Western Union Company, in New York. Do you mean to be understood by what you say in the letter on that subject, that Messrs. Orton & Prescott received what you then communicated to them as new and valuable in comparison with what they already knew?

Ans. Such was the impression I derived from my conversations with them.

3814

Cross-Int. 250. Will you state any particular thing which Mr. Prescott said, or which Mr. Orton said in his presence, that gave you this impression?

Ans. Mr. Prescott devoted a considerable portion of his time to questioning me concerning the details of my scheme of harmonic multiple telegraphy, and seemed much interested in the subject on the occasion of my first visit to the Western Union office; and on the occasion of my second visit, which was next day, I requested the return of the apparatus which I had left at the office for the purpose of exhibiting the same to the president of the Atlantic and Pacific Telegraph Company. Mr. Prescott seemed much disturbed at this, and requested me to wait while he talked with Mr. Orton concerning the matter. I did so. Mr. Prescott was gone a very long time, my impression is about an hour, and when he returned, he stated that Mr. Orton was anxious to see me upon the subject. I thereupon saw Mr. Orton, and had some conversation with him, which I do not give, as it was not in Mr. Prescott's presence, and I understand is not called for by the question. I left my instruments at the Western Union office, where I presume they are now. I do not remember any particular remark made by Mr. Prescott that gave me the impression that he considered my invention novel and valuable, but his whole conduct and manner referred to above led me to believe so.

[*Adjourned to July* 24, 1879, *at* 10 *A. M.*]

BOSTON, July 24, 1879.

Cross-Int. 251. There is in the record, at page 150, a letter of yours to Mr. Gray, dated March 2, 1877, in which you say, "I do not know the nature of the application for a caveat to which you have referred as having been filed two hours after my application for a patent, except that it had something to do with the vibration of a wire in water," etc. How did you come to know as much as that about the nature of a paper in the confidential archives of the Patent Office?

Ans. When I found that my application was in interference with some other application filed in the Patent Office, I went to Washington to examine into the matter, for I understood that an applicant

3915

in interference had a right to see that portion of the interfering application which conflicted with his invention. I therefore went to the Patent Office and requested the examiner to explain to me the exact points of interference between my application and the other. I found that there had been two interferences declared with my application. The first was with a caveat filed the same day as my application, and had already been dissolved. The examiner declined to show me the caveat, as it was a confidential document, but he indicated to me the particular clause in my application with which it had conflicted. I therefore knew it had something to do with the vibration of a wire in a liquid. I do not now remember what it was that led me to suppose that that liquid was water.

Cross-Int. 252. You mean to be understood, I suppose, that you did not see either the description or the drawings, making part of that caveat, or any part of that description or the drawings?

Ans. I do.

Cross-Int. 253. I understand that when you speak of the examiner's indicating to you what part of your application it was that interfered with the caveat, you speak of an indication given by him in conversation with you and not by official letter: am I right?

Ans. Yes. He simply pointed to a clause in my application and stated that the caveat had interfered with that.

Cross-Int. 254. Was the clause which he pointed to one of the claims of your application or some passage in the body of the application?

Ans. A passage in the body of the application.

Cross-Int. 255. Please read the passage that he pointed to, telling you that that was the passage where the interference lay.

Ans. "Electrical undulations may also be caused by alternately increasing and diminishing the resistance of the circuit, or by alternately increasing and diminishing the power of the battery. The internal resistance of a battery is diminished by bringing the voltaic elements nearer together, and increased by placing them further apart. The reciprocal vibration of the elements of a battery occasions an undulatory action in the voltaic current. The external resistance may also be varied; for instance, let mercury, or some other liquid, form part of a voltaic circuit, then the more deeply the

conducting wire is immersed in the mercury or other liquid the less resistance does the liquid offer to the passage of the current; hence the vibration of a conducting wire in mercury or other liquid, included in the circuit, occasions undulations in the current. The vertical vibration of the elements of a battery in the liquid in which they are immersed produces an undulatory action in the current by alternately increasing and diminishing the power of the battery."

The examiner indicated the clause just quoted as the passage where the interference lay. I do not remember whether he pointed to any particular sentence in this clause or not. My impression is that I asked the examiner whether the point was the "vibration of the conducting wire in mercury or other liquid." At all events, I carried away the impression that this had been the point at issue.

Cross-Int. 256. Who was the examiner? Was it Mr. Wilbur?

Ans. I do not know. I think it was Mr. Wilbur, but I am not perfectly certain.

Cross-Int. 257. In your answer to the seventy-third interrogatory, you say that on the 2d of June, 1875, you attempted to generate magneto-electric currents by vibrating a regular permanent steel magnet in front of a soft iron core wound with coils of wire, there being no battery on the circuit. Did the apparatus you used consist in a permanent magnet formed like a tuning fork and set in vibration by a blow, like a tuning fork, and held near the core so that the vibrations would induce currents upon the line?

Ans. It did.

[*By agreement of counsel, the whole of the provisional specification and drawings of Mr. Bell's English patent, dated December* 9, 1876, *is put in, and marked "Complainants' Exhibit* 44, *Bell's English Provisional Specification," instead of the extract from it put in after Mr. Bell's one hundred and sixty-sixth answer, page* 503 *of the record.*]

Cross-Int. 258. Does your preliminary statement in the speaking telephone interference, sworn to November 20, 1878, contain the following: "Another instrument with stretched membrane was immediately constructed, and the experiment spoken of in said letter was tried of transmitting speech. One instrument was placed in my experimental room at the top of the building and the other in the

3317

workshop below. I spoke from my room to Mr. Watson, and he spoke to me from below. I heard nothing, but Mr. Watson soon rushed up stairs, and said he could hear my voice but could not make out what I said. We then changed places, but with the same results. He heard my voice, but I could not hear his"?

Ans. It does.

Cross-Int. 259. The apparatus used in the experiment described in this quotation was the apparatus described in your patent of 1876, on which this suit is brought, and delineated in Figure 7 of the drawings, was it not?

Ans. It was substantially similar.

Cross-Int. 260. Do you remember any difference between the apparatus used in that experiment and the apparatus described and shown in the patent?

Ans. I do. The transmitting and receiving cones shown in the patent were not employed. The armatures used in the experiment referred to were hinged to the uncovered leg of the magnet by a strip of leather. The coils used in the experiment were not specially adapted for use upon a line. I am not sure also whether any battery was used in the experiment.

Cross-Int. 261. Do you remember anything more in regard to the construction of that experimental instrument, either as to what it did contain and the patent does not, or to what it did not contain and the patent does?

Ans. The experimental instrument had an arrangement for straining the membrane and a framework for holding the magnet which are not shown in the patent.

Direct Examination resumed.

Int. 262. Please look at the quotation from your preliminary statement given in the two hundred and twenty-second question. Are the facts stated in that quotation true?

[*Objected to.*]

Ans. Yes.

Int. 263. Please look at the quotation contained in the two hundred and forty-first cross-interrogatory and state whether the "induced current," referred to in the quotation, is induced by a mag-

neto-electric apparatus or by an induction coil, battery and circuit breaker.

Ans. An induction coil, battery and circuit breaker.

Int. 264. Please look at the two passages quoted in the two hundred and forty-fourth cross-interrogatory and produced to be put in evidence, all the paragraphs in which those quotations are found and all that intervene between them.

Ans. I produce them.

[*Complainants put in evidence said passages, and they are marked "Complainants' Exhibit 46, Extract Bell's Preliminary Statement in Harmonic Interference, W. P. Preble, Jr., Examiner."*]

Int. 265. Please look at your one hundred and ninety-third cross-interrogatory and answer. State why you did not, in your caveat of October 27, 1874, describe or suggest the use of a common receiver of several different simultaneously transmitted tones.

[*Objected to.*]

Ans. Because it was not relevant to the subject matter of my invention, my object being to have a receiver which should respond markedly to one tone only.

Int. 266. Please look at Exhibit 30 and state whether any of the sketches in that exhibit, except Figure 1 and Figure 2, do or do not represent an apparatus in which the core of the electro-magnet was kept continuously polarized, when not under the influence of a battery, by induction from a permanent magnet.

Ans. Figure 4 of Exhibit 30 shows such an apparatus.

Int. 267. Did your original idea of using permanently magnetized cores, around which to wind the coils in your telephones, contemplate the use of such polarized cores for the transmitters, or for the receivers, or for both?

[*Objected to.*]

Ans. For both.

Int. 268. What was the objection in your mind to that form of apparatus which led you at one time to prefer the use of a battery instead of depending upon permanent magnetization of the cores?

[*Objected to.*]

Ans. I thought at that time that the currents produced by the vibration of an armature in front of such core would be too feeble

to produce practically useful results upon a line of any considerable resistance.

Int. 269. Did that difficulty in your mind relate to the use of polarized cores in the transmitter, or in the receiver, or both?

[*Objected to.*]

Ans. In the transmitter simply.

Int. 270. What difficulty occurred in your mind at that time in using the polarized core for an instrument intended merely for a receiver?

[*Objected to.*]

Ans. No difficulty. I thought at that time that a polarized core in the receiver made the instrument more sensitive.

Int. 271. What led you to entertain that opinion?

[*Objected to.*]

Ans. I understood at that time that the most sensitive telegraphic instruments were polarized relays in which such a core was employed.

Int. 272. What difficulty occurred to your mind as to the use of such an instrument at one end of a line over which reciprocal transmission — that is, transmission sometimes in one direction and sometimes in the other — was to take place?

[*Objected to.*]

Ans. I feared that, when such an instrument was used as a transmitter by speaking to it, the currents produced by the action of the voice would be too feeble for practical purposes.

ALEXANDER GRAHAM BELL.

Attest: W. P. PREBLE, Jr., *Examiner.*

DEPOSITION OF A. M. BELL.

BOSTON, July 12, 1879.

Direct Examination by J. J. STORROW, Esq., *of Counsel for Complainants.*

Int. 1. Please state your name, age, and residence, and whether you are related to Professor A. G. Bell.

Ans. My name is Alexander Melville Bell; my age is sixty;

my residence in the township of Brantford, Ontario, and Professor A. G. Bell is my son.

Int. 2. Please look at the original of the letter of March 18, 1875, referred to in Mr. A. G. Bell's fifty-seventh answer, at the original of the letter of May 24, 1875, referred to in Mr. A. G. Bell's sixty-seventh answer: state in whose handwriting they are, whether you received them on or about their respective dates, and in whose possession they have remained since you received them.

Ans. The letters shown me, dated Salem, March 18 and May 24, 1875, are in my son's handwriting. They were received by me in due course of post, and have been in my custody until Nov. 13, 1878, or thereabouts.

Int. 3. While your son was at your house in the summer of 1874, did he say anything to you about any plans he had for the transmission of articulate speech by electricity?

Ans. He did.

Int. 4. Please state when it was, what he said to you so far as you recollect, and if you have any memorandum of that conversation made at the time, please produce it and read it as a part of your answer.

Ans. On July 26, 1874, he explained to me with more detail than I could follow, and illustrated by diagrams, certain plans for the electric transmission of speech. I fix the date and fact of this illustrated conversation by a note in my diary on Sunday, July 26th, containing simply the words, "New Motor (hopeful). Electric speech (?)."

Int. 5. Please state whether during his visit at your house in the summer of 1875, he said anything to you about the transmission of articulate speech by electricity. If yea, state what you recollect of what he said, and if you have any memorandum of that conversation made at the time, please read it as part of your answer.

Ans. On the 12th of September, 1875, I had noted in my diary, "Telephone talk — wonderful"; but I have no recollection of the details of the conversation. The record undoubtedly refers to what I had been told as accomplished facts. This conversation was held with my son on that day.

[*Cross examination waived.*]

ALEX. MELVILLE BELL.

Attest: W. P. PREBLE, Jr., *Examiner.*

3521

BOSTON, July 14, 1879.

DEPOSITION OF THOMAS A. WATSON.

Direct Examination by J. J. STORROW, Esq., *of Counsel for Complainants.*

Int. 1. Please state your name, age, residence, and occupation.

Ans. Thomas A. Watson; twenty-five; Boston, Mass.; general inspector of the National Bell Telephone Company.

Int. 2. When and how did you first become acquainted with Mr. A. G. Bell?

Ans. By making instruments for experimental purposes for him, in the winter of 1874–5 at Charles Williams, Jr.'s, manufactory, 109 Court Street, Boston.

Int. 3. What knowledge or experience had you then relating to electricity and electrical apparatus?

Ans. What I had gained by nearly two years' practical experience in Mr. Williams's manufactory, making electrical instruments, and also by study of various works on electricity and telegraphy.

Int. 4. During the winter 1874–5, did Mr. Bell speak to you about any plans for the transmission of articulate speech? If so, what did he say to you about it, and how often did he speak to you upon the subject?

Ans. He did. On one occasion in January, 1875, he told me that he had plans by means of which he would cause a telegraph instrument to utter spoken words instead of making dots and dashes, and told me of an instrument he had devised for doing this. I do not remember how this instrument was to be constructed. At another time, within a month or two of the above date, he told me about an experiment he had made at Moses G. Farmer's laboratory, where he had connected a coil of wire in circuit with a galvanometer and moved a permanent magnet to and fro in front of the pole of the coil of wire, thereby causing the needle of the galvanometer to move from side to side as he moved the magnet.

Int. 5. Whether or not, during your connection with Mr. Bell, you assisted him in making experiments in addition to making apparatus?

Ans. I did.

3322

Int. 6. Do you remember using with him tuned reed receivers, substantially like that shown in the figures of his eighteenth answer?

Ans. I do.

Int. 7. Did you ever hear from a single one of such receivers tones of different pitches transmitted by transmitters of different pitch? If so, state how you used the receivers and whether you did this more than once, and state when you first did it.

Ans. I have heard such tones from one of these receivers, by pressing the reed against my ear. I did this many times during the winter of 1874–5, — certainly earlier than the middle of February.

[*Adjourned to July* 15, 1879, *at* 10 *A. M.*]

BOSTON, July 15, 1879.

Int. 8. Do you remember the experiment at Mr. Fenollosa's music rooms in May, 1875? If so, describe it.

Ans. I do. We had a line run between Mr. Bell's laboratory in Salem and the music room, in the next building. We arranged a current interrupter on the line in the laboratory and passed the intermittent current through the strings of a piano at the music room. I remained at the laboratory during the entire experiment. Mr. Bell was at the music room during the first part of the experiment, but came to the laboratory afterwards. He told me that he could not be sure whether he heard a musical note on the piano string or not. We then arranged a harmonic receiver on the line at the laboratory, and he directed some one at the music room to sound continuously one of the strings of the piano, while he listened at the receiving instrument. My impression is that the result of the second experiment was the same as the first. I do not think I was able to hear anything in the second experiment.

Int. 9. Do you remember the incident referred to by Mr. Bell in his deposition of your plucking a reed and thereby causing a receiver to sound, on June 2, 1875? And if so, please describe it.

Ans. I do perfectly. I do not remember the details of the connection, but we had a number of current interrupters and harmonic receivers arranged in circuit. Mr. Bell had charge of one station in one room, and I was in charge of the other station in an adjoining

3323

room. One of the reeds at my station would not vibrate, and on telling Mr. Bell, he called out to me to pluck it, which was a common way we had of starting a reed if it would not vibrate. This produced some effect at Mr. Bell's station that caused considerable excitement in his mind, as he immediately asked me what I had done, and desired me to do it again, which I did. He then showed me that the effect of this plucking was to produce a slight vibration in the receiving instrument at his station without a battery. We then changed the arrangement of circuit and instruments and tried it in various ways, getting the best results for two harmonic receivers in the same circuit with or without a battery.

Int. 10. Do you remember, at or about that time, vibrating a permanent magnet in front of the core of an electro-magnet? If so, describe that experiment and the results observed in it.

Ans. I do perfectly. We arranged an ordinary electro-magnet in circuit with a harmonic receiver and vibrated a horseshoe permanent magnet in front of the poles of the electro-magnet, and listening at the harmonic receiver could hear the musical note of the permanent magnet loudly.

Int. 11. Please look at the permanent magnet now shown you, and which is the one produced by Mr. Bell in answer to the seventy-third question. State whether it is or is not the permanent magnet referred to in your last answer and whether it is or is not in the same condition it was in when you so used it.

Ans. It is the identical magnet then used, but has since been mounted on a standard and painted.

Int. 12. When did Mr. Bell direct you to make the first membrane telephone you ever saw, and when did you make it?

Ans. June 2, 1875, the same day that the experiment noted in my ninth answer took place and immediately after it. I think I completed the instrument the next day, but certainly within three days.

Int. 13. Describe the first experiment you tried with it.

Ans. We had a line running from the attic of Mr. Williams's factory to the third story. In the attic we connected to this line the membrane telephone. In the third story we connected a harmonic receiver. I shouted into the membrane telephone. Mr. Bell

3324

listened at the receiver. I think he heard nothing. We changed places. He shouted at the telephone and I listened at the receiver. I could hear a faint sound. We were not able to use the instrument but a very short time, as the membrane got torn. I do not remember whether there was a battery in circuit or not, but I think we tried it both with and without.

Int. 14. Did you afterwards make a second membrane instrument, and if so, when?

Ans. I did; some time during the following month or six weeks.

Int. 15. Do you remember trying two membrane telephones, using one instrument as a transmitter and the other as a receiver? If so, state where such experiment was made and the results obtained in it.

Ans. I do. The experiment was made on the line described in my thirteenth answer. I think the results were a slight improvement on what we had previously obtained. My recollection of this experiment is confused with those that preceded, extending through the month of June, 1875.

Int. 16. Did Mr. Bell, at any time during the month of July, state to you the practical results which he expected to obtain by the use of apparatus similar in principle to the membrane telephones you have just spoken of; and if so, what did he state on that subject?

Ans. Yes, he told me, on June 2d, that he considered he had solved the problem of transmission of speech by the accidental discovery made on that day, of the effect produced by plucking the reed.

Int. 17. Did he, after the 2d of June, 1875, at any other time during that summer, speak to you of the practical results which would be obtained from the invention or discovery he had made? if so, how often did he speak to you about it?

Ans. During June and July, we experimented together almost daily. He was always confident that by utilizing the June 2d discovery he could not only transmit speech telegraphically, but could overcome the difficulties that prevented the practical use of a harmonic telegraph which he had been working on for the previous six months with my assistance.

Int. 18. Please look at the articles now shown you which are the

3325

same referred to in Mr. Bell's seventy-fourth and eighty-fourth answers, and state what they are.

Ans. They are portions of the first membrane telephones that I constructed for Mr. Bell. They are the base board and membrane rings of one, and the membrane rings of the other with the cross bar that supported the magnet — an electro-magnet and an armature.

Int. 19. Were the changes which were made, if any, in the month of June, 1875, in the uncovered leg and armature of the electro-magnet of the first membrane telephone correctly described in Mr. Bell's seventy-fourth answer? If not, state how your recollection differs from his, if at all.

Ans. They are correctly described in that answer.

Int. 20. Please look at the complainants' Exhibits 31 and 34, put in evidence in Mr. Bell's seventy-sixth and eighty-seventh answers. State whether they are or are not duplicates of the two original membrane telephones which you have spoken of and of which you have identified some of the parts. State also in what respects, if any, they differ from such original membrane telephones.

Ans. They are duplicates with the following exceptions: In Exhibit 31 the wooden framework is a little heavier, and the armature not so thick. In Exhibit 34 the framework is heavier, armature thinner, and a different method for adjusting the distance between the pole of the magnet and armature is supplied. In the original the adjustment was made by sliding the cross bar that supported the magnet up and down in the slots in the sides, as in Exhibit 31.

Int. 21. State how the armature Exhibit 33, and its mode of attachment to the pole of the magnet, compares with the armature and mode of attachment first used in the first telephone used in June, 1875.

Ans. I should say there is no essential difference. Exhibit 33 is about a sixteenth of an inch shorter, a thirty-second of an inch narrower, a thirty-second thicker, and the brass post by which it was attached to the membrane slightly longer and of greater diameter. The mode of attachment of the armature to the pole of the magnet is the same as used in that first experiment.

Int. 22. Please compare the armatures now on Exhibits 31 and 34 and their mode of attachment with the second armature which

you put on to the membrane telephone of June 2, 1875, and described by Mr. Bell in his seventy-fourth answer.

Ans. The armatures of Exhibits 31 and 34 are a little thinner, and the armature is pivoted to the pole of the magnet instead of being hinged with leather.

Int. 23. Please look at complainants' Exhibits 32 and 35 and state whether they are correctly described in Mr. Bell's seventy-sixth and eighty-sixth answers.

Ans. They are correctly described in those answers.

Int. 24. Have you tried to transmit articulate speech with the instruments, Exhibits 31, 32, 33, 34 and 35? If so, state when, where, and how, and with what results.

Ans. I have. On Saturday, July 5, 1879, I tried the membrane telephones, Exhibits 31 and 34, on a line between two parts of the building, 40 State Street, with the circuits arranged as in Mr. Cross's third answer, using the sheepskin diaphragms, Exhibits 32 and 35, and the heavy armatures, Exhibit 33 and another one like it, which I now produce. I carried on conversation with Professor Bell successfully, using three cells bichromate battery, the same that Mr. Cross described.

On Monday, July 7, I placed the instruments in circuit between the attic and third story of Mr. Williams's manufactory, under almost precisely the same conditions as the experiment of June 2, 1875. I could hear occasionally very faint sounds. The battery used was two large bichromate cells. We then carried the instruments to 40 State Street, and tested them again on the same circuit as on the 5th, with as good results as obtained that day. The experiments were made in the presence of Mr. Bell, Mr. Storrow, Mr. J. B. Henck, Jr., Dr. Clarence J. Blake and Mr. Berliner.

On the following Wednesday we tried the telephones at 40 State Street, with the goldbeater's skin diaphragms in place of the sheepskin diaphragms, and with thin clock-spring armatures, which are now on the exhibits. We succeeded in transmitting a few words, but I do not think the articulation was as distinct as with the thick diaphragms. The thin diaphragms also moistened, and became flabby very quickly.

[*Complainants put in evidence the heavy armature produced by the*

3327

witness, and it is marked "Complainants' Exhibit 47, Bell Telephone of 1875, Duplicate Heavy Armature, W. P. Preble, Jr., Examiner."]

Int. 25. Please state how the results which you obtained in the trials just mentioned compare with the results obtained in the trials of June and July, 1875. If there is any difference, state what, in your opinion, is the cause of it.

Ans. In the experiment of July 7, 1879, at Mr. Williams's workshop I do not think the results were any better, if as good, as those obtained in June or July, 1875, but the results obtained at 40 State Street, on July 5, 7 and 9, 1879, were decidedly better. The reason why the results were better at 40 State Street is, in my opinion, due to the fact that we were in a very quiet place, and that we were more practised in listening for faint sounds than in 1875.

Int. 26. Do you, in your experience, find that practice in the use of telephones enables a person to hear articulate speech from an instrument which without practice they cannot hear from. State what experience you have had on that subject.

Ans. In the experience derived from two years' work in practically introducing the telephone, I have found that it is almost invariably the case that a person listening to a telephone for the first time is unable to hear anything. The more powerful the transmitting instrument, the more readily do persons become expert in hearing the sound.

Int. 27. Whether or not you have found among persons who are not deaf and who have had some practice in the use of telephones any considerable difference in their ability to hear articulate speech from weak or imperfect telephones?

Ans. I have found a great difference.

Int. 28. Please look at the instrument now shown you, state who made it, what it was made for, and whether it was one of the instruments used in the experiments of June, 1875, and if so, state how it was then used.

Ans. I made it. It was made for a receiver for the harmonic telegraph that Mr. Bell was experimenting on during the winter of 1874–5. The whole of the instrument is not here. The reed and clamp are missing. It was used by clamping a reed on that pole of the electro-magnet to which the cross piece is attached, and allowing

3328

it to project over the other pole, but not in contact with it. The bobbin on the pole with the cross piece was put on in June, 1875, for the purpose of experimenting on the discovery made on the second day of that month.

Int. 29. How does it resemble the reed receivers which were used in the experiment of June 2, 1875, or that one which was used as a receiver with the first membrane telephone as a transmitter a few days afterward?

Ans. It is similar and I think the same instrument.

Int. 30. What are the two tall brass posts in line in front of the electro-magnet there?

Ans. They are portions of what Mr. Bell called his vibratory circuit breaker, which is shown in his patent of June 6, 1876.

Int. 31. How long is the core of the electro-magnet over which the free end of the reed projected?

Ans. About an inch and one quarter.

Int. 32. Will you please add to that instrument a reed and clamp such as were on it in June, 1875, in order that the whole may be put in evidence as an exhibit?

Ans. I will do so.

Int. 33. What was that blue coil on the leg which carries the clamp put on for, how was it used, and did you find any advantage in using it?

Ans. It was put on in order to ascertain the effect of magnetization of the reed by a local battery, the blue coil being connected directly with a battery and the other coil with the line wire. The battery current was continuous. On vibrating the reed, magneto-electric currents were induced in the coil connected to the main line. I do not exactly remember, but think it made no difference whether the battery was connected in the local coil or in the main line coil.

Int. 34. Did you know, in the fall of 1875, that Mr. Bell was preparing specifications for his patent of March 7, 1876? And if so, state what you knew about it.

Ans. I did. I remember hearing Mr. Gardiner G. Hubbard urging Mr. Bell to hurry in the preparation of that specification some time during the fall of 1875.

3329

Int. 35. Did you, during that fall or winter, hear why the filing of the specification was delayed?

Ans. I did. Mr. Bell told me that unless he applied for a patent in England before he did in the United States, he was liable to lose his English patent, and I also knew that he was making arrangements with some one to take out the English patent for him.

Int. 36. Please look at the exhibits now shown you, marked "38, 39, 40 and 41," put in evidence at Mr. Bell's one hundred and forty-fifth answer. State who made them and whether they were or were not exhibited at Philadelphia, at the Centennial Exhibition.

Ans. All four of the exhibits were made by me, and were exhibited at the Centennial. I knew they were going to be sent there, and I saw them there myself. The cone of the liquid transmitter, Exhibit 41, has been broken. The straight part that fitted into the transmitter is missing, and it has been mutilated by being converted into a gas stove by myself.

Int. 37. Was articulate speech transmitted by the liquid transmitter, Exhibit 41, before it went to Philadelphia?

Ans. I think it was. If not by that instrument, by a similar one.

Int. 38. Exhibit 42, Bell's memoranda of experiments 1876, are copies of the memoranda which he produced in his one hundred and forty-ninth and subsequent answers. Did you see those memoranda on or about the dates at which they were written?

Ans. I did.

Int. 39. Your name is mentioned in these memoranda in connection with a number of experiments. Were those experiments performed by you or with your assistance at or about the times of their respective dates?

Ans. They were.

Int. 40. Did you know about the other experiments at the time, and if so, how did you come to know about them?

Ans. I did. Mr. Bell told me of them, and showed me the notes.

Int. 41. Please look at the Exhibit 43, referred to in Mr. Bell's

one hundred and sixty-third answer. When was it made and first used, and for what purpose?

Ans. It was made on or about July 15, 1876, at Charles Williams, Jr.'s, workshop, and was intended to be used in the telephones Mr. Bell was using at that time. I know this from the fact that the shaft projecting from the back piece allowed it to be clamped in the ordinary holder in any of his telephones, and I also helped try it.

Int. 42. Mr. Bell, in his one hundred and sixty-fourth answer, speaks of the transmission of speech by telephone between Boston and Cambridge by the use of a permanent magnet and without a battery. Do you remember that occasion? And if so, describe the part that you took in it.

Ans. I remember the occasion perfectly. I was at the Boston end of the line, and I think the permanent magnet used was Exhibit 43.

Int. 43. Did you both listen and speak?

Ans. I did; at the same instrument.

Int. 44. Did you hear articulate speech when you listened?

Ans. I did, perfectly.

Int. 45. Where was the battery which was used in any part of that experiment, if any was used?

Ans. At the Boston end of the line in my charge.

Int. 46. Did you at any time transmit or receive speech over the line upon that occasion when the battery was cut off from the circuit?

Ans. I did.

Int. 47. Please look at complainants' Exhibit 45, referred to in Mr. Bell's one hundred and sixty-seventh to one hundred and sixty-ninth answers. State who made it and when it was made.

Ans. I made it during June, 1876, and tested it with Mr. Bell about the first of July.

Int. 48. Did you ever see it used as a transmitter for articulate speech; if so, when?

Ans. I did, and used it for a transmitter about the first of July, 1876.

Int. 49. Have you ever tried in the speaking telephone, for the transmission of articulate speech, diaphragms of different size and

3331

thicknesses? If so, what effect did those differences have on the sound heard at the receiving end?

Ans. I have tried such diaphragms. Keeping the thickness of the diaphragms constant and increasing the diameter above a certain size, causes what I term a drummy sound to accompany the articulation at the receiving end. Reducing the diameter causes a nasal sound at the receiving instrument. The same effects are produced by keeping the diameter of the diaphragms constant and decreasing and increasing the thickness.

Int. 50. Have you had any practical experience as to the effect of taking away in whole or in part the casing which, in the ordinary hand telephones, encloses the space immediately behind the diaphragm, and round the coil of the magnet? If yea, state what experience you have had on that subject, and what is the result of making that change.

Ans. I have. In the summer of 1877 I had some hand telephones made for practical use, with a portion of this casing removed. About twenty-five of these were sent out to our agents. I received complaints shortly after, that they did not work satisfactorily, on account of the holes back of the diaphragm, and that the agents were obliged to stop up the holes in order to make the instruments work successfully. I made a careful test myself, and saw that it would not do to leave the casing open, and had a number of telephones then in process of manufacture altered. In Indianapolis, in June of the present year, I was using a telephone in which our agent had made holes back of the diaphragm. Did not know at first that the holes were there, and was surprised at the difficulty with which I heard the voice of the distant speaker. On examining, I found what the trouble was. On stopping up these holes with my fingers I could hear much better. In my opinion, having the back of the diaphragm open would prevent the telephone from being used in many cases where there are outside noises, and I should consider that if two telephone companies were in competition, one using a closed diaphragm, and the other a diaphragm open at the back, the former company would have a great advantage over the latter company.

Int. 51. Please look at the instruments now shown you, marked

Complainants' Exhibits 15 and 16," referred to in Professor Cross's third answer. State whether they were made under your direction, and who made them.

Ans. They were made under my direction by Edward Wilson, one of Mr. Williams's workmen.

Int. 52. Where or how did you obtain directions as to the size of the instrument, of its armature, of its magnet, etc., as well as its general construction?

Ans. I made careful measurements of two instruments introduced as exhibits in Mr. E. S. Renwick's deposition in New York, and the instruments were constructed in accordance with these measurements.

Int. 53. What directions did you give the workman who made them?

Ans. I gave him rough drawings with the measurements marked on them. They were sufficient for him to work by.

Int. 54. Were the instruments 17 and 18, referred to in Professor Cross's fourth answer, made under your direction? If so, state what directions were given to you as to size, shape, arrangement, etc.

Ans. They were. A tracing of the drawings filed by Mr. Bell in the Patent Office, with his application for the patent of March 7, 1876, was given to me by counsel with a request that I should have made a pair of instruments exactly like those shown in the tracing, and of the same size. The drawing was given to Edward Wilson by me and he was directed to make the instruments, which he did.

Int. 55. Please look at the instruments 19 and 20, referred to in Professor Cross's fifth answer, and state whether they or any part of them were made under your direction, and where and how you procured the parts that were not made under your direction.

Ans. They were made under my directions, with the exception of the membranes and mouthpieces. The latter are the regular membranes and mouthpieces, known as the lovers' telegraph, which operate by a string stretched from one membrane to the other. I purchased them on the street during April or May of the present year.

Int. 56. Who made the parts that were made under your direc-

3333

tions, and what directions did you give him about making them and about the size of the parts?

Ans. Edward Wilson. I gave him the size of the core, coil and armature; told him how I wanted it fastened to the tin mouthpiece, and left the rest to his discretion.

Int. 57. What determined you in fixing upon the size of core, coil and armature which is found in these instruments?

Ans. I made them in the same general proportion as those represented in Mr. Bell's March 7, 1876, patent. I took no measurements.

Int. 58. Please look at the instruments, Exhibits 21 and 22, state whether they were made under your direction, and if so, what instructions were given you about making them.

Ans. They were made under my directions and were modeled after Exhibits 15 and 16, except as regards the method of adjusting the tension of the diaphragm and the omission of the slide, which carries the mouthpiece of 15 and 16.

Int. 59. Who made them and what directions did you give to the workmen about making them?

Ans. The mouthpieces were made by a tinsmith outside of Williams's shop, whose name I forget. The wooden rings were turned by a wood turner in Mr. Williams's employ, from a rough drawing which I furnished. The rest of the instruments were made by Oscar Ziegler, one of Charles Williams, Jr.'s, workmen. The latter worked from one of the instruments 15 or 16. The diaphragms were, I think, stretched by me.

Int. 60. Did you stretch any of these membranes except those of 21 and 22? if so, which?

Ans. I did not.

Int. 61. Of what material are these different membranes made?

Ans. The membranes of Exhibits 15 and 16, 21 and 22, are made of parchment such as is used for legal purposes. Exhibits 17 and 18 have membranes of goldbeater's skin. Exhibits 18 and 20 are, I think, made of bladder.

Int. 62. Please look at Exhibits 23 and 24. Were they made under your direction, and if so, what directions did you have about making them?

Ans. They were. I was told by counsel to make an armature attached to a diaphragm as represented in Mr. Bell's March 7, 1876, patent, that could be placed in an ordinary hand telephone, and I gave directions and a rough drawing to Edward Wilson, and he made the instruments.

Int. 63. What directions did you give about the size of the armature?

Ans. I do not remember, but it is my impression that I left it to Edward Wilson's discretion. The diaphragms are made of legal parchment.

Int. 64. Whether or not you had anything to do with making the telephones Exhibits 31, 32, 33, 34 and 35, that is, the duplicate telephones of 1875?

Ans. The instruments were not made under my directions, but were made while I was absent on a trip West.

Int. 65. State whether or not these instruments 15 to 22, inclusive, and 31 and 34, are made substantially in accordance with the specification of Mr. Bell's patent of March 7, 1876.

Ans. They are.

Int. 66. Did you take part in any or all of the experiments described in answers 3 to 10 inclusive of Professor Cross's deposition? If yea, state whether these answers give a correct account of the experiments you witnessed.

Ans. I was present at all those experiments, and I consider the answers correct accounts of the results obtained.

Int. 67. Please look at complainants' Exhibit 40, Bell's Centennial Iron Box Magnet Receiver, and state whether you know that that instrument, or one like it, was ever used as a transmitter of articulate speech, and if so, when for the first time.

Ans. I remember using this as a transmitter by placing my hand over an iron plate laid on the top of the tube and talking under my hand against this plate. This was some time during May, 1876. It was somewhere near the date of the presentation to the American Academy of the paper complainants' Exhibit 9. That paper appears to have been presented May 10, 1876. Mr. Bell was at the other end of the line listening at the receiving instrument.

[*Adjourned to Thursday, July* 17, 1879, *at* 10 *A. M.*]

3335

BOSTON, July 24, 1879.

Int. 68. In the memoranda of trials, Exhibit 42, near the end, I find a drawing of a box telephone, which is described as follows: —

"4. Instruments shown in Figure 3 were constructed somewhere about the 19th or 20th of October before Mr. Watson left for Philadelphia, and they are still the instruments preferred. The electro-magnet was placed in a box B, of wood. The front of the box was then cut away and a sheet of thin steel, A, was screwed on to it by screws *s*, *s*, *s*, *s*."

Do you remember making that instrument? and if so, when?

Ans. I remember, perfectly, making the instruments about the middle of October, 1876. I made two that were almost precisely similar.

Int. 69. When you first made them did you put in permanent magnets or simply soft iron cores without any permanent magnet?

Ans. I put in soft iron cores without any permanent magnet.

Int. 70. Did you ever change them by putting in permanent magnets instead of the soft iron cores? and if so, when?

Ans. I did; about the middle of November, 1876, I substituted for the soft iron cores in these two instruments hardened steel permanent magnets.

Int. 71. After the middle of November, 1876, did you habitually use for your regular trials and experiments and other uses of speaking telephones, instruments with permanent magnets, and without a battery, or instruments with soft iron core, electro-magnets and batteries?

Ans. I do not think we discarded the electro-magnets and battery altogether till about the first of December, but used one about as much as the other till that time.

Int. 72. Are you familiar with the various forms of telephone in practical use?

Ans. I am.

Int. 73. What kinds of telephones are in practical use which are not provided with a cover to inclose tightly the electro-magnet and back side of the diaphragm?

Ans. I know of none.

Int. 74. What kind of telephones are in practical use which are not provided with a perforated cover in front of the diaphragm, forming a thin chamber in front of the diaphragm, with an opening to speak into or to listen at?

Ans. I know of none.

Int. 75. Have you tried, in the speaking telephone, the use of an instrument which has a tube, of some considerable length, for the sound to travel through between the diaphragm and the operator, as compared with telephones in which the part in front of the disk is constructed like that part in complainants' Exhibit 25, Bell Hand Telephone?

Ans. I have.

Int. 76. What practical difference do you find with regard to the distinctness with which articulate speech is transmitted between these two forms?

Ans. I find there is no practical difference.

Int. 77. In the receiving instruments ordinarily used in speaking telephones, how close is the ear of the listener commonly placed to the diaphragm?

Ans. Rather less than half an inch.

Int. 78. Are there any speaking telephones in practical use in which, either in the transmitter or receiver, a diaphragm is placed in contact with or resting upon the pole of an electro-magnet?

Ans. I know of none.

Int. 79. What is the practical effect of having them in contact as compared with having them close to each other, but so that they never touch?

Ans. In all cases that have come under my observation, the instruments work so much more poorly when the diaphragm is in contact with the pole of the magnet as to render them impracticable for use and to necessitate readjustment.

[*Adjourned.*]

BOSTON, July 25, 1879.

Int. 80. Please look at the description of the trials of June 2, 1879, at No. 40 State Street, Boston, given in Dr. Blake's deposition in his eighth, ninth, tenth, eleventh and twelfth answers, and state generally whether that description is correct.

3327

Ans. I have looked at the description, and think it substantially correct, except that a good many sentences were transmitted, and other parties listened and talked besides Dr. Blake.

Int. 81. Please describe generally the construction, mode of operation and size of parts of the common Morse relays or sounders in common use.

Ans. A Morse relay consists of an electro-magnet, fastened to a base, having a lever pivoted at one end, to which is attached an armature of iron opposite the poles of an electro-magnet. This lever is pulled away from the electro-magnet by a spring, and its motion is limited by adjustable screws. The size of the parts varies greatly in different instruments. The length of the electro-magnet ranges from three fourths of an inch to four inches, the resistance from ten or less to three hundred or more ohms. The armature is usually about a sixteenth of an inch thick, half an inch wide, and an inch and a half long, with the lever two or three inches long. Its operation is as follows: When the key is depressed at the transmitting station, an electric current passes through the coil of the electro-magnet, which draws the armature towards the cores. When the current ceases, the spring draws the armature back.

Int. 82. Please describe the difference between such a relay and a polarized relay.

Ans. In a polarized relay the cores and armature are magnetized by being fastened to a permanent magnet, and the retractile spring is usually omitted. It is usually operated by reversing instead of merely making and breaking the electric current. The armature is pivoted to one pole of the permanent magnet, and its free end plays between two prolongations of the cores of the electro-magnet. The length of the armature varies from an inch and a half to four inches, the length of the cores from about one inch to two inches and a half. These dimensions are of instruments that have come under my observation, but they are sometimes made greater or less. I believe that in some instruments the armatures and cores are polarized by a battery and coil instead of a permanent magnet, but the effect is the same in either case.

Int. 83. Are you acquainted with any electric bell in practical use, in which the moving portion consists of a lever pivoted at one

3338

end, and acted upon by an electro-magnet through the coils of which an electric current is passed? And, if so, describe it and the size of its parts.

Ans. I am. The lever is about five inches long, and consists of a strip of iron about three inches long, one eighth thick, three eighths wide. This iron has attached to one end a wire about two inches long, with a metal ball on its end to strike the bell. The armature is pivoted at the other end on one pole of a permanent magnet, and plays between the two cores of an electro-magnet, which is fastened on the other pole of the permanent magnet. The current which actuates this armature is a reversed current produced by a small dynamo-electric machine. The effect of the current is to cause the armature to move rapidly to and fro, having an amplitude of motion of a quarter of an inch. This apparatus is an ordinary form of what is called a magneto-bell.

Int. 84. Please state how rapidly the vibrating lever is caused to move in the ordinary operation of the instruments you have described, specifying as to each.

Ans. I should say about ten times per second; but it can be made to move more rapidly.

Cross Examination by CAUSTEN BROWNE, Esq., *of Counsel for Defendant.*

Cross-Int. 85. Describe what you mean by the harmonic receiver which was arranged on the line on the experiment at Mr. Fenollosa's music rooms in 1875, as mentioned in your eighth answer?

Ans. It consisted of an electro-magnet made by attaching a round core of soft iron, with a coil of wire round it, to one end of an L-shaped piece of iron, and to the other end of this piece of iron was clamped a piece of spring steel, projecting over the end of the core about an inch and a half long, five eighths wide and a fifteenth of an inch thick.

Cross-Int. 86. In the making of the various membrane-speaking telephones for experiment or for use as exhibits in this case, from the time that your employment with Mr. Bell began until now, what has been the course of proceeding as to the membranes to insure their having in the instrument the requisite stiffness and elasticity?

3339

Ans. They were moistened, stretched over the ring upon which they were to be mounted, in the instrument when in a moist condition, as tightly as possible and tied with a string or wire.

Cross-Int. 87. Was anything else done to them?

Ans. Nothing, except to let them dry and attach the magnet, and on one occasion I gave directions to have them shellacked, in order to prevent their absorbing moisture from the breath. The only membranes that were shellacked are Exhibits 23 and 24, 17 and 18.

Cross-Int. 88. Why did not the others require to be shellacked for the same purpose?

Ans. Those that were shellacked were so treated to see if any benefit arose from it, and as no necessity arose for talking to the instruments any length of time I did not have the others shellacked. Some of them were made before the idea struck me of shellacking the diaphragm.

Cross-Int. 89. The other instruments were, if I understand you, not subjected to any use which showed the necessity of shellacking, — showed no imperfection in working which might be remedied by shellacking, — did they?

Ans. Yes; I think all of the instruments would have been improved if they had been shellacked, as it would have prevented their absorbing moisture, which I have always found has been an imperfection.

Cross-Int. 90. How long do you think a stretched membrane could be exposed to the moisture of the human breath by actual use in talking against it without becoming flabby so as to require to be replaced or restretched?

Ans. I think it would become somewhat flabby in rather less than half an hour.

Cross-Int. 91. I mean flabby to that degree to render it unsuitable for use in the instrument.

Ans. It depends upon the material of which the membrane is composed. With a legal parchment diaphragm, which is as good as anything, I should say that one hour's constant use would render it inoperative.

Cross-Int. 92. How would it be with goldbeater's skin?

Ans. It would become useless very much more quickly.

Cross-Int. 93. When the membrane gets to this useless condition of flabbiness, what is to be done? Does the instrument require a new one, or can you restore the old one to its efficiency, and how?

Ans. If it is provided with a means of adjustment, it can easily be tightened. If there are no means of adjustment, it is sufficient to let it dry, and it will then work as before.

Cross-Int. 94. And while it is drying you must get along without using the telephone, I suppose?

Ans. Certainly. It is necessary, in order to have it dry, to stop speaking to it.

Cross-Int. 95. In some of the experimental or exhibit membrane telephones which have been put in evidence in this case the armatures are heavier than in the others. What do you understand to be the rule in the construction of membrane telephones, such as are supposed to be shown in the Bell patent of 1876, for determining within reasonable limits the weight of the armature for a membrane of one or another diameter, thickness or material?

Ans. I have no rule. The first armature, Exhibit 33, is about the size of the armature of an ordinary Morse relay, and I think I followed the relay as a model. I have found, however, that it makes very little difference, within reasonable limits, what the weight of the armature is.

Cross-Int. 96. Now please state what you understand by reasonable limits, outside of which it will make a difference.

Ans. I should expect to get good results out of an armature a sixteenth of an inch wide, one sixty-fourth thick and an inch or two in length, and also from one two inches wide, a quarter of an inch thick and the same length or longer; the length of the armature to be a little greater than one half the diameter of the membrane to which it is to be attached.

Cross-Int. 97. Using, I suppose you mean, for each of these armatures one and the same membrane?

Ans. If the membrane was as large and thick as in Exhibits 32 and 35, any of these armatures could be used with good results. I do not think the difference in the results would be very great.

Cross-Int. 98. I suppose you mean that ordinarily a membrane

3241

large and thick enough to actuate a heavy armature will actuate a light one practically well?

Ans. That has been my experience.

Cross-Int. 99. Now, as to the converse. A membrane thick and strong enough to properly actuate a light armature will not for that reason answer for a heavy armature, will it?

Ans. There is such a thing as getting an armature too heavy for a membrane, and I do not think the diaphragm of Exhibits 17 and 18, Baby Telephones, would actuate the heavy armature, Exhibit 33, while it might actuate one twice as heavy as that now attached to it.

Cross-Int. 100. Is there any way of determining beforehand the weight of the armature to be used relatively to the thickness and size of the membrane desired to be used?

Ans. I have no way, and know of none.

Cross-Int. 101. Do you know what conditions about a membrane affect or determine what is known as its fundamental rate of vibration?

Ans. I think the diameter, thickness, and material of which the membrane is composed determine the fundamental of the membrane.

Cross-Int. 102. Does its degree of tension also enter into the question?

Ans. It does.

Cross-Int. 103. Do you know what is the effect of subjecting a metallic diaphragm to tension as to its efficiency for the purposes of a speaking telephone?

Ans. I do, I think.

Cross-Int. 104. What is it?

Ans. If the tension is that produced by hammering the metallic diaphragm into a concave form, it does not work as well as if it were flat. If simply stretched laterally, I do not think it would make any difference. But if a metallic diaphragm is clamped very tightly, the transmitted speech is sometimes accompanied by overtones. This does not by any means render the instrument inoperative.

Cross-Int. 105. What effect does it have upon the transmitted speech?

3842

Ans. It causes a disagreeable overtone to accompany the voice in the receiving instrument.

Cross-Int. 106. Has this accompanying overtone no effect upon the distinctness of the sound or articulation to the listener's ear?

Ans. If very strong, it renders the articulation somewhat indistinct; but if slight, it is not noticeable.

Cross-Int. 107. Upon what conditions of the clamped diaphragm does it depend whether the accompanying overtone be strong enough to make the articulation indistinct or not?

Ans. If the diaphragm is clamped very strongly between two metal surfaces the overtone is stronger than if it is clamped loosely, but I have found where a telephone is very indistinct that it is due to some imperfection in the diaphragm, such as a dent or a warp.

Cross-Int. 108. Is Mr. E. L. Wilson, who has testified for the complainants here, in the employment of Professor Bell?

Ans. He is not.

Direct Examination resumed.

Int. 109. In making the experimental instruments constructed by you or under your direction since the 1st of April of this year, as stated in your direct examination, did you or did you not change the armatures after the instruments were first made and tried?

Ans. I did not change any of the armatures.

[*Complainants put in evidence the harmonic receiver referred to by the witness above and taken by him for additions, and it is marked "Complainants' Exhibit* 48, *Bell's Harmonic Receiver, W. P. Preble, Jr., Examiner.*"]

THOMAS A. WATSON.

Attest: W. P. PREBLE, Jr., *Examiner.*

DEPOSITION OF WILLIAM H. HUBBARD.

BOSTON, July 21, 1879.

Direct Examination by J. J. STORROW, Esq., *of Counsel for Complainants.*

Int. 1. Please state your name, age, and residence.

Ans. William Hammond Hubbard; age, is twenty-one; reside in Chicago; have just graduated from college.

3543

Int. 2. Did or did not Mr. Bell say anything to you in the summer of 1875 about the transmission of articulate speech by electricity; and if so, what did he say?

Ans. Mr. Bell did speak about the transmission of speech, and he said he hoped to accomplish it. This was in the latter part of June, 1875, when I was being examined for entrance to college, and the examinations were on the 1st, 2d and 3d of July.

Int. 3. Did you have any conversation with him on that subject in the autumn of 1875: and if so, how did he express himself about it?

Ans. I did. He was very enthusiastic about it. He told me of different experiments he had made, and that he was working continually to transmit vocal sounds.

Int. 4. Did you go to the Centennial Exhibition in 1876? If so, for what special purpose?

Ans. I did, on receiving a telegram from Mr. Bell asking me to come immediately.

Int. 5. Did you assist him at the exhibition which he made before the judges, Sunday, June 25; and if so, how long before that did you arrive in Philadelphia?

Ans. I did assist him. I arrived there at midnight, Saturday, June 24.

Int. 6. Please look at the exhibits now shown you, marked "38, 39, 40 and 41." State whether any of them, and if so, which of them, were exhibited on that occasion.

Ans. All of them were exhibited on that occasion.

Int. 7. Which of them were used for the transmission of speech on that occasion?

Ans. 38, 39 and 40.

Int. 8. Whether or not any reference was made by Professor Bell to Exhibit 41, liquid transmitter, on that occasion; if so, what?

Ans. In his explanation to the judges of his instrument, he showed them that one and explained its use, but did not exhibit it in operation for lack of time.

Int. 9. When did Mr. Bell leave Philadelphia after that exhibition?

Ans. The same evening; I think at nine o'clock.

Int. 10. Did Mr. Elisha Gray call on Mr. Bell while you and Mr. Bell were together on that day; if so, where was it, and was it before or after the exhibition before the judges?

Ans. He did. In our room at the Grand Villa Hotel, in the afternoon after the exhibition.

Int. 11. Did or did not Mr. Gray at that interview say, in substance, that he had invented a speaking telephone?

[*Objected to as incompetent.*]

Ans. Mr. Gray did not.

Int. 12. After Mr. Bell left Philadelphia, did you exhibit his speaking telephones to the judges; if so, when and where?

Ans. I did, at the request of Sir William Thomson; in the judges' hall, Monday, June 26, in the evening.

Int. 13. Please describe that exhibition; state what apparatus was used, what part you took in it, and what part the judges took in it.

Ans. On Monday morning the apparatus was all moved to the judges' hall; the receiving instrument was placed in the central hall, the transmitting instrument in one of the private rooms; proper connections were made between the instruments. I explained to the judges the use of the different instruments, then I went to the transmitting instrument and spoke to them at the receiving instrument. They heard me, and were so much pleased that Professor Watson took one of the New York papers and read extracts from it to Sir William Thomson and the other judges. They understood him perfectly. Those experiments lasted from about seven to half past nine, and during most of the time the judges were making their own experiments with them.

Int. 14. Please look at the letter now shown you, dated July 20, and referred to in Mr. Bell's one hundred and forty-sixth answer. State whether or not it is addressed to you, and when and where you received it.

[*Objected to.*]

Ans. This letter is addressed to me. I received it in Philadelphia; I think on the 5th of July, 1876.

Int. 15. The letter refers to instruments to be used between

Boston and Philadelphia. What experiments did you expect to try over the line from Boston to Philadelphia at that time?

Ans. We expected to transmit speech by means of the instruments referred to from Boston to Philadelphia.

Int. 16. Did you make the experiment; and if not, why not?

Ans. We did not. I could not get in Philadelphia wire fine enough to make the instruments necessary.

WM. H. HUBBARD.

Attest: W. P. PREBLE, Jr., *Examiner.*

DEPOSITION OF J. B. HENCK, JR.

BOSTON, July 24, 1879.

Direct Examination by J. J. STORROW, Esq., *of Counsel for Complainants.*

Int. 1. Please state your name, age, residence, and occupation.

Ans. John Benjamin Henck, Jr.; twenty-four; Boston, Mass.; assistant in Physics, Massachusetts Institute of Technology.

Int. 2. Have you read the answers of Professor Cross to Ints. 2 to 11 inclusive, beginning on p. 382 of the record?

Ans. I have.

Int. 3. Did you assist him in the trials therein described? Is his description of them and the statement of their results given in those answers correct, so far as they came within your observation?

Ans. I did. The answers and statements are correct so far as I know.

Int. 4. Did you during those experiments transmit speech from the end at which you were stationed, or did you receive it or both?

Ans. Both.

Int. 5. Did you on the 7th of July, of this year, witness or take part in any trials at Mr. Williams's workshop, and at 40 State Street, with the membrane telephones 31 and 34, mounted with the sheepskin diaphragms 32 and 35, and the heavy armatures 33 and 47? And if so, describe those experiments.

Ans. I arrived at the workshop of Mr. Williams on the day named, while experiments were in progress with the instruments

3548

named, and while Mr. Bell spoke in an upper room, I listened to the other instrument, but could understand nothing of what he said. The instruments were then taken to No. 40 State Street, and the experiments were repeated, and there I was able to understand something of what was said, but not all.

Int. 6. What was the condition of the membrane of the instrument at your station, at 40 State Street, as to its being moist or flabby at the time when you listened?

Ans. I did not examine the membrane, but as the instrument had been used as a transmitter by several persons before I listened to it and had been carried from Mr. Williams's shop through the rain, it is reasonable to suppose that it was damp and therefore not in good condition for use.

J. B. HENCK, JR.

Attest: W. P. PREBLE, JR., *Examiner*.

DEPOSITION OF C. J. BLAKE.

BOSTON, July 25, 1879.

Direct Examination by J. J. STORROW, Esq., *of Counsel for Complainants.*

Int. 1. Please state your name, age, residence, and occupation.

Ans. Clarence J. Blake; age, thirty-six; Boston, Mass.; physician; lecturer on Otology in Harvard University, aural surgeon in Massachusetts Eye and Ear Infirmary.

Int. 2. Please look at the drawing, Exhibit 30, Dr. C. J. Blake Drawings. State when, where and by whom they were made, and in whose custody they remained after they were made.

Ans. October, 1874; at my office, in Hotel Berkeley, Boston; by Alexander Graham Bell, and remained in my possession.

Int. 3. Did Mr. Bell, at that time, describ eto you any apparatus for the transmission of sound by electricity? If so, please repeat the description he gave you of the apparatus and the mode in which it was to operate, and the character of the sounds which he intended to transmit by it.

Ans. He did describe an apparatus consisting of a metal reed set in vibration in front of a magnet as part of an organ pipe. Also an

3347

apparatus consisting of a metal reed set in vibration in front of a magnet and coil, and also an apparatus consisting of a metal reed set in vibration between two magnets and coils, and also an apparatus consisting of a series of metal reeds which might be set in vibration in response to a musical instrument or the human voice. The idea of this latter apparatus was that the metal reeds of different lengths would respond to the different tones of a musical instrument or of the human voice.

Int. 4. Did he describe to you any electrical apparatus in which a membrane was to be used? If so, please tell me what that apparatus was.

Ans. Yes; an apparatus in which one metal reed was substituted for the several metal reeds of the harp last mentioned, this one reed being actuated by a membrane to which it was to be attached, which membrane was to be set in vibration by the tone of the musical instrument or by the human voice.

Int. 5. Did you have any discussion with him as to the character of the membrane, or mode of arrangement of the membrane and armature? And if so, state what was said on that subject at that interview by both of you.

Ans. Yes; the idea of Professor Bell as communicated to me was this: That if the simple pendulous vibration of a metal reed could be communicated to a second reed electrically connected with the first, more complicated vibrations communicated to the metal reed from a musical instrument, or the human voice through the medium of the air, could also be electrically transmitted. To accomplish this purpose, it was, according to his idea, advisable to attach the metal reed to a membrane, which would reproduce the aerial vibrations produced by a musical instrument or the human voice, substituting a metal reed in fact for the stylus of the improved Morey Phonautograph, and of the Membrana Tympani Phonautograph with which he had been experimenting. I then suggested as an experiment, since his principal object was the electrical transmission of articulate speech, that the metal reed should be brought in contact with the human membrana tympani suitably prepared and mounted for the purpose.

Int. 6. What did you conceive to be the advantage of using a

membrane consisting of the human membrana tympani instead of parchment or sheepskin, or other kind of membrane, in such an apparatus as he described for the electrical transmission of articulate speech?

Ans. The fact that the human membrana tympani responds to a wider range of musical tones than any artificially prepared membrane, and that it has been specially adapted by nature to respond in vibration to the human voice.

Int. 7. Did you make a transmitting and receiving instrument of a speaking telephone, using the membrane of a human ear?

Ans. At that time the experiment was not tried. We were unwilling to dismount the membrana tympani which we were then using as a phonautograph. But I have since constructed a human membrana tympani telephone, with which articulate speech was electrically communicated in March, 1878.

Int. 8. Please look at the instruments now shown you, marked "Complainants' Exhibits 15 and 16, Membrane Telephone No. 2," " Exhibits 17 and 18, Baby Membrane Telephones, 19 and 20, Lover's Electric Telephones." State whether you have witnessed the transmission of articulate speech by them or any of them; if so, state when and where, and with what results.

Ans. Yes. Afternoon of June 2, 1879. Office of Mr. Storrow, 40 State Street, Boston. I heard distinctly a sentence spoken by Mr. Watson, using Exhibit 15, with Exhibit 16 as a receiver; also Exhibit 17, using Exhibit 18 as a receiver; also Exhibit 19, using Exhibit 20 as a receiver.

Int. 9. To save time I will ask you whether the general arrangement of the two stations and the circuit was the same as that described in Professor Cross's third answer, page 383?

Ans. It was.

Int. 10. Did you use any of these instruments to transmit from the station where you were to the other station; if so, which?

Ans. Yes. Exhibits 19 and 20 transmitted both ways.

Int. 11. Why did you not attempt to transmit both ways by the others?

Ans. Because the cone of the receiving instrument was not adapted to transmission.

3349

Int. 12. State whether or not the instruments at that trial transmitted articulate speech well enough to be of any practical utility.

Ans. They did.

Int. 13. State whether or not at that trial you found that the instruments were affected by continuous use for any length of time, and if so, whether they were affected favorably or unfavorably, and what particular change took place in them in consequence of continued use of the transmitter.

Ans. They were unfavorably affected in consequence of the relaxation of the membrane, due to the absorption of moisture from the breath in speaking into the instrument.

Int. 14. Please look at the complainants' Exhibits 31 and 34, Bell Telephone of 1875, and state whether you took part in a trial of them on the 7th of July, 1879, when they were mounted with the sheep skin membranes, Exhibits 32 and 35, and the heavy armatures 33 and 47. If so, describe those trials, and state where they took place.

Ans. I did. First, in the workshop of Charles Williams, Jr., at 109 Court Street, Boston. The receiving instrument being in the workshop, and the experiments being conducted while the usual work of the shop was going on. I am not certain of having heard any sound through the instrument. Second, with the same instruments, immediately after the first trial, the experiment was repeated in the office of Mr. Storrow, and articulate speech was distinctly heard with the receiving instrument.

[*Cross examination waived.*]

CLARENCE J. BLAKE.

Attest: W. P. PREBLE, Jr., *Examiner.*

DEPOSITION OF E. L. WILSON.

BOSTON, July 24, 1879.

Direct Examination by J. J. STORROW, Esq., *of Counsel for Complainants.*

Int. 1. Please state your name, age, residence, and occupation.

Ans. Edward L. Wilson; twenty; Boston, Mass.; mechanic.

3350

Int. 2. Look at complainants' Exhibit 45, Bell's Speaking Telephone Metallic Diaphragm. State, if you know, when it was made.

Ans. In the summer of 1876.

Int. 3. Did you during that summer assist Mr. Bell in any telephonic experiments in which that Exhibit 45 was used?

Ans. Yes, I assisted him in trying it after it was made at Exeter Place, Boston, as a receiver and as a transmitter.

Int. 4. How did you use it as a transmitter?

Ans. By speaking to this iron diaphragm and covering it as much as possible with the hands, so as to form a mouthpiece with them.

Int. 5. Please look at complainants' Exhibit 43, Bell's Permanent Magnet of 1876. State when it was made.

Ans. It was made in July, 1876.

Int. 6. State when you first knew of its use in a speaking telephone.

Ans. About that time. As soon as it was made we tried it.

Int. 7. Please look at complainants' Exhibits 15 and 16, Membrane Telephone No. 2, and state whether you made them, and if so, what parts were made by you or under your directions.

Ans. Every part was made by me except the iron cones and the winding of the coils, which were done under my direction.

Int. 8. Who gave you the directions according to which you worked?

Ans. Mr. Watson.

Int. 9. What directions did he give you as to size and arrangement of parts?

Ans. He gave me a drawing containing the length of the cones, thickness and length of the core, the size of the iron used in making the right-angled back piece, the armature, the cones that connect the armature with the diaphragm, and the resistance of the coils; and told me what parchment to get for the diaphragms.

Int. 10. Was he present while you were making them?

Ans. No.

Int. 11. Did you stretch the diaphragms?

Ans. Yes.

Int. 12. What instructions did he give you as to any particular manner of stretching them?

Ans. None.

Int. 13. Please look at complainants' Exhibits 17 and 18, Baby Membrane Telephones; state whether you made them or had them made under your direction, and from whom you received your instructions about making them.

Ans. I made them. A tracing was given me — a drawing — by Mr. Watson, and he told me to make them as near the size of the drawing as possible.

Int. 14. What directions did he give you about the size of the core and the resistance of the coil?

Ans. He gave me no directions about the size of the core, only to make it the size of the core in the drawing. He told me to have the spool filled with a certain size wire. I don't remember what size.

Int. 15. What directions did he give you as to size and shape of the armature?

Ans. He told me to make the armature as wide as the iron back piece, to which it is hinged.

Int. 16. What directions did he give you about the width of the iron back piece?

Ans. He gave me the width, and the thickness I got by the drawing.

Int. 17. Did you stretch the membranes on them?

Ans. Yes.

Int. 18. What directions did he give you about the membranes or about the manner of stretching them?

Ans. He told me what to use for a membrane; and I tied it on with a piece of string.

Int. 19. Please look at the complainants' Exhibits 19 and 20, Lover's Electric Telephones; state what parts of them you made, and from whom you received your directions.

Ans. I made every part except the mouth piece, the spool and the stretching the diaphragms. The diaphragms were on when they were brought to me by Mr. Watson, who gave me my directions.

Int. 20. What directions did he give you as to size of core and resistance of coil?

Ans. He gave me the size of the core, the diameter and length of the coil, the resistance of the coil, and told me to make the rest similar in shape to those made before, and to use my own judgment about the thickness of the back piece and armature. He did tell me something about the armature. I had some iron one sixteenth of an inch thick and half an inch wide. I asked him if that would do. He said it would.

Int. 21. Please look at the complainants' Exhibits 23 and 24, Hand Telephone Membranes. State whether you made any part of them; if so, what part.

Ans. I made the hinged armature and the brass cone that connects it with the diaphragm.

Int. 22. Where did you get the wooden ring?

Ans. It was brought to me by Mr. Watson.

Int. 23. What directions did you receive as to the size and shape of the armature, and from whom did you receive such directions?

Ans. Mr. Watson gave me a drawing, with the shape he wished to be made, the thickness and width of the iron.

Int. 24. How do the thickness and width of the armatures of 23 and 24 compare with the thickness and width of the armatures of 19 and 20?

Ans. I think the armatures of 23 and 24 were made before those of 19 and 20. They are both made of the same iron.

Int. 25. Who stretched the diaphragms on 23 and 24?

Ans. I did.

Int. 26. What directions did you have about stretching the diaphragm?

Ans. He told me to stretch them the way I always had done, and shellac them, to prevent their becoming loose from being spoken to.

[*Adjourned to July* 25, 1879.]

3353

BOSTON, July 25, 1879.

Cross Examination by CAUSTEN BROWNE, Esq., *of Counsel for Defendant.*

Cross-Int. 27. Have you been employed by any one at any time in or about the making of telephones besides the work you did in making the particular telephones mentioned in your direct examination?

Ans. No, I have not.

Cross-Int. 28. What has been your employment during the last three or four years?

Ans. I have been employed in assisting Mr. Bell, and in the factory of Charles Williams, Jr.

Cross-Int. 29. Mr. Charles Williams, Jr., manufactures the Bell telephones, doesn't he?

Ans. Yes.

Cross-Int. 30. What is the nature of your employment in his place?

Ans. Working upon different kinds of electrical work.

Cross-Int. 31. How long have you been in Mr. Williams's employment?

Ans. About two and a half years.

Cross-Int. 32. Do you mean to be understood by your first answer this morning that you have never done any work on telephones at Mr. Williams's place until you made the exhibit telephones by Mr. Watson's directions, as mentioned in your direct examination?

Ans. I have done a very little work on our regular instruments, the Bell telephones.

Cross-Int. 33. Did you make Exhibit 45, or any part of it?

Ans. No, I did not.

Cross-Int. 34. I suppose that prior to making and completing the exhibit telephones in pursuance of Mr. Watson's directions, you had seen no models of any telephones, had you?

Ans. Yes, I had.

Cross-Int. 35. Any except those that you had had to do with while working under Professor Bell?

Ans. No.

3357

Cross-Int. 36. How long did you work under him?

Ans. About two months.

Cross-Int. 37. When was it?

Ans. In the summer of 1876.

Cross-Int. 38. What telephones or parts of telephones having stretched membranes had you seen before you made the exhibits by direction of Mr. Watson, as testified yesterday? I mean, of course, electric telephones.

Ans. None except those used by Mr. Bell, in the summer of 1876, and I have seen them since lying around.

Cross-Int. 39. Do you mean the same ones you saw in 1876 or other stretched membrane telephones?

Ans. I suppose they were the ones used by Mr. Bell. There were very few of them.

Cross-Int. 40. How many do you remember altogether, first and last?

Ans. There may have been fifteen or twenty.

Cross-Int. 41. Did you have anything to do with the making of any of them, or with any alteration or repairing of any of them?

Ans. I had nothing to do with the making of them, but have put on several new membranes.

Cross-Int. 42. Have you not assisted Professor Bell in some of his experiments since the summer of 1876?

Ans. Not that I remember.

Cross-Int. 43. Is the whole of your employment at this time with Mr. Charles Williams in this city?

Ans. No; I am in the employ of the Bell Telephone Company.

Cross-Int. 44. In what capacity?

Ans. Starting telephonic exchanges, — starting the apparatus and teaching the operators.

Cross-Int. 45. Is Mr. Charles Williams, Jr., the sole manufacturer of the Bell telephones?

Ans. I think he is, at present.

Cross-Int. 46. Your work in starting telephonic exchanges is done at different distant towns, is it not?

Ans. Yes; wherever I am sent by the company.

3055

Cross-Int. 47. How long have you been on this duty of starting telephonic exchanges?

Ans. About one month.

Direct Examination resumed.

Int. 48. Are these instruments the Philadelphia Centennial Telephones 38, 39 and 41, among those which you say you have seen?

Ans. Yes.

E. L. WILSON.

Attest: W. P. PREBLE, Jr., *Examiner.*

DEPOSITION OF EMILE BERLINER.

BOSTON, July 25, 1879.

Direct Examination by J. J. STORROW, Esq., *of Counsel for Complainants.*

Int. 1. Please state your name, age, residence, and occupation.

Ans. Emile Berliner; twenty-seven years old; Boston, Mass.; assistant of the National Bell Telephone Company.

Int. 2. Did you give directions for making Exhibits 31, 32, 33, 34, 35 and 47; if so, to whom did you give them?

Ans. I did; to Oscar Ziegler, a workman of Mr. Williams.

Int. 3. What samples, description or drawing did you give him by way of directions or instructions?

Ans. I gave him the parts described in Mr. Bell's seventy-fourth and eighty-fourth answers, and also one other cross bar like that on Exhibit 34, and the large drawing of a telephone taken from Mr. Bell's preliminary statement in the speaking telephone interference.

Int. 4. Did you afterwards have the second set of diaphragms and light clock-spring armatures constructed which are on Exhibits 31 and 34; and if so, who constructed them and what directions did you give him about them?

Ans. I directed Oscar Ziegler to make the two diaphragms on the exhibits, with watch-spring armatures attached, and told him to stretch them in the same manner as he had always done.

Int. 5. Did you do any of the work on those instruments yourself?

3356

Ans. No, except assisting him to put the parts together. I tied the string on one of the diaphragms.

Cross Examination by CAUSTEN BROWNE, Esq., *of Counsel for Defendant.*

Cross-Int. 6. You say, "I directed Oscar Ziegler to make the two diaphragms on the exhibits, and watch-spring armatures attached, and told him to stretch them in the same manner as he had always done." What did you know as to what he had done previously about stretching membrane diaphragms?

Ans. I had seen him at work on speaking telephones which also had membrane diaphragms, and concluded that he knew all about it.

Cross-Int. 7. You are the inventor of some improvements of the speaking telephone which are in interference with some applications owned by the American Speaking Telephone Company, are you not?

Ans. Yes.

Cross-Int. 8. Have you a pecuniary interest in the success of those interferences?

Ans. I have.

Direct Examination resumed.

Int. 9. Do the inventions referred to in the seventh cross-interrogatory relate to instruments in which a stretched membrane is used for a diaphragm?

Ans. No, not in the shape as they are now used.

EMILE BERLINER.

Attest: W. P. PREBLE, Jr., *Examiner.*

DEPOSITION OF J. OSCAR ZIEGLER.

BOSTON, July 25, 1879.

Direct Examination by J. J. STORROW, Esq., *of Counsel for Complainants.*

Int. 1. Please state your name, age, residence, and occupation.

Ans. Jacob Oscar Ziegler; twenty-seven; Malden, Mass.; machinist, and work for Charles Williams, Jr.

3567

Int. 2. Did you make the complainants' Exhibits 21 and 22, Adjustable Membrane Telephones? If so, state who gave you directions about making them.

Ans. These two I made. Mr. Watson gave me the directions for them.

Int. 3. State what parts of them you made by your own hands, and what parts you had made by other workmen.

Ans. The two sheet iron cones were made outside. The two wooden bases were made in the cabinet shop. The wooden rings over which the membranes are stretched were made by the wood turners. I did all the rest of the iron work. The spools I got wound by the coil winders in the shop.

Int. 4. Did you have any model or sample to make them by; and if so, what?

Ans. I had Exhibits 15 and 16 to work by.

Int. 5. Did you stretch the membranes on 21 and 22?

Ans. No, sir. I did not do it myself. I don't know who did.

Int. 6. Did you make the instruments 31, 32, 33, 34, 35 and 47?

Ans. Yes, sir.

Int. 7. Who gave you the directions about them?

Ans. Mr. Berliner.

Int. 8. If you had any parts or samples or drawings to make them by, please point them out on the table.

Ans. I had the parts now shown me [*those produced by Mr. Bell in his seventy-fourth and eighty-fourth answers*], and another cross bar like that on Exhibit 34.

Int. 9. Did you stretch the four diaphragms, namely, the two sheepskin diaphragms 32 and 35, and the goldbeater's skin diaphragms that are now on 31 and 34?

Ans. Yes, sir.

Int. 10. Did you, after the instruments were first made, take off the heavy armatures 33 and 47 and replace them by the clock-spring armatures which are now on 31 and 34?

Ans. Yes, sir.

Cross Examination by CAUSTEN BROWNE, Esq., *of Counsel for Defendant.*

Cross-Int. 11. By whose direction did you change the armatures as just mentioned?

Ans. By Mr. Berliner's direction.

Cross-Int. 12. Had you ever made any stretched membrane telephones before making those mentioned in your deposition today?

Ans. Yes, sir. I made several of them.

Cross-Int. 13. When? How long ago?

Ans. It is impossible for me to tell what date I made them. About a year or a year and a half ago, I should think.

Cross-Int. 14. You say there were several of them. State how many there were.

Ans. As to the number, I couldn't say exactly.

Cross-Int 15. Say as nearly as you can how many there were.

Ans. About two or three pairs, I believe.

Cross-Int. 16. By whose directions did you make them?

Ans. I made them by Mr. Watson's directions.

Cross-Int. 17. Did anybody help you in the work?

Ans. I don't think I had anybody to help me.

Cross-Int. 18. How came you to make more than one pair?

Ans. I got orders at different times to make different pairs.

Cross-Int. 19. What was the difference between the first pair and the second, and the second and the third, as you remember it?

Ans. As far as the difference is concerned, I couldn't tell you anything unless you show me the instruments.

Cross-Int. 20. What did you do with the instruments after you made them?

Ans. As soon as I had them done they were taken away by Mr. Watson or somebody else.

Cross-Int. 21. By whom else?

Ans. I couldn't tell just who it was; I don't remember.

Direct Examination resumed.

Int. 22. Who taught you to stretch membranes?

Ans. My mother.

Int. 23. For what purpose?

3359

Ans. She used to cover fruit jars with skin very much like the skin I used here. I used to watch her stretching them.

Int. 24. How did she stretch them?

Ans. She would take a piece of skin and hold it down with her hands, and some one else would tie it down for her.

Int. 25. Did she moisten it or did she not?

Ans. The skin was not always dry when she put it on.

J. OSCAR ZIEGLER.

Attest: W. P. PREBLE, Jr., *Examiner.*

DEPOSITION OF GEORGE D'INFREVILLE.

BOSTON, September 15, 1879.

Direct Examination by J. J. STORROW, Esq., *of Counsel for Complainant.*

Int. 1. Please state your name, age, residence, and occupation.

Ans. George d'Infreville; thirty-three; New York City; electrical engineer.

Int. 2. State generally for how long and to what extent you have studied electrical science and telegraphy, and where.

Ans. I have studied electricity and telegraphy ever since the age of ten. It was a part of my instruction in the School of France. It was a part of the programme for the degree of Bachelor of Science, which I took in Nancy in 1863. It was also a part of the programme for the admission to the military academy of St. Cyr, in which I was pupil for two years. It was also part of the programme for the last examination before being received as lieutenant in the French army. I had plenty of leisure while in the army to complete my instruction in that branch, for which I have always had a pronounced taste. Upon leaving the French service after the war I went to America, and entered as soon as possible in the electrical and telegraph business. I have always kept myself posted as far as I could with the latest discoveries made in electrical science, spending a good deal of money in books, experiment and study.

Int. 3. What have been your occupations in this country connected with electricity, and how long have you been so occupied?

Ans. I have taken out some patents in duplex telegraphy for my own inventions, also in Canada, and have drawn myself the specification of my last patent, and would have done so for the first if I had then had sufficient knowledge of the English language. I have put some of these systems of duplex instruments in operation in several telegraph companies, and I have been the electrician of the Atlantic and Pacific Telegraph Company for eighteen months, until it was controlled by the Western Union Telegraph Company. I have continued since to experiment and study on electricity, and to manufacture electrical or telegraph apparatus, either for myself or for the public. I have for this purpose a workshop of my own, an electrical laboratory, at 39 Dey Street, New York.

Int. 4. Whether or not you have been in the habit of examining patents and descriptions of electrical apparatus, for the purpose of understanding the construction and operation of such apparatus?

Ans. I have.

Int. 5. Whether or not you have ever testified as electrical expert in suits in court?

Ans. Yes, sir: in the quadruplex case of the Atlantic and Pacific Telegraph Company against the Western Union Telegraph Company.

Int. 6. Have you examined and do you understand the Bell patent, 174,465, of March 7, 1676?

Ans. I have examined it, and I do understand it.

Int. 7. Please direct your attention to the apparatus described and shown in Figure 7 of that patent, and in the part of the printed specification which specially relates to that figure. What is the function and purpose of the battery in that apparatus?

Ans. The function and purpose of the battery in this apparatus is to keep the electro-magnets *b* and *f* permanently magnetized.

Int. 8. What effect does this permanent magnetization have upon the armatures when the apparatus is not in operation?

Ans. It magnetizes them by influence, and therefore attracts them toward the poles until the retractile strength of the diaphragm is balanced.

Int. 9. When the apparatus is put in action in the manner de-

3361

scribed in the patent, what is the immediate cause of the sound that is heard by the listener at the receiving instrument?

Ans. The vibration imparted to the air in the cone L by the motion of the diaphragm *i* of the receiver and the armature to which it is attached.

Int. 10. What determines the kind, quality or character of the sound which is thus heard at the receiver?

Ans. The kind, quality or character of the variations in the magnetism of the electro-magnet *f* of the receiver.

Int. 11. How does the character of the variations in the magnetism of the electro-magnet of the receiver determine the character of the sound heard at that instrument?

Ans. By moving to and fro the armature *k h* of the receiver, and the diaphragm which is attached to it.

Int. 12. What is the correspondence between the character of the variations in the magnetism of the electro-magnet of the receiver and the kind of motion which takes place in the receiving armature and diaphragm attached to it?

Ans. All the variations in the strength of the electro-magnet *f* of the receiver are accompanied by corresponding changes in the motion of the armature and diaphragm of the receiver.

Int. 13. In the operation of any given instrument like Figure 7, what determines immediately the extent and the vigor of each motion of the receiving armature and attached diaphragm?

Ans. The extent and vigor of variation in the magnetism of the electro-magnet *f*.

Int. 14. What determines the extent, vigor and character of those magnetic variations?

Ans. The extent, vigor and character of the variations of the electric current which passes over the circuit of which the electro-magnet receiver is a part.

Int. 15. What causes those variations in the electric current in the operation of that apparatus?

Ans. The motion of the armature *d c* of the electro-magnet of the transmitter.

Int. 16. In what manner and according to what known laws of

electricity and magnetism does the motion of that armature cause those variations?

Ans. Whenever an iron or steel armature is made to approach the pole of an electro-magnet, the cores of which are permanently magnetized, a current of induction in a certain direction is set up in the coils of the electro-magnet, whenever there is a circuit for said current to flow over, and whenever said armature recedes from the pole a current of induction, now of opposite direction to the former one, is set up in the coils of the electro-magnet. In the transmitter shown in Figure 7, the electro-magnet *b* is permanently magnetized by the constant current of a battery. Whenever the armature *d c* moves toward the pole of the electro-magnet *b*, a current of induction is set up, as explained before. Whenever it recedes, another current of induction of opposite direction is set up in its turn in the coils of the electro-magnet *b*, also as explained before. Whenever the current of induction set up through the coils of an electro-magnet *b* is of the same direction as the battery current in the circuit, it increases the electric current all over the circuit; and whenever said current of induction is of opposite direction to said battery current, the electric current is decreased all over the circuit.

Int. 17. What determines the extent or violence of the variations in the strength of the current flowing over the circuit when the apparatus is operated, as you have described?

Ans. The extent and violence of the variations of the motion of the armature *d c* of the transmitter.

Int. 18. What determines whether the induced magneto current shall be in the same direction as the battery current, so as to increase the actual current on the line, or whether it shall be in an opposite direction to the battery current, so as partially to neutralize it and diminish the actual current on the line, in the operation of this apparatus?

Ans. Whether the armature moves towards or from the pole of the magnet.

Int. 19. What determines the kind or character of the variations in the strength of the current in the operation of that apparatus?

Ans. The kind and character of the variations of the motion of the transmitting armature.

3363

Int. 20. What do you mean by the phrase "kind and character" of the motion?

Ans. I mean not only the period of time and the extent of each vibration, but also any change of speed or direction of motion which may take place in the movement of the transmitting armature between the two extreme positions it takes during this whole vibration.

Int. 21. Now, having traced the different steps which take place when that apparatus is put in operation, I wish you would state the relation which exists between the motion of the diaphragm of the transmitter and the motion of the diaphragm of the receiver.

Ans. The diaphragm of the receiver actually copies any and every variation of motion which takes place in the transmitting diaphragm at the same corresponding time.

Int. 22. Is it or is it not important to the operation of this apparatus, for the purpose of transmitting articulate speech or other sounds uttered or made at the transmitting station, that the receiving diaphragm should, in its motions, copy the motions of the diaphragm of the transmitter?

Ans. It is not only important, but absolutely necessary.

Int. 23. Why is it absolutely necessary?

Ans. Because the vibrations of the air at the receiver must be like those of the air at the transmitter, and this could not take place if the vibrations of the receiving diaphragm were not like those of the transmitting diaphragm.

Int. 24. What causes the vibrations of the air in the receiver, and what determines their character?

Ans. The vibrations of the air in the receiver are caused by the vibrations of the receiving diaphragm, and their character is determined by the character of the vibrations of said diaphragm.

Int. 25. What causes the vibrations of the air at the transmitter, what causes the vibrations of the moving part of the transmitter, and what determines the character of these vibrations?

Ans. The voice of the speaker in the cone at the transmitter sets the air there in vibration; the vibration of the air in turn sets in vibration the moving part of the transmitter; and the character of those vibrations is determined by the character of the sound uttered.

Int. 26. Is it or is it not also absolutely necessary in all other forms or modifications of the speaking telephones, which you know of, that the movements in the receiver shall copy the movements of that part of the transmitter which is actuated by the sound wave, with all their characteristic changes and variations?

Ans. It is absolutely necessary.

Int. 27. You have spoken of the generation of electrical currents in the coils of the transmitter, or of changes caused in the electrical condition of that part of the circuit by the movement of the transmitting armature: what effect does a change in the electrical condition of that part of the circuit where the transmitter is placed have upon the rest of the circuit?

Ans. Under ordinary circumstances it is felt instantly all over the circuit.

Int. 28. How far is this electrical fact, that a change in the electrical condition of that part of the circuit where the transmitter is situated, and caused by its action, is instantly felt in all parts of the circuit, practically availed of in the transmission of telegraphic or other signals by electricity?

Ans. It is the fundamental basis of all electric telegraphs.

Int. 29. State generally the way or method by which changes are produced in the electrical condition of that part of the circuit where the transmitter is situated.

Ans. By moving some part of the transmitter.

Int. 30. In the apparatus, Figure 7, of the Bell patent, what part of the transmitter is it that moves and causes the electrical or magnetic variations which occur in the operation of the apparatus?

Ans. The armature *d c* of the transmitter.

Int. 31. In the operation of this apparatus, is or is not that part of the circuit in which the transmitter is placed ever broken by that motion of the part of the transmitter which causes the operation of the apparatus?

Ans. It is never broken.

Int. 32. Is it or is it not important to the operation of this apparatus that the motion of the moving part of the transmitter shall never break that part of the circuit in which the transmitter is placed?

3365

Ans. It is not only important, but absolutely necessary.

Int. 33. Why is it essential?

Ans. Because the moving part of the receiver must at any and every instant be in electrical dependence upon the moving part of the transmitter.

Int. 34. Why is this essential?

Ans. Otherwise the moving part of the receiver could not copy all the variations of motion of the moving part of the transmitter.

Int. 35. You say there must always be that electrical dependence between them. I suppose such an electrical dependence can and will exist when both the transmitter and receiver are included in a single closed circuit, never broken by the motion of the transmitter, as shown in Figure 7, can it?

Ans. It can, and it will.

Int. 36. Suppose now you put an induction coil between the transmitter and receiver, arranging the circuits as is usually done with induction coils, and putting this same transmitter in the primary circuit and this same receiver in the secondary circuit. Shall you or shall you not have the electrical dependence of the receiver on the transmitter which you have said is essential?

Ans. I shall have it, because the introduction of an induction coil, in the manner which you have just described, I will compare to the introduction of what I should call an electrical lever; an induction coil being an electrical contrivance to transform what used to be known as quantity of current into intensity of current.

Int. 37. With the arrangement of circuits described in the last question, is it or is it not essential to the operation of the apparatus that the moving part of the transmitter shall never break the continuity of that part of the electrical circuit in which it is placed?

Ans. Just as essential as in the disposition shown in Figure 7 of the patent.

Int. 38. Please look at the whole apparatus shown and described in Figure 1 of Mr. Gray's patent, 166,095 (Record, page 579, Vol. II.), and which has been called, I believe, the Resonant Box Magnet Receiver patent. State whether, in the apparatus shown in that figure, the induction coil B is or is not the source of power which actuates the receiver.

3366

Ans. It is not.

Int. 39. What is the source of power in that apparatus?

Ans. The consumption of zinc or chemicals in the battery M B, which is placed in the primary circuit.

Int. 40. What is the essential function or office of the induction coil in that apparatus?

Ans. I have already characterized in my thirty-sixth answer the function of an induction coil, and it is for this purpose that an induction coil is here used.

Int. 41. In that apparatus, constructed, arranged and connected up as shown in said Figure 1 of that Gray patent, do you find, when it is operated in the manner shown in the patent, that continual dependence of all the variations of magnetism and motion in the receiver upon the variations or movements of the moving portion of the transmitter in every part of its motion, which you have said is essential to the operation of a speaking telephone?

Ans. I do not.

Int. 42. Is there or is there not in that apparatus, when so connected up, that continuity of circuit which is necessary to enable the moving portion of the transmitter, during each and every part of its movement, to control the magnetic condition or movements of the receiver at each and every instant?

Ans. There is not.

Int. 43. What is there in the construction or arrangement of that apparatus which prevents or which fails to enable it to have that control?

Ans. The moment the vibrator of the transmitting apparatus in its motion has broken the circuit in which it is placed, it has this very moment lost all control over the receiver. Whatever motion there may be, if any, in the receiver during the period of said break in the circuit, said motion is not due to any actual motion of the moving part of the transmitter. There may be a continuation of motion in the receiver, due to the former impulse caused by the contact which has ceased. Whatever I have said of one of the transmitters, C for instance, is true for the other, C′.

Int. 44. Is or is not the character of that transmitter such that in its operation, the movement of its moving part necessarily breaks

3367

at each vibration that portion of the circuit in which the transmitter is placed?

Ans. It necessarily breaks it.

Int. 45. Does or does not the kind of signals which, according to the description in that patent, the apparatus is to transmit, require the continuity of circuit which you say is destroyed by a circuit-breaking transmitter?

Ans. It does not.

Int. 46. State whether the various forms of transmission apparatus shown in the other patents of Mr. Gray, which have been put in evidence, do or do not always and necessarily operate when in action to break that part of the circuit in which they are placed. I desire to except from this question the patent or patents which have been granted to Mr. Gray for improvements in speaking telephones upon applications filed since October, 1877.

Ans. They all necessarily operate to break that part of the circuit in which they are placed.

Int. 47. Please answer the same question with reference to all the transmitters which have been put in evidence by Mr. Gray or by Mr. Goodridge, as having been used by either of them as transmitters before the date of Mr. Bell's patent of March 7, 1876.

Ans. They also all necessarily break the circuit in which they are placed.

Int. 48. Does or does not any one of these transmitters to which either of the two preceding questions apply, have any device or means by which the character of every part of the motion performed by the moving part of the transmitter controls the receiver at each and every instant in the corresponding part of its changes or motions?

Ans. They have not.

Int. 49. In the Reiss telephone, which has been put in evidence by the defendant in the extract from Ferguson on page 703, Vol. II. of the Record, and has been referred to by Mr. Renwick and Mr. Pope, what actuates or moves the stretched membrane diaphragm of the transmitting apparatus when operated in the manner described in Ferguson?

Ans. The sound produced by the voice or a musical instrument at the mouthpiece of the transmitter.

3368

Int. 50. Why is it that the Reiss telephone will not reproduce that speech or sound at the receiving instrument?

Ans. Because the moving of the transmitter breaks the circuit; and while the circuit is thus broken, any motion of the moving part of the transmitter can have no influence or control over the receiver. In the same way as explained in my forty-third answer.

Int. 51. Please state whether or not the apparatus shown and described in the Varley patent, put in evidence by the defendant and printed on page 549, Vol. II. of the Record, has a transmitter which, when in operation, necessarily, at each vibration which is effective at the other end of the line, breaks that part of the circuit in which it is placed.

Ans. It has.

Int. 52. Please look at the apparatus shown in the patent of Edison and Harrington, put in evidence by the defendants and printed on page 571, Vol. II. of the Record, and state whether it has a transmitter which at each motion makes and breaks that part of the circuit in which it is placed; and if so, state the character of that transmitter, and how it is moved.

Ans. It has such transmitter. As to the character of this transmitter, it is a circuit-breaker, and it is moved by the hand of the operator. It is a regular Morse key, represented in the drawing by the letter *a*.

Int. 53. And I suppose that the testimony you have given as to the incapacity of a circuit-breaking transmitter to control the receiver, as is required in a speaking telephone, applies to this apparatus, does it?

Ans. It does.

Int. 54. What is the character of the signals transmitted by that Edison apparatus?

Ans. Ordinary Morse signals.

Int. 55. I call your attention now to that part of the apparatus shown in that patent which is part of the relay magnet improvement forming the subject matter of the patent; namely, the cup *g*, filled with liquid containing two electrodes, of which one is fixed at the bottom of the cup, while the other is moved up and down in the

3369

liquid by the motion of the armature of the relay magnet *c*. I understand from the patent that the variations of current in the line which extends from that relay magnet to the Morse sounder at the receiving station are caused by the greater or less distance of liquid which is interposed between those two electrodes, according as the one which is attached to said armature *f* is at the upper end of its path or at the lower end of its path. I wish to ask you first what, in that apparatus, determines the extent of the motion of that upper electrode.

Ans. The manner in which the apparatus is constructed.

Int. 56. What particular thing is it in the construction of that apparatus that controls or limits the extent of that motion?

Ans. A front and a back stop contact or limiter, such as are used in an ordinary telegraph relay.

Int. 57. State whether or not the operator can at will vary the extent of that motion, or change the variation in the current which that motion produces, without altering the construction of that apparatus, or its adjustment, or the strength of the battery.

Ans. He cannot.

Int. 58. In the operation of that apparatus, does or does not the character of the signal which is given, or the information which is imparted by that signal, depend upon the character of the motion which takes place in the movement of that upper electrode while it is travelling from the upper extremity of its limited path to the lower extremity of its limited path?

Ans. It does not.

Int. 59. I call your attention now to the Siemens & Halske magneto inducting key and transmission apparatus, put in evidence by the defendant, in the extract from Sabine, which is printed upon page 697, Vol. II. of the Record. State in the first place the kind of signals which are transmitted by that apparatus.

Ans. Common Morse signals.

Int. 60. What kind of an instrument is used for a receiver in that apparatus?

Ans. A well-known polarized relay.

Int. 61. What is the motion given to the armature in that receiver in the operation of that apparatus?

Ans. It moves fully at each stroke between two limiters or contact stops.

Int. 62. Is or is not the character of the signal which it gives, or the information it imparts, affected by the character of its motion during the period which elapses between its contact with the stop at one extremity of its path and its contact with the stop at the other extremity of its path?

Ans. It is not.

Int. 63. How is the moving part of the transmitter moved?

Ans. By the hand of the operator.

Int. 64. What determines the extent of motion given to the transmitter?

Ans. Limiters or contact stops.

Int. 65. Does or does not the character of the motion of the transmitter, during the period which elapses between its contact with the stop at one extremity of its path, and its contact with the stop at the other extremity of its path, affect the character of the signals or the information given by them?

Ans. It does not.

Int. 66. How are the currents which operate that apparatus generated in it?

Ans. They are magneto-electric currents, generated under the well-known law of induction by the motion of a Siemens armature, which is a part of the moving part of the transmitter.

Int. 67. In the ordinary operation of that apparatus as shown in that extract from Sabine, is or is not the entire circuit continually closed?

Ans. It is.

Int. 68. For the ordinary operation of that apparatus as there shown, is it or is it not essential that the circuit shall be kept closed continually during the whole of each motion of the transmitter from one extremity of its path to the other?

Ans. It is not essential. The circuit could be open during some part of the time of the passage of the moving part of the transmitter from one limiter to the other, without preventing the regular working of the receiver.

Int. 69. Is the apparatus described in that extract from Sabine

3371

capable of reproducing at the receiving station articulate speech or other sound uttered at the transmitting station?

Ans. It is not made for that purpose, and besides, it cannot do it.

Int. 70. Does or does not any apparatus constructed, arranged and connected up as shown in the patents and extracts from printed books put in evidence by the defendant, which I have examined you about in the preceding questions, or put in evidence by the defendant and connected up and arranged as testified to by Mr. Gray and Mr. Goodridge, before the date of the Bell patent of March 7, 1876, operate to cause, by sound waves produced by the voice of the speaker striking upon some part of the transmitting apparatus, electrical impulses or variations corresponding in the character of their changes to those sound waves?

Ans. None of them do so.

Int. 71. If you have ever constructed any speaking telephones with stretched membrane diaphragms in accordance with Bell's patent of March 7, 1876, please produce them to be put in evidence as part of your testimony.

Ans. I have, and here they are.

[*Complainants put in evidence the said pair of telephones, marked "Complainants' Exhibits 49 and 50, D'Infreville Membrane Telephone Transmitter and Receiver, W. P. Preble, Jr., Examiner."*]

Int. 72. Where were those telephones made, and under whose supervision and direction?

Ans. They were made in my own shop, under my own supervision and direction.

Int. 73. Have you ever transmitted and received articulate speech on the pair 49 and 50; if so, when and where?

Ans. As soon as they were completed, which was about a month ago, I tried them in my own place, where I have separate rooms, and there was no possible transmission of articulate speech through the air between the room where the transmitter and the one where the receiver was. The surroundings were quite noisy. I succeeded at once in transmitting and receiving several sentences with my assistant, and repeated my experiment several times on different days. That pair of telephones afterwards never worked so well as when they were just made. I took them to Boston and tried

them again there with Mr. Quimby. I still heard a few words with them; but I noticed that for some reason or another the membranes were no longer stretched tight, and I stopped further experiment with them.

Int. 74. Who was present at that first trial in New York at your shop?

Ans. Nobody besides my assistant, who is a young German named John Haller.

[*Adjourned to Sept.* 16, *at* 9.30 *A. M.*]

BOSTON, September 16, 1879.

Int. 75. If you have subsequently made another pair of membrane telephones, please produce them.

Ans. I produce them.

[*Complainants put in evidence said telephones, and they are marked "Complainants' Exhibits* 51 *and* 52, *D'Infreville Banjo Membrane Transmitter and Receiver, W. P. Preble, Jr., Examiner.*"]

Int. 76. Whether or not this pair of telephones is constructed in accordance with the description and drawing of Figure 7 in the Bell patent of March 7, 1876?

Ans. Yes, sir, it is.

Int. 77. Where were they made, and under whose direction?

Ans. In my shop and under my direction.

Int. 78. Have you ever transmitted articulate speech by this pair of telephones, 51 and 52? If so, state when you first did it, and where, and who was present then.

Ans. Upon the completion of this pair of telephones last Friday, at four o'clock, in my shop, I took them with me to Boston, having no time to try them in New York. The next day in Boston I tried them with Mr. T. A. Watson, in the building 40 State Street. Before beginning the experiment I stretched the membrane as I have seen it usually done in similar instruments, that is to say, common army drums, by the drummers during my stay in the army, whenever they wanted to use them, to be made slack again after use. Mr. Watson and I transmitted and received in turn a series of sentences without any necessity of repeating them. The place where I tried them and the arrangement of circuit were the same as

3373

described in Mr. Cross's deposition, page 383. I used four Bunsen cells, with bichromate of potash in the porous cups with the carbon, and acidulated water outside with the zinc. The cells were about exhausted, having worked more or less for one month. Mr. Storrow was present during a part or all of the experiment.

Int. 79. When and where did you next try to transmit articulate speech with the same pair of telephones, who tried them with you, and with what results?

Ans. Last evening, in the same place, and under the same circumstances except that the battery fluids had been renewed, and that we varied the amount of battery from two to six cells. I tried them on this occasion with Mr. E. E. Quimby in the same manner as I had with Mr. Watson. With two cells of battery, I transmitting and Mr. Quimby receiving, I made Mr. Quimby hear a few words. With three cells of battery, the improvement was sensible. With four cells the results were good. Mr. Quimby and I changed places. I asked, then, the speaker to put on five cells of battery, and I noticed improvement. We transmitted and received successfully a series of sentences. In fact, I was not losing a single word, except when making some noise myself with the connecting wires around me. I then ordered six cells of battery on, to watch if any improvement. There was yet some improvement, but not so marked as when we changed from three to four and five cells. This I readily explained by the resistance of my telephones, the electromagnet in each measuring nearly ten ohms. In electrical tension five cells of said battery are nearly equal to ten cells of Daniell's battery, which is the number at which I began to get good results in New York in my first experiment with the telephones 49 and 50, which have closely the same resistance as 51 and 52. In fact, considering the resistance of the circuits employed (including the internal resistance of the battery), four cells of this Boston battery were equivalent to fifteen cells of my New York battery. Mr. Quimby took again the place of listener and I of speaker; and though I think he has some difficulty in hearing generally, I satisfied myself that I could make him hear sufficiently well for practical purposes. In fact, provided the membranes of said telephones are stretched as prescribed in the patent, they would be very valuable instruments

in many circumstances, were no better known to-day. After speaking through the transmitter for a few minutes, I noticed that the membrane became damp. This in my opinion would not be a hindrance to the use of the invention, as several transmitters could be ready at hand, and generally the conversation through a telephone, as I have seen in practical operation, lasts but a short time. At no time during these experiments in Boston with 51 and 52 did I make use of the adjustment provided for altering the distance of the electro-magnet from the armature. The mean distance of the armature from the pole of the electro-magnet during those experiments was nearly one sixteenth of an inch; I mean the distance between the centre of the thickness of the armature and the surface of the poles of the electro-magnet, measured on the prolongation of the axis of the core.

Int. 80. I believe you did not state how many cells you used in New York with the telephones 49 and 50: please do so.

Ans. I began with one cell of a sulphate of copper battery, and gradually increased it up to ten cells, when I began to get good results. I increased to fifteen, twenty, twenty-five and thirty cells. From fifteen to twenty-five, the results were almost the same. At thirty it was difficult to prevent the armature from touching the core.

Int. 81. What harm was it when the armature touched the core?

Ans. We could not receive at all.

Int. 82. I observe that the first pair of these telephones, 49 and 50, have no provision for tightening the membranes or stretching them, after the instrument has once been completed and put in use. How did you stretch the membranes on this first pair?

Ans. I applied the membranes while perfectly soaked with water, on the end of the cone as shown in the patent, tying them first with one piece of iron wire and then with another.

Int. 83. In the second pair of telephones, 51 and 52, I observe that the membranes are attached to a brass ring, which can be drawn down by nuts and screws so as to stretch the membrane at pleasure, after the instrument is completed and put in use. Why did you adopt this device, and where did you learn it?

Ans. I adopted this device because I knew that experiments

337 5

were wanted on them, perhaps, for several days or longer, while in the first pair I only wanted to verify the ability of the apparatus described in Figure 7 of the Bell patent to do what was claimed for it. I have known this device ever since boyhood, and I saw it commonly used in the drums used by musicians, and more generally in short drums. It is well known in this country on the banjo, from which this device is exactly copied.

Int. 84. What led you to determine the size of those four telephones? And state what is the diameter of the diaphragms.

Ans. The diameter of the diaphragms is about two inches. I made them sufficiently large so that the transmitter would cover wholly the mouth of the speaker; and as the diaphragm of the receiver in the patent is shown to be equal to the diaphragm of the transmitter, I took it as the basis of my proportion of the receiver. The diaphragms of these instruments are about three times the diameter of the diaphragm represented in the regular printed copies of the Patent Office. The other parts are substantially in proportion.

Int. 85. State what determined you in fixing the length of the armatures of 51 and 52.

Ans. They were not shown in the patent. The length of the armature is about the same as the radius of the membrane.

Int. 86. What determined you in fixing the thickness and the width of these armatures?

Ans. In the patent they are represented as rather thin armatures; about the width nothing is shown or described in the patent, but the manner of constructing armatures to suit any desired purpose is well known.

Int. 87. What are the well-known rules applicable to this apparatus, which govern electrical engineers in determining the width and thickness of armatures?

Ans. It is according to whether we want to obtain energy in attraction or speed of motion, or both, in which latter case we have to compromise somewhat between some of the conditions required for each of the first two purposes.

Int. 88. Please state the width and the thickness ordinarily adopted for armatures to go with a magnet and core of any given size in common telegraphic instruments, and then state how electri-

cal engineers vary the width or the thickness in order to obtain force of attraction at the expense of speed, or speed at the expense of energy of attraction.

Ans. The thickness generally adopted in common telegraph instruments is nearly one third of the diameter of the core. The width generally adopted is the same, or a trifle greater than the diameter of said core. The armatures are made generally flat, and are presented with the broadest side to the core. Whenever force of attraction is desired at the expense of speed, the armature will exceed more or less those dimensions, and whenever speed is desired at the expense of force, those dimensions will be reduced more or less.

Int. 89. Which dimension would you reduce first or chiefly, in order to obtain speed with the least loss of force consistent with the increased speed?

Ans. Their thickness.

Int. 90. Why does an armature which presents less mass opposite to the poles of an electro-magnet which operates by being alternately magnetized and demagnetized, partially or wholly, work quicker than one which presents a larger mass?

Ans. Because its magnetic and mechanical inertia are smaller.

Int. 91. Why is it advantageous to diminish that mass by making the armature thinner instead of narrower?

Ans. By making it thinner the mean distance of the mass of the armature from the pole is diminished, while if I decrease simply the width I diminish its mass, it is true, without corresponding gain but with a positive loss in the attraction.

Int. 92. What is the advantage of having the mass near the pole?

Ans. The attraction of an electro-magnet increases very rapidly as the armature approaches the pole; so does also the magneto-electric influence of the armature upon the electro-magnet. The law of attraction within ordinary limits is, that the attraction decreases in inverse ratio to the square of the distance.

Int. 93. Were or were not the rules governing the size of armatures, which you have just described, well known to electrical engi-

3375

were wanted on them, perhaps, for several days or longer, while in the first pair I only wanted to verify the ability of the apparatus described in Figure 7 of the Bell patent to do what was claimed for it. I have known this device ever since boyhood, and I saw it commonly used in the drums used by musicians, and more generally in short drums. It is well known in this country on the banjo, from which this device is exactly copied.

Int. 84. What led you to determine the size of those four telephones? And state what is the diameter of the diaphragms.

Ans. The diameter of the diaphragms is about two inches. I made them sufficiently large so that the transmitter would cover wholly the mouth of the speaker; and as the diaphragm of the receiver in the patent is shown to be equal to the diaphragm of the transmitter, I took it as the basis of my proportion of the receiver. The diaphragms of these instruments are about three times the diameter of the diaphragm represented in the regular printed copies of the Patent Office. The other parts are substantially in proportion.

Int. 85. State what determined you in fixing the length of the armatures of 51 and 52.

Ans. They were not shown in the patent. The length of the armature is about the same as the radius of the membrane.

Int. 86. What determined you in fixing the thickness and the width of these armatures?

Ans. In the patent they are represented as rather thin armatures; about the width nothing is shown or described in the patent, but the manner of constructing armatures to suit any desired purpose is well known.

Int. 87. What are the well-known rules applicable to this apparatus, which govern electrical engineers in determining the width and thickness of armatures?

Ans. It is according to whether we want to obtain energy in attraction or speed of motion, or both, in which latter case we have to compromise somewhat between some of the conditions required for each of the first two purposes.

Int. 88. Please state the width and the thickness ordinarily adopted for armatures to go with a magnet and core of any given size in common telegraphic instruments, and then state how electri-

cal engineers vary the width or the thickness in order to obtain force of attraction at the expense of speed, or speed at the expense of energy of attraction.

Ans. The thickness generally adopted in common telegraph instruments is nearly one third of the diameter of the core. The width generally adopted is the same, or a trifle greater than the diameter of said core. The armatures are made generally flat, and are presented with the broadest side to the core. Whenever force of attraction is desired at the expense of speed, the armature will exceed more or less those dimensions, and whenever speed is desired at the expense of force, those dimensions will be reduced more or less.

Int. 89. Which dimension would you reduce first or chiefly, in order to obtain speed with the least loss of force consistent with the increased speed?

Ans. Their thickness.

Int. 90. Why does an armature which presents less mass opposite to the poles of an electro-magnet which operates by being alternately magnetized and demagnetized, partially or wholly, work quicker than one which presents a larger mass?

Ans. Because its magnetic and mechanical inertia are smaller.

Int. 91. Why is it advantageous to diminish that mass by making the armature thinner instead of narrower?

Ans. By making it thinner the mean distance of the mass of the armature from the pole is diminished, while if I decrease simply the width I diminish its mass, it is true, without corresponding gain but with a positive loss in the attraction.

Int. 92. What is the advantage of having the mass near the pole?

Ans. The attraction of an electro-magnet increases very rapidly as the armature approaches the pole; so does also the magneto-electric influence of the armature upon the electro-magnet. The law of attraction within ordinary limits is, that the attraction decreases in inverse ratio to the square of the distance.

Int. 93. Were or were not the rules governing the size of armatures, which you have just described, well known to electrical engi-

3377

neers, and commonly acted upon by them in determining the size and shape of armatures, at the date of the Bell patent?

Ans. They were.

Int. 94. Does the apparatus Figure 7 require for its armatures speed rather than force, or force rather than speed, as compared with ordinary telegraphic instruments?

Ans. Speed.

Int. 95. Do or do not substantially these same rules apply in determining the size of an armature whose movement is to generate magneto-electric currents, as in determining the size and shape of armatures which are to be moved by variations in the attractive force of an electro-magnet?

Ans. They do.

Int. 96. Was or was not this fact known to electrical engineers at the date of said Bell patent?

Ans. It was known.

Int. 97. Have you read and do you understand the Bell patent, 186,787, of January 30, 1877, and the operation of the apparatus therein described?

Ans. I have read it, and I do understand it.

Int. 98. I wish to call your attention to the apparatus of Hughes shown in the extract from Schellen, put in evidence by the defendant and printed on page 694 of Vol. II. of the Record, and ask you to make some comparisons between that and the apparatus particularly shown in Figures 5 and 6 of the said Bell patent of January 30, 1877, and referred to in the eighth claim of said patent. First, I will ask you how the permanent magnet which forms part of said Hughes apparatus compares with the permanent magnent O which forms part of said Bell apparatus.

Ans. The permanent steel magnets are almost alike in both as regards their dimensions; so are the iron cores placed at the end of those permanent magnets.

Int. 99. How do the coils compare?

Ans. In Hughes's magnet the length of the coil is about two and a half times the diameter, while in the Bell magnet the length of the coil is about two thirds of the diameter. The coils in the Hughes apparatus do not differ in size or proportion from those

3378

generally used in telegraph instruments, while the coils used in the Bell apparatus are much shorter than those generally used in telegraph instruments.

Int. 100. What is the importance of this difference of proportion?

Ans. It insures quickness in the Bell apparatus.

Int. 101. State whether or not the magnet is used in the Hughes apparatus as part of a device for generating, by the motion of the armature, electrical currents which are to be utilized in the operation of the machine.

Ans. It is not.

Int. 102. How is it in the Bell apparatus?

Ans. It is used for this purpose in the Bell apparatus, when used as a transmitter.

Int. 103. Does Hughes use it both as transmitter and as receiver?

Ans. He only uses it as a receiver.

Int. 104. How is it in Bell?

Ans. It is used both as transmitter and receiver.

Int. 105. Considering now its use in the Hughes receiving apparatus, and the use of one of these instruments in the Bell apparatus as a receiver, state what work the variation in the magnetic attraction of this device, caused by the current sent over the line from the transmitting station, performs in the Hughes apparatus.

Ans. The magnet holds the armature, and the variation in its attraction, caused by the current coming over the line, releases it. The electro-magnetic arrangement alternately holds and releases the armature.

Int. 106. What moves the armature away from the electro-magnet?

Ans. The retractile strength of a spring.

Int. 107. What moves it back towards the magnet?

Ans. The force of the clockwork.

Int. 108. When the currents sent over the line vary the magnetic attraction in the Bell apparatus used as a receiver, what work does the variation in the magnetic attraction perform?

3079

Ans. It moves the armature to and fro.

Int. 109. What control does the attraction of the magnet practically exercise over the motion of the armature, from the time it begins to move away until it is brought back to its position near the poles in the Hughes apparatus?

Ans. It has none. It exercises itself in pure loss.

Int. 110. How is it in the Bell apparatus during the motion of the armature?

Ans. It controls it in every particular.

Int. 111. Is it or is it not important in the Bell apparatus that the variations in the magnetic attraction should control its action?

Ans. It is essential.

Int. 112. In the Hughes apparatus, what limits or determines the range or extent of motion of the armature in any given instrument?

Ans. The front and back stops or limiters.

Int. 113. How is it in the Bell apparatus?

Ans. It depends upon the variation of the attraction of the receiving magnet.

Int. 114. What determines the speed of the motion of the armature in the Hughes apparatus?

Ans. The strength of the retractile spring and of the clockwork.

Int. 115. What determines it in the Bell apparatus?

Ans. The speed of the variation of the attraction of the electro-magnet.

Int. 116. What determines the character of the motion of the armature when passing from its front position to its rear position and back again, in the Hughes apparatus?

Ans. The character of the mechanical force employed.

Int. 117. What determines it in the Bell?

Ans. The rear position and front position of the armature in the Bell apparatus are not constant, and depend just as much as the character of the rest of the motion of the armature upon the character of the variation of the attraction of the electro-magnet. The position at any time depends upon the amount and extent of motion given to it by the variation in the attraction of the electro-magnet.

Int. 118. Is it or is it not important in this Bell receiving ap-

3380

paratus that the extent, the speed and the character of the motion of the armature shall be determined by the extent, the speed and the character of the variations in the magnetic condition of the electro-magnet?

Ans. It is all important.

Int. 119. In the operation of the Hughes apparatus, do the extent, the speed and the character of the motion of the armature in passing away from the magnet or in passing back towards the magnet, vary with or affect the character of the signals received, and which the instrument is intended to manifest?

Ans. They do not.

Int. 120. How is it in the Bell?

Ans. It affects it constantly.

Int. 121. How important is it in the Bell that the character of the signals manifested shall be affected by these variations?

Ans. It is of such importance that otherwise the apparatus would not work.

Int. 122. I call your attention to the passage in the same work of Schellen, beginning on page 296 and extending to the top of page 298, in which he refers to the Hughes apparatus. I will ask you first whether that part of the text of Mr. Prescott's work on electricity which begins with the words "the rapidity," on page 397, and ends with the words "the electro-magnet operates," on page 399, is a correct translation from this part of Schellen.

Ans. It is a correct translation.

[*The translated extract is put in by the complainants, and it is marked "Complainants' Exhibit* 53, *Schellen Extract, W. P. Preble, Jr., Examiner."*]

Int. 123. I call your attention now to that extract from Schellen. I ask you first how the rapidity of signaling is affected by the extent of motion given to the armature when a given force is employed, so far as the principles of mechanics alone are concerned.

Ans. When you have a given force, the smaller the extent of motion the quicker the armature will accomplish it.

Int. 124. Now, according to the principles of electricity and magnetism laid down in this extract from Schellen, how would you vary

3391

the construction of an electro-magnet receiver in order to be able to work it with very small and very rapid variations of current?

Ans. One way is to have the armature moved by the variation of the attraction of an electro-magnet; in which case I would arrange so as to have the mean distance of the armature from the pole of the magnet as small as possible, and allow very little play to the armature, and I would contrive an apparatus which would work with such very small play. Another way is to have the armature moved by mechanical means; then I should simply use the action of the electro-magnet as what I would term an electro-magnetic escapement, to release the armature and abandon it to the action of the mechanical power. In that case I could have a large range of motion in the armature, and I could then use an apparatus which required such large range of motion.

Int. 125. Are the advantages of the Bell apparatus obtained by the first of these methods, or by the second?

Ans. By the first.

Int. 126. How does the extent of motion in the armature of the Bell receiver compare with that commonly used in telegraph instruments?

Ans. Considerably smaller. So small, indeed, that nobody up to the present time, so far as I know, has been able to measure it.

Int. 127. Does Hughes obtain the advantages of his combination of magnet and armature by the first or the second of those methods?

Ans. By the second.

Int. 128. How does the extent of motion of the Hughes armature compare with that commonly employed in telegraph instruments?

Ans. It is materially larger than in most of the telegraph instruments.

Int. 129. If the extract from Schellen which has been put in contains any passage which particularly points out that the Hughes apparatus has the character of the second of these claims and not of the first, please refer to it.

Ans. I read from page 399 of Prescott's book: "In the arrangement of the electro-magnet which was invented by Hughes, the action is entirely different." Then the description goes on explaining the

operation of the apparatus. Before this quotation there is, on page 398, the following sentence: "Consequently, when the receiving instrument consists of an electro-magnet, the rapidity of signaling depends essentially upon the distance of the armature from its poles, and upon the amount of play which the latter is permitted to have. The less the distance through which the armature moves, the more rapidly the signals may be made to succeed each other."

Int. 130. Do or do not the movements of the armature of the Hughes apparatus succeed each other more rapidly than in other ordinary forms of telegraphic apparatus?

Ans. They do not.

Int. 131. How is it with the Bell?

Ans. They are much more rapid.

Int. 132. What is the particular advantage, as respects the motion of the armature, which Hughes sought to obtain and did obtain in his apparatus?

Ans. He wanted, first, to have the armature begin to work as soon as possible after the contact at the transmitting station was made; second, to have his armature accomplish a considerable extent of motion, with sufficient force and promptness for the operation of his printer.

Int. 133. Are or are not the advantages referred to in your last answer important to the operation of the Bell telephonic receiver?

Ans. The Bell apparatus is not for the same purpose. These advantages are not desirable in the same sense in the Bell apparatus; some of them not at all. The only desirable one I see is the quickness of its motion, in order that it shall obey all the motions of the transmitter.

Int. 134. Can the currents of electricity employed in the Hughes apparatus so affect the receiving magnet as to cause it by its attraction to bring back the armature from its extreme position to the poles of the magnet?

Ans. They cannot, and they do not.

Int. 135. Why not, and what is their effect on the magnetism of the cores?

Ans. Because the armature has practically gone away from the magnetic field of attraction. The effect of the current actually

used in that apparatus, on the magnetism of the cores, is to decrease it.

Int. 136. Suppose in that apparatus currents were employed of a direction or of a strength fit to cause the magnet to have sufficient variation in its attraction alternately to release the armature, when it was close to the poles, and then draw it back again from its extreme position, what effect would the attempt to use such currents and perform such work have upon the promptness of action which Mr. Hughes desired to obtain?

Ans. It would reduce it very much.

Int. 137. In a telephonic apparatus such as is shown in Figure 7 of the Bell patent of 1876, and in the different figures of the Bell patent of 1877, what must be the character of the material of the armatures?

Ans. It must be material capable of inductive action.

Int. 138. And what will be the effect of a greater or less inductive or magnetic capacity of the material of which they are composed?

Ans. The more inductive the better. I will add that all inductive materials are paramagnetic or diamagnetic; that is, capable of having their motion affected by a magnet, though they differ very much in degree.

Int. 139. What are the materials which are recognized or used in telegraphy as being inductive or magnetic to an extent which is practically useful?

Ans. Iron and steel.

Int. 140. I find it stated in the Bell patent of 1877, that "it is important that the distance of the magnet from the plate should be as little as possible, without, however, being in contact." Tell me how the operation of the apparatus Figure 5 of that patent, when used as a receiver, would be affected by placing the plate in contact with the poles?

Ans. It would not work.

Int. 141. What would be the difficulties?

Ans. The diaphragm would not be free to execute the same motions as if it was not in contact. The condensed magnetism of the magnet would have more chance to take place, and consequently

3384

the variation in the magnetism of the magnet would be much more sluggish. Condensed magnetism, as is well known in science, is the peculiar residual magnetism which takes place in a closed magnetic circle; that is, for instance, the circle completed by allowing an armature to come in contact with both cores of a horseshoe magnet.

Int. 142. In an apparatus in which an armature is to be moved quickly by variations in the magnetic condition of an electro-magnet, is it advantageous or disadvantageous that the armature should come in contact with the poles at each movement?

Ans. It is disadvantageous.

Int. 143. Is or is not this fact well known in telegraphy?

Ans. It is.

Int. 144. I perceive that in the apparatus Figure 7 of the Bell patent of 1876, the cores of the transmitting magnet and of the receiving magnet are both of them polarized by the action of the constant battery current, and that the cores of the instruments shown in the patent of 1877, and which are there described as intended to be used both for transmitters and receivers, are also permanently magnetized, either by a constant battery current or by constant contact with a permanent magnet. Is it or is it not of importance for the transmitting instrument, that the core of its electro-magnet shall be continually polarized?

Ans. It is absolutely important; otherwise no magneto-electric current could be generated by any possible motion of the armature.

Int. 145. Please look at Mr. Goodridge's one hundred and fifty-eighth cross-answer, page 103 of the Record, in which he refers to some possible magneto currents generated by the motion of these vibrating armatures, while the contact is broken in front of the electro-magnets, whose coils are included in the circuits. Tell me whether the direction of the magneto currents which these motions tend to generate is such that they tend to increase or tend to impair the effects obtained from the variations of the battery current caused by the circuit breakers.

Ans. Their direction is such that they operate to impair it.

Int. 146. Are these magneto currents, so generated in that apparatus, strong enough to have any practical effect on its operation?

Ans. No, they are not.

Int. 147. Are the variations of current which practically work the receiver in that apparatus due to anything except the action of the vibrating reed of the transmitter, making and breaking that part of the circuit in which it is placed at each vibration, and if so, what?

Ans. They are not due to anything else.

[*Adjourned.*]

BOSTON, Sept. 17, 1879.

Int. 148. Please look at the receiving apparatus, consisting of a horseshoe electro-magnet with a hollow box resting on its poles, constructed, arranged and connected up as shown in Mr. Gray's patent, 166,095, and state whether the combination of parts in that arrangement is or is not substantially the same as that of Figure 5 of the Bell patent of January 30, 1877.

Ans. It is not.

Int. 149. In what respect do they differ?

Ans. First. The horseshoe electro-magnet in Mr. Gray's patent is not permanently magnetized, while it is in Mr. Bell's patent. I mean to include in Figure 5 the iron core, with the bobbins and the permanent magnet which holds the cores, under the same denomination of Bell's horseshoe electro-magnet.

Second. The armature of the electro-magnet in Mr. Gray's patent is in contact with both cores, while in Mr. Bell's patent it is very near the cores, without, however, being allowed to touch them.

Third. Nothing in Mr. Gray's patent drawing indicates the material of which the box must be constructed, and the specification only says that it must be made of metal, without any reference to its inductive capacity being of any importance; while in Mr. Bell's patent attention is particularly called to the importance of this property in the armature.

Int. 150. In the apparatus of Mr. Edison, shown and described in the Edison and Harrington patent already referred to, is it or is it not essential to the transmission by that instrument of the signals which it is intended to transmit, that all or any of the circuits shown shall be continually and at all times closed?

Ans. It is not necessary that any of the circuits shall be always closed.

3386

Int. 151. What is the purpose and advantage in that apparatus of having the long circuit *m*, between the transmitting and receiving stations, always closed?

Ans. It is to avoid the spark which would be caused by breaking the long circuit under the strong current of the line battery.

Int. 152. Do or do not the two metallic electrodes which are included in the cup *g* make contact at each vibration of the armature *f*, and at each signal sent?

Ans. The drawing seems to show that they are making contact every time and at each signal sent, because there is no other limiter shown for the downward movement of the armature. The two electrodes *l i*, which form the limiters for the downward movement, are screws, and consequently adjustable, substantially as in common telegraph relays. This adjustment is shown in the drawing and described in the text of the patent, and it is well known that the armature *d* cannot be allowed to come in contact with the cores of the electro-magnets, as it would stick. The text of the patent, however, though it don't state clearly that there shall not be immediate contact of the electrodes in the cup *g*, does not say that they cannot be allowed to come in actual contact. He calls them contact points within a liquid, at the beginning of the specification and in his claim, and I don't see any inconvenience to the good working of the apparatus to have them come into actual contact. I think, on the contrary, that the apparatus will be able to work with less battery in the line circuit, and consequently the tendency to spark will be diminished, and the expense too, by that very fact of using less battery, and the trouble of decomposition of the liquid will also be lessened.

Cross Examination by CAUSTEN BROWNE, Esq., *of Counsel for Defendant.*

Cross-Int. 153. In the apparatus described in the Bell patent of 1876, and illustrated in Figure 7 of the drawing, is there an iron or steel core around which is coiled a portion of the transmitting end of the constantly closed circuit, and another iron or steel core round which is coiled a portion of the receiving end of that circuit?

Ans. There is at the transmitting end and also at the receiving

3387

end a well-known form of electro-magnet, the coils of which are part of the circuit.

Cross-Int. 154. Are the variations which may be produced in the magnetic condition of the core at the transmitting end of the circuit reproduced in the core of the receiving end?

Ans. They are.

Cross-Int. 155. And is this result caused by electrical undulations, waves or vibrations, which are induced in the line by the changes in the magnetic condition of the core at the transmitting end and traverse the closed circuit to the receiving end, there causing corresponding changes in the magnetic condition of the core at the receiving end?

Ans. Whatever the character of the variations in the magnetic condition of the core of the electro-magnet *b* is, these variations are copied by the receiving core with all their characteristics.

Cross-Int. 156. I so understand from your answer to the question before the last: what I ask you now is, whether or not this result of reproduction in the core, at the receiving end, of all the variations produced in the magnetic condition of the core at the transmitting end, is caused by electrical undulations, waves or vibrations which are induced in the line by the changes in the magnetic condition of the core at the transmitting end and traverse the closed circuit to the receiving end, producing there corresponding variations in the magnetic condition of the core at that end.

Ans. It is by vibrations of some form or other induced and propagated in the line, as described in the question.

Cross-Int. 157. In the Bell apparatus of the patent of 1876, Figure 7, these variations in the magnetic condition of the core at the transmitting station are produced by the vibration of an inductive armature within the magnetic field of that core, are they not?

Ans. They are.

Cross-Int. 158. When you have two cores whose coils are included in the same circuit, one at the transmitting end and the other at the receiving end, is there any other way of producing variations in the magnetic condition of the core at the transmitting end of that circuit than the vibration of an inductive armature within its magnetic field?

3388

Ans. I do not see any other way at all with two soft iron cores, parts of electro-magnets the coils of which are in the same circuit, without any battery in that circuit, of producing any variation in their magnetic condition, without introducing some other feature into the arrangement.

Cross-Int. 159. I so understand. You will see that my last question is not exactly answered: please listen to it again.

Ans. First, I would say that there is no way to do it by vibrating an inductive armature before the poles of the transmitting magnet, if this magnet is not already magnetized by some process. Then, should it be magnetized, there is a way to produce such vibration in a transmitting magnet by moving an inductive armature before its poles. I don't know of any other way to produce them in the last case, when the core is magnetized, except by introducing some other feature or action into the apparatus; I mean into the whole arrangement.

Cross-Int. 160. When you have two cores whose coils are included in the same circuit, one at the transmitting end and the other at the receiving end, can you not produce variations in the magnetic condition of the core at the transmitting end by surrounding it with a special magnetizing coil, and varying or interrupting the current of that coil?

Ans. You cannot produce variations in the magnetic condition of the core at the transmitting end by interrupting the current of that coil. You can do it by varying that current.

Cross-Int. 161. When you interrupt the current in the special magnetizing coil, does not the magnetism in the core decrease gradually?

Ans. The magnetism in the core will fall off rather sharply though it takes some time, as any phenomenon requires time, and the fact that the core of an induction coil loses magnetism rather fast is made use of. In fact, the transmitting apparatus referred to in the question is nothing but an induction coil.

Cross-Int. 162. When you restore the current in the special magnetizing coil mentioned in my last question, is the magnetism in the core restored more or less rapidly than it is lost when you interrupt the current?

3389

Ans. It is restored less rapidly.

Cross-Int. 163. This rapid decline of magnetic condition of the core from its maximum to zero, and this less rapid rise of its magnetic condition from zero to its maximum, you think is not a variation in the magnetic condition of the core, do you? I ask because you said in your 160th answer, "You cannot produce variations in the magnetic condition of the core at the transmitting end by interrupting the current of that coil."

Ans. Considering the extra magnetizing circuit, which I will call primary circuit open, when I close it for a sufficiently long time I produce, provided there is a battery in this circuit, a certain amount of magnetism in the cores of the transmitter. As the cores had no magnetism, I cannot call variation the production of something which did not exist before, and when I break again the primary circuit for a sufficiently long time I call the demagnetization which takes place a gradual annihilation. I understand by variation the changes which take place in a thing so long as it exists.

Cross-Int. 164. If you should make and break this special magnetizing circuit a hundred times a second, — at regularly recurring intervals, of course, — would the cores at any time during that second be entirely without magnetism?

Ans. In any case, the amount of magnetism which may still remain will be very small, and *nil* for practical purposes.

Cross-Int. 165. In such a case as is supposed in my last question, do you not think that the minimum magnetism remaining in the core (which you say would be very small and *nil* for practical purposes) would be sufficient to hold an armature against the core with considerable attractive force?

Ans. I know there are some armatures — in printing telegraph, for instance — which remain in position before the cores of electro-magnets through which a rapidly interrupted current passes. This is due mostly to their mechanical inertia and to the weak retractile force which is set on them; because, with light armatures and a sufficient retractile force, which need not be very great, they will vibrate forward and backward in such circumstances.

Cross-Int. 166. In the operation of the apparatus shown in the Gray patent, 166,095, are not changes produced in the magnetic

condition of the core at the transmitting end by interrupting and restoring the current of a special magnetizing or primary coil surrounding that core?

Ans. Every time the primary circuit is made, the core becomes more or less magnetized, and every time you break it, the core, abandoned to itself, loses its magnetism.

Cross-Int. 167. Does this alternate magnetization and demagnetization of the core at the transmitting end produce electrical vibrations in the line wire?

Ans. Whenever the core is magnetized, according to the well-known law of induction a momentary current will take place on the secondary in a certain direction; and whenever losing its magnetism, a current of induction in the other direction goes through the secondary.

Cross-Int. 168. Does the alternate magnetization and demagnetization of the core at the transmitting end produce in the line wire electrical vibrations or pulsations of some kind?

Ans. I should call them rather "pulsations" of some kind.

Cross-Int. 169. And are these pulsations in the line wire reproduced in the core at the receiving end?

Ans. They are reproduced to a certain extent.

Cross-Int. 170. To what extent are they not wholly reproduced?

Ans. That depends upon the size of those receiving cores. The receiving magnet E E is of the ordinary size, and they are mostly reproduced on such magnets.

Cross-Int. 171. Explain how the completeness of reproduction of the pulsations depends upon the size of the receiving cores?

Ans. An electro-magnet with large and long cores will be more sluggish to the action of the current than one with smaller and shorter cores.

Cross-Int. 172. In your answer to the eighty-second interrogatory, speaking of your first pair of telephones 49 and 50, you say, "I applied the membranes, while perfectly soaked with water, on the end of the cone, as shown in the patent, tying them first with one piece of iron wire and then with another." Do you understand that the manner in which the membranes are fastened to the cones in these two telephones is a manner of attachment that is described

3391

in the Bell patent of 1876; if so, will you point out where you find any description or representation of such a mode of attachment?

Ans. I see in said patent, "The armature *c*, Figure 7, is fastened loosely by one extremity to the uncovered leg *d* of the electro-magnet *b*, and its other extremity is attached to the centre of the *stretched membrane a*." The italics are mine. The moment I had to have a stretched membrane, I was authorized in my opinion to use any well-known device to get it.

Cross-Int. 173. Do you understand that the specification describes, or the drawing shows, any way in which the membrane is to be attached to the cone? If so, what is that way?

Ans. The specification says you must have a stretched membrane applied at the end of the cones, as represented in drawing Figure 7. That's all.

Cross-Int. 174. What mode of attachment do you see represented in Figure 7?

Ans. No particular way of attachment is shown. It is simply shown that they are attached, and the drawing shows that they are stretched.

Cross-Int. 175. How does the drawing show that?

Ans. They are represented by straight lines, which is the way to represent them if they are stretched. They must even have been *exceedingly* stretched, because they are pulled by their centre towards the pole of the magnet which attracts the armature as it is shown in the drawing; and if they are represented by a straight line, that shows they must have a great power to resist, which implies such stretching.

Cross-Int. 176. Please refer to your ninety-ninth answer. You there say the coils in the Hughes apparatus do not differ in size or proportion from those generally used in telegraph instruments, while the coils used in the Bell apparatus are much shorter than those generally used in telegraph instruments. Is it not the fact that the coils used in quadruplex telegraph instruments, at the date of Bell's patent, were as short in proportion to their diameter as those shown in the Bell patent, and were considerably less in length than their diameter?

[*Objected to as referring to an apparatus not referred to in the answer, or put in evidence by the defendant.*]

Ans. When I said telegraph apparatus generally used, I did not mean to include among them the quadruplex apparatus, which had just been put in operation in one telegraph company.

Cross-Int. 177. Was that telegraph company the Western Union Telegraph Company?

Ans. Yes, sir.

Cross-Int. 178. And it did not introduce the quadruplex telegraph as early as August, 1874?

Ans. I have read that it did introduce it some time in 1874.

Cross-Int. 179. In your answer to the fifty-first interrogatory, you say that the Varley patent has a transmitter which, when in operation, necessarily, at each vibration which is effective at the other end of the line, breaks that part of the circuit at which it is placed. Is this true of the alternative transmitter, consisting of a rapidly rotating magneto machine, referred to in the Varley patent at page 563, Vol. II. of the Record?

Ans. I read in Varley's patent, "A magneto machine rapidly rotating will do the above duty equally well, if its speed of rotation be controlled by a good governor." No particular machine is described. It is not said whether it breaks the circuit or not. In fact, it is not essential that it shall not break the circuit and transmit just as well for the purpose there specified.

Cross-Int. 180. But how are you able to say affirmatively that the revolving magneto machine referred to in the Varley patent necessarily breaks the circuit?

Ans. I did not say that it necessarily breaks the circuit. I said that it was not essential that it should preserve the circuit continuous.

Cross-Int. 181. In the fifty-first interrogatory, you are asked whether the apparatus shown and described in the Varley patent "has a transmitter which, when in operation, necessarily, at each vibration which is effective at the other end of the line, breaks that part of the circuit in which it is placed." Can you say affirmatively that this is true of the revolving magneto machine referred to in the Varley specification?

3393

Ans. No, sir.

Direct Examination resumed.

Int. 182. Suppose you construct an apparatus consisting of a primary circuit, including a battery, a circuit breaker and a coil surrounding a soft iron core, and also a secondary circuit whose wires surround that same core at one end and also surround at a remote station a non-polarized soft iron core, and then make and break the primary circuit a hundred times in both circuits, would the core which is included in both circuits — that is, the core of the induction coil — at any time during that second be entirely without magnetism?

Ans. It would not.

Int. 183. Would the core at the remote station whose coils were included in the secondary, be at any time during that second entirely without magnetism?

Ans. It would.

GEORGES D'INFREVILLE.

Attest: W. P. PREBLE, Jr., *Examiner.*

DEPOSITION OF EDWARD E. QUIMBY.

BOSTON, Sept. 17, 1879.

Direct Examination by CHAUNCEY SMITH, Esq., *of Counsel for Complainants.*

Int. 1. What is your name, age, residence, and occupation?

Ans. My name is Edward E. Quimby; I am in my forty-ninth year; I reside in Orange, New Jersey, and have my office in New York; I am occupied as an expert in patent matters, and as a solicitor of patents.

Int. 2. State what have been your opportunities for fitting yourself to act as an expert in patent matters, and what has been your experience, and to what extent, if any, you have given attention to the subject of electricity.

Ans. During the last thirty years I have been connected more or less with various manufacturing enterprises. I have heretofore de-

signed and superintended the construction and operation of machinery for different purposes. I am familiar with patents, and have been frequently employed in investigating the scope and bearing of patents for various classes of inventions. I have drawn the specifications and claims of patents. I have testified as an expert in patent causes, and have acted as an arbitrator in questions relating to inventions and patents. I have been since boyhood especially interested in the science of electricity, and have informed myself in a general way concerning practical applications of electricity. I have not heretofore had occasion to make an especial study of the apparatus and methods used in electric telegraphing, but for some years past have had to take particular note of improvements in apparatus for transforming mechanical energy into electrical energy in connection with drawing the specifications and prosecuting the applications for patents for inventions in dynamo-electric machines, and in connection with litigation under such patents.

Int. 3. Will you compare the apparatus described in the defendant's Exhibit Varley Patent, and the method by which it is used and in which it operates, with the method of and apparatus for transmitting vocal and other sounds telegraphically, described in the Bell patent, No. 174,465, by causing electrical undulations, similar in form to the vibrations of the air accompanying such sounds, and state whether you find any substantial difference between them in construction, in the method or manner of use, in the method or mode of operation, in the electrical changes produced, and in the results?

Ans. The Varley apparatus embraces, first, instrumentalities for keeping up at a prescribed rate a succession of electrical impulses or waves in a local circuit; secondly, a sending key, by means of which such impulses or waves may be communicated to the line and be kept up upon the line for a longer or shorter time, according to the will of the operator; and thirdly, a tuned receiver, so tuned that its rate of vibration corresponds with the prescribed rate of the electrical impulses or waves.

In detail the apparatus consists of an induction coil, the primary circuit of which includes a battery and a tuning fork made by the current from the battery to vibrate between two contact points and thus alternately open and close two branches of the primary circuit,

3393

Ans. No, sir.

Direct Examination resumed.

Int. 182. Suppose you construct an apparatus consisting of a primary circuit, including a battery, a circuit breaker and a coil surrounding a soft iron core, and also a secondary circuit whose wires surround that same core at one end and also surround at a remote station a non-polarized soft iron core, and then make and break the primary circuit a hundred times in both circuits, would the core which is included in both circuits — that is, the core of the induction coil — at any time during that second be entirely without magnetism?

Ans. It would not.

Int. 183. Would the core at the remote station whose coils were included in the secondary, be at any time during that second entirely without magnetism?

Ans. It would.

GEORGES D'INFREVILLE.

Attest: W. P. PREBLE, Jr., *Examiner.*

DEPOSITION OF EDWARD E. QUIMBY.

BOSTON, Sept. 17, 1879.

Direct Examination by CHAUNCEY SMITH, Esq., *of Counsel for Complainants.*

Int. 1. What is your name, age, residence, and occupation?

Ans. My name is Edward E. Quimby; I am in my forty-ninth year; I reside in Orange, New Jersey, and have my office in New York; I am occupied as an expert in patent matters, and as a solicitor of patents.

Int. 2. State what have been your opportunities for fitting yourself to act as an expert in patent matters, and what has been your experience, and to what extent, if any, you have given attention to the subject of electricity.

Ans. During the last thirty years I have been connected more or less with various manufacturing enterprises. I have heretofore de-

signed and superintended the construction and operation of machinery for different purposes. I am familiar with patents, and have been frequently employed in investigating the scope and bearing of patents for various classes of inventions. I have drawn the specifications and claims of patents. I have testified as an expert in patent causes, and have acted as an arbitrator in questions relating to inventions and patents. I have been since boyhood especially interested in the science of electricity, and have informed myself in a general way concerning practical applications of electricity. I have not heretofore had occasion to make an especial study of the apparatus and methods used in electric telegraphing, but for some years past have had to take particular note of improvements in apparatus for transforming mechanical energy into electrical energy in connection with drawing the specifications and prosecuting the applications for patents for inventions in dynamo-electric machines, and in connection with litigation under such patents.

Int. 3. Will you compare the apparatus described in the defendant's Exhibit Varley Patent, and the method by which it is used and in which it operates, with the method of and apparatus for transmitting vocal and other sounds telegraphically, described in the Bell patent, No. 174,465, by causing electrical undulations, similar in form to the vibrations of the air accompanying such sounds, and state whether you find any substantial difference between them in construction, in the method or manner of use, in the method or mode of operation, in the electrical changes produced, and in the results?

Ans. The Varley apparatus embraces, first, instrumentalities for keeping up at a prescribed rate a succession of electrical impulses or waves in a local circuit; secondly, a sending key, by means of which such impulses or waves may be communicated to the line and be kept up upon the line for a longer or shorter time, according to the will of the operator; and thirdly, a tuned receiver, so tuned that its rate of vibration corresponds with the prescribed rate of the electrical impulses or waves.

In detail the apparatus consists of an induction coil, the primary circuit of which includes a battery and a tuning fork made by the current from the battery to vibrate between two contact points and thus alternately open and close two branches of the primary circuit,

3395

which respectively include two primary coils, wound in opposite directions around the core upon which the secondary coil is wound. A Morse sending key is so arranged that when depressed it connects the secondary coil with a condenser which is attached to the line, and when elevated connects the condenser with a tuned receiving instrument of the same pitch as the tuning fork at the remote station.

The method of using the Varley apparatus is to make in the ordinary manner, by means of the sending key, signals which are distinguishable by their variable duration. The method in which the apparatus operates is as follows: When the sending key at the transmitting station is held down, the electrical impulses or waves induced in the secondary coil by the vibrations of the tuning fork effect corresponding charges and discharges of the condenser, which in turn communicates corresponding electrical impulses to the line, thus charging and discharging a condenser attached to the line and connected with a receiving instrument at the receiving station, and causing the receiving instrument to give out its sounds so long as the electrical impulses or waves are continued in the line. When the sending key is elevated, the secondary coil is disconnected from the condenser, and the electrical impulses or waves are hence discontinued in the line and the receiving instrument ceases to give out its sound. Hence telegraphing by the Varley apparatus is wholly dependent upon the management, by the operator, of the sending key, and the Varley signals are simply longer or shorter sounds of like pitch.

The method of transmitting vocal and other sounds telegrapically, described in the Bell patent, No. 174,465, consists in causing electrical undulations, similar in form to the vibrations of the air accompanying such sounds, thereby causing a receiving instrument actuated by such undulations to take up corresponding forms of vibration and communicate them to the air, and thus reproduce such vocal and other sounds at the receiving station.

The apparatus designed for transmission is shown in Figure 7, and consists of a stretched membrane, the centre of which is fastened to one end of an armature hinged at its opposite end, so as to swing freely back and forth in the field of an electro-magnet, the coils of

which are included in a constantly closed circuit which also includes the coils of an electro-magnet at the receiving station.

Any sound uttered by the human voice, or otherwise made in the vicinity of the membrane, excites vibrations in the air which impose upon the membrane and the armature attached to it vibratory movements, corresponding in their direction, rate and velocity with the vibratory aerial movements excited by such sound.

The inductive action of the vibratory armature upon the constantly closed circuit being continuous, the induced undulations vary in their relative order and strength in a manner corresponding with the variations in the rate, velocity and direction of the vibratory movements of the armature, and hence with the rate, velocity and direction of the vibratory movements of the air, excited by the utterance or making of the sound by which the transmitting apparatus is actuated.

The differences between the Varley apparatus and the method by which it is used and in which it operates and the method of and apparatus for transmitting vocal and other sounds telegraphically, described in the Bell patent, No. 174,465, are of the most radical character.

In the Varley apparatus the tuning fork or some equivalent instrumentality keeps up at a prescribed rate a regular succession of electrical impulses in a local primary circuit, which by means of a Morse sending key in the secondary circuit are let on to or shut off from the line for the purpose of actuating at the receiving station a tuned receiver, whose rate of vibration corresponds with the prescribed rate of the electrical impulses and which indicates signals by sounding a tone of the definite pitch due to its normal rate of vibration for longer or shorter periods. There is nothing in the Varley apparatus adapted like the Bell membrane to vibrate at different rates or to be set into vibration by the impact of aerial vibrations of all kinds. The constant sound of the Varley tuning fork is an effect produced by the operation of the apparatus, and is of no consequence. On the contrary, the sound uttered or made in the vicinity of the Bell membrane at the transmitting station is the prime mover or controller of the whole apparatus. The Varley receiving apparatus gives out only one kind of sound, to wit, a sound of the same pitch as that of the tuning fork. The Bell receiver, on the other hand, reproduces sounds

3391

of all pitches, that is to say, it reproduces any sound which, having been uttered by the human voice or otherwise made in the vicinity of the transmitting membrane, was for the time being the prime mover or controller of the apparatus. It is not intended and it is not necessary that the tone given out by the Varley receiver shall have any distinguishable quality except pitch, because the Varley signals are indicated by the mere duration of the tone in all cases. The Bell receiver, on the contrary, reproduces tones of all pitches and reproduces sounds of all kinds, whether they are made by a musical instrument or uttered by the human voice, that is to say, the Bell receiving membrane, by reason of its capacity to copy the movements of the transmitting membrane and armature and by reason of the capacity of the transmitting membrane to be set into vibration and to copy the forms of sound waves in the air, reproduces at the receiving station utterances of the human voice at the transmitting station. The nature of the intelligence thus capable of being imparted at the receiving station by the Bell apparatus depends simply upon the nature of the human utterances at the transmitting station, because it consists in a reproduction of those utterances, instead of consisting, as in the case of the Varley apparatus, of a succession of musical tones of like pitch, indicating the letters of the Morse alphabet by their variable duration. In the Bell apparatus, there is no key for the operator to make signals with, and there is no making and breaking of a circuit for the purpose of making signals, nor for the purpose of causing electrical impulses, nor for any purpose whatever.

The difference between the methods of using the two contrivances is, that Varley's can only be used by working a Morse key, while Bell's may be used by speaking to it. The difference between their methods or modes of operation is, that Varley's key when depressed lets on to the line a regular succession of uniform electrical impulses, which cause the receiver to vibrate and to give out a musical tone of definite pitch for a longer or shorter time according to the length of time that the key is depressed. On the contrary, the Bell apparatus operates by the generation in the circuit, primarily by sound waves in the air, of electrical undulations varying in their order and strength in a manner corresponding with the rate, velocity, and

direction of the actuating sound waves. The electrical changes produced in the Varley apparatus simply consist in the presence on the line, while a signal is being made, of a vibratory or intermittent current, composed of electrical impulses of uniform strength succeeding each other at one prescribed uniform rate. On the contrary, the vibratory currents present on the line during the operation of the Bell apparatus are composed of electrical impulses varying in their strength and rate of succession in a manner corresponding with the variations in the aerial vibrations by which the apparatus is actuated. The difference in the results produced is that Varley's apparatus makes at the receiving station a succession of musical tones of like pitch, while Bell's apparatus reproduces at the receiving station utterances of the human voice and sounds of any kind.

The differences in the construction and mode of operation between the Varley apparatus and the Bell apparatus are so great that it is difficult to compare them; thus, the Varley apparatus, unlike Bell's, contains no provision for causing electrical undulations similar in form to (or in other words, varying in their rate and strength in a manner corresponding with the variations in) the vibrations of the air accompanying vocal and other sounds. And unlike the Bell apparatus, the Varley apparatus contains no mechanism capable of being actuated by all kinds of aerial vibrations, or in other words, by all kinds of sounds. Bell's receiving mechanism consists of his hinged armature, fastened at what would otherwise be its free end, to the centre of a stretched membrane immediately in front of the pole of an electro-magnet. The armature remains at rest so long as the attractive force upon it of the electro-magnet is counterbalanced by the elastic force of the membrane to which it is attached. Electrical undulations in the line either weaken the attractive force of the magnet and so permit the elastic force of the membrane to preponderate, or else increase the strength of the magnet and thus cause its attractive force to preponderate over the elastic force of the membrane. Bell's receiving mechanism gives out all kinds of sounds, because these alternate preponderances of the two forces acting upon the armature, respectively vary in degree and order of succession according to the degrees of variation in the strength of the magnet resulting from electrical undulations induced in the line by the vibra-

3399

tions of an armature at the transmitting station, which is vibrated by the impact of sound waves in the air upon the membrane with which it is connected, and which in vibrating copies the motions of the air excited by the utterance of a vocal sound, or of a sound of any kind, made in any way in the vicinity of the membrane at the transmitting station.

Int. 4. Will you make the same comparison as to the apparatus described in defendant's Exhibit Wheatstone and Cook Patent, defendant's Exhibit Edison Relay Magnet Patent, and extract from Prescott's "Electricity," pages 540, 541?

Ans. The apparatus described in the defendant's Exhibit Wheatstone and Cook Patent, and shown in the Figs. 18, 19 and 20 of the drawing, consists of a magneto-electric machine, the poles of which are connected with a telegraph line, and which by its operation, when the circuit is closed, induces a succession of electrical impulses in the line following each other according to the speed with which the magneto machine is driven, and ceasing when the rotation of the magneto machine is arrested. Signals are made by rotating the magneto-electric machine for longer or shorter periods, and thus working a dial-receiving instrument by a greater or less number of step by step movements. The impulses induced in the line by the rotation of the magneto machine are undulatory in the sense of being impulses which increase gradually to their maximum strength and then decrease gradually, but their form is regular and is that which is due to the organization of the magneto machine, and in no wise corresponds with the infinitely variable forms of vibrations of the air accompanying vocal and other sounds. In the Wheatstone and Cook apparatus, it is the intermittent quality of the current which is important, and not its undulatory quality. The apparatus is dissimilar to that of Bell as regards its method of use, the mode in which it operates, and the result which it produces.

The apparatus described in the defendant's Exhibit Edison Relay Magnet Patent is intended for the purpose of making a signal through a closed battery circuit by a definite augmentation in the resistance of the line. This is effected by means of a Morse key in a local battery circuit containing an electro-magnet, the armature of which is included in the line and is provided upon its free end with

a vertical stem, the lower portion of which is immersed in a liquid of feeble conductivity, which also forms a part of the line circuit. A retractile spring causes the elevation of the free end of the armature, and hence a shallow immersion of its stem in the liquid when the local circuit is open; but when the key is depressed, and the local circuit closed, the electro-magnet is polarized, and by its attraction pulls down the armature, thus causing a deep immersion of the stem and lessening the thickness of the stratum of liquid of feeble conductivity, and so causing a definite diminution in the resistance of the line circuit, and hence a sufficient augmentation in the strength of the current permitted to flow through the line to enable it to work a receiving instrument insensible to the weaker current flowing when the stem attached to the armature is in the condition of shallow immersion resulting from the opening of the local circuit.

Electrical undulations, like those referred to in Bell's first patent, cannot be caused by the apparatus shown in the Edison relay magnet patent, because its stem or "conducting wire" has imposed upon it a definite range of movement in either direction, and is governed in the position which it occupies by the key which opens or closes the local circuit, the depression of the key causing a certain definite diminution of the resistance of the line circuit, which continues so long as the key is held down, or until the release of the key breaks the local circuit and causes a definite increase in the resistance in the line, which continues until the key is again depressed.

The apparatus described in the Edison relay magnet patent is constructed for, and is only capable of use in the Morse system of signaling by means of a sending key, and is wholly unlike the apparatus shown in the first Bell patent, in respect of capacity to cause electrical undulations of the form prescribed in the fifth claim of the first Bell patent, because it does not contain any instrumentality capable of being actuated by sound as a prime mover. In using the word "sound" in this way, I am of course to be understood as referring to those vibratory movements of the air which excite the sensation of sound.

The apparatus described in defendant's Exhibit, Extract from

3401

Prescott's "Electricity," pages 540, 541, is a hand magneto-electric machine, having the coils of its armature included in a telegraph circuit. The armature is pivoted between the poles of a system of permanent magnets, and is provided with a handle, by means of which it may be tilted by the hand of an operator. When tilted in either direction a current is induced in its coils, which is felt on the line, and may be employed to operate, either directly or indirectly, a receiver at the distant station. The prime mover of the apparatus is the hand of the operator. The number of electrical impulses induced coincides with the number of movements of the armature which the operator makes, and the character of those impulses, as to their strengthened form, depends upon the velocity and steadiness or unsteadiness with which the movements of the armature are made by the operator. There is nothing contained in Siemen's apparatus adapting it to cause electrical undulations, similar in form to the vibrations of the air accompanying vocal and other sounds, but on the contrary, the Siemen's apparatus is, as it is frequently called, a "magneto-key" which is designed for signaling by the Morse system.

Int. 5. Will you compare the several instruments testified to by Mr. Goodridge and Mr. Gray, as having been used before the date of the first Bell patent, as transmitters, and state in what respect they correspond with or differ from the transmitting instrument represented in Figure 7 of Bell's patent, in their mode of operation, and as to their capacity to be used in the same way or for the same purpose?

Ans. It is a peculiarity of all the instruments which Messrs. Goodridge and Gray testified to as having been used as transmitters prior to the date of the first Bell patent, that they are worked by making and breaking, by means of a Morse key, a circuit of which the key when depressed forms a part; it is another peculiarity of them that the electrical changes on the line, while a signal is being made, consist of a regular succession of alternate uniform augmentations and diminutions in the strength of the current, which by their periodicity cause a receiver to give out a musical tone of definite pitch; and it is a further peculiarity that these augmentations and diminutions in the strength of the current are caused by means of a

vibrating reed acting as a circuit breaker to alternately make and break either the main circuit or a shunt circuit. All these instruments belong to the class of which the Varley apparatus is a type, and like the Varley apparatus, differ from the transmitting apparatus represented in Figure 7, of the Bell patent, in not containing any instrumentality capable of being actuated by vibrations of the air, accompanying all kinds of sounds, and in not containing any means of causing those electrical changes in the line which consist of electrical undulations, similar in form to the vibrations of the air accompanying vocal or other sounds. In other words, in all the forms of transmitting apparatus referred to in the question, there is no instrumentality capable of being actuated by sound as its prime mover, and no provision for keeping the receiver under the control of the transmitting apparatus during those intervals, while the vibrating reed of the transmitter is away from its contact point, and the circuit in which it is placed is broken. It is the purpose of all the instruments referred to in the question to cause a receiver to give out a musical tone of definite pitch for a longer or shorter time. On the contrary, it is the purpose of the transmitting instrument represented in Figure 7, of Bell's patent, to cause a receiver to reproduce any sound which has set the transmitting instrument into operation, whether such sound be made by a musical instrument, or whether it be an utterance of the human voice.

Int. 6. Will you refer to the thirteenth interrogatory to Mr. Edward S. Renwick, on page 202 of the Record, and to his answers thereto, and state in what way vocal sounds would be transmitted with a Reiss telephone by the vibrations of a stretched membrane operating to make and break the circuit, and what correspondence there would be between the sounds uttered against the membrane, and those given out by the receiving instruments, and how, if at all, the apparatus differs in construction, method of operating, and results, from that described in Bell's patent, 174,465, and referred to in the fifth claim.

Ans. The Reiss telephone is an apparatus which, by making and breaking a battery circuit, and thus causing a rapid succession of interruptions in the current, has the capacity of making a receiver give out a musical tone whenever such interruptions are periodic.

It is the only one of the defendant's exhibits which is actuated by sound, or in which, as in the lover's telegraph, sound sets a stretched membrane into vibration. The Reiss apparatus may be made to make and break the circuit at different rates, by varying the pitch of the sound employed to set its membrane into vibration. Thus the interruptions in the current may be occasionally varied in periodicity, and the tone given out by the receiver be correspondingly varied in pitch. But those changes in the forms of the aerial vibrations, which occur during the intervals while the circuit is broken, produce no effect upon the Reiss circuit, and find no expression in the sound given out by the Reiss receiver. The Reiss apparatus, therefore, is incapable of transmitting utterances of the human voice telegraphically, because its receiver is not under the constant and uninterrupted control of the aerial vibrations which actuate the vibrating membrane. For this reason Mr. E. S. Renwick's affirmative answer to the thirteenth interrogatory addressed to him is incorrect and misleading, so far as it suggests the idea that the sounds given out by the Reiss receiver are those which are uttered against the Reiss membrane. On the contrary, the sound given out by the Reiss receiver has those qualities which are inherently due to its own organization, and resembles a vocal or other sound uttered or made against the stretched membrane only in the single particular of pitch, the pitch of the receiver being that which is due to the rate or periodicity of the breaks in the circuit made by the vibrations of the membrane. The tone of a violin, by reason of its organization and the law of its operation, has qualities which distinguish it from the tone, for example, of a trumpet or from the singing tone of the human voice, although the three kinds of tones have the same pitch. There is no transmission telegraphically by the Reiss instrument, of vocal sounds uttered against its membrane, because all the infinite varieties in the forms of vibration which give quality to vocal sounds, and upon which articulate speech depends, are not afforded in the Reiss instrument an opportunity of controlling the electrical condition of the circuit, and hence of controlling and finding expression in sound given out by the receiver.

Int. 7. If you should put a drop of water upon and between the contact points of a Reiss telephone, as stated in Mr. Pope's seven-

teenth and one hundred and sixtieth cross-answers, and could persuade it to stay there and not be driven away by the operation of the instrument, would that make a telephone capable of causing in an electrical circuit electrical undulations, similar in form to the vibrations of the air accompanying vocal sounds or capable of transmitting articulate speech, and if not, why not?

Ans. The Reiss telephone, with a drop of water between its contact points, would not be capable of causing electrical undulations similar in form to the vibrations of the air accompanying vocal sounds, because the instant the contact points touched each other, there would be a sudden and extreme diminution in the resistance of the circuit, and a correspondingly sudden and extreme augmentation in the strength of the current, and at the instant of the separation of the contact points, there would be a sudden and extreme increase in the resistance of the circuit, and a corresponding decrement in the strength of the current. These sudden and extreme changes would necessarily have the effect of distorting the electrical undulations in the current, caused in part by the variable quantity of water between the contact points, so that undulations so caused would not be similar in form to the sonorous aerial vibrations, but would be distorted in form. It is my opinion, that for this reason the Reiss telephone, in the case suggested, would not transmit articulate speech.

Int. 8. In what position must a mass be held or suspended in order that it shall be a pendulum, and shall oscillate under the laws which govern the periods of the oscillations of pendulums, and in what position does Bell's first patent direct the instruments shown in Figure 7 to be held?

Ans. A mass which is to act as a pendulum should be so suspended that it will hang in a vertical position when at rest. Bell's first patent contains no direction as to the position the instruments shown in Figure 7 are to be held. The mode of representation adopted in Figure 7 is the conventional one, the position of the various parts being those in which they can be most conveniently and clearly shown. The armatures of the transmitting and receiving instruments are neither of them represented as hanging vertically.

Int. 9. Mr. d'Infreville has testified as to certain experiments

3405

in which you took part with complainants' Exhibits 51 and 52. Are those exhibits constructed in accordance with Figure 7, and that part of the specification relating to Figure 7 in the first Bell patent, and will you give an account of those experiments, and state in what position you held the instruments in question while you were trying them?

Ans. I have read Mr. d'Infreville's testimony, and his statement is correct. I have been for some time past gradually recovering from an injury which has affected my hearing, and during the more recent trial, to which Mr. d'Infreville referred, I was able to hear distinctly with the receiving instrument (complainants' Exhibit 52). I also tried the transmitting instrument (complainants' Exhibit 51), and successfully carried on a conversation with Mr. d'Infreville, and also heard him repeat through another line sentences which I had first spoken to him through the transmitter. In these experiments I varied the positions of the transmitter and of the receiver respectively, by turning them round without perceiving any difference in the effectiveness of their operation. Both these exhibits (complainants' Exhibits 51 and 52) are made in accordance with Figure 7 and with the description of Figure 7 contained in Bell's first patent.

Int. 10. What difference, if any, do you find between the apparatus described in the Gray patent, No. 166,095, and especially the receiving instrument as shown in that patent, and the apparatus described in the second Bell patent, so far as the electrical and magnetic conditions are concerned?

Ans. The Gray receiver of the patent 166,095 is a metallic box with holes in the top of it, resting upon the ends of two iron cores surrounded by coils which are included in the secondary circuit of an induction coil. Currents of electricity induced in the secondary circuit temporarily polarize the iron cores, effecting by their alternation in direction a constant series of reversals in the polarity of the cores. The box, if made, for example, of iron, is an armature or keeper, which, by resting upon the cores, completes a magnetic circuit, thus, as I understand, rendering the cores sluggish in yielding to variations in the current tending to alter their magnetization. The iron cores are not permanently magnetized, and therein lies a substantial and material difference between the Gray receiver and

3406

the receiving apparatus described in the second Bell patent, which is also to be used as a transmitter. Considered as mere aggregations of metallic objects, that is to say, as iron plates and iron cores with coils of wire around them, the two things resemble each other, but in Bell's apparatus the cores are permanently polarized, either by a constant battery current or by a permanent magnet, and this permanent polarity of the apparatus is a condition which is absent from Gray's apparatus, and is absolutely indispensable to fit Bell's apparatus for use as a transmitter, and greatly improves it for use as a receiver. The box, as shown in Gray's patent, cannot be used as a transmitter because there is no permanent polarity in that portion of the apparatus of which it forms a part, and its vibrations, therefore, will produce no electrical effect in the circuit which is included in the coils around the iron cores upon which the box rests. The contact of Gray's box with the cores upon which it rests must obviously impair the freedom of its movements in vibrating, and of course lessen its efficiency as a receiver.

BOSTON, Sept. 19, 1879.

Cross Examination by CAUSTEN BROWNE, Esq., *of Counsel for Defendant.*

Cross-Int. 11. You say that for some years past, you have had to take particular note of apparatus for transforming mechanical energy into electrical energy in connection with drawing the specifications and prosecuting the applications for patents for inventions in dynamo-electric machines, and in connection with litigation under such patents. These dynamo-electric machines are large magneto machines for converting mechanical power into electricity for electro-plating, and electric lighting, and telegraphic purposes, are they not?

Ans. Yes.

Cross-Int. 12. Are they the inventions of a Mr. Weston? I mean the inventions for which the patents you speak of were obtained.

Ans. Most of them were inventions of Edward Weston of Newark, N. J.

Cross-Int. 13. In comparing the apparatus described in the

3405

in which you took part with complainants' Exhibits 51 and 52. Are those exhibits constructed in accordance with Figure 7, and that part of the specification relating to Figure 7 in the first Bell patent, and will you give an account of those experiments, and state in what position you held the instruments in question while you were trying them?

Ans. I have read Mr. d'Infreville's testimony, and his statement is correct. I have been for some time past gradually recovering from an injury which has affected my hearing, and during the more recent trial, to which Mr. d'Infreville referred, I was able to hear distinctly with the receiving instrument (complainants' Exhibit 52). I also tried the transmitting instrument (complainants' Exhibit 51), and successfully carried on a conversation with Mr. d'Infreville, and also heard him repeat through another line sentences which I had first spoken to him through the transmitter. In these experiments I varied the positions of the transmitter and of the receiver respectively, by turning them round without perceiving any difference in the effectiveness of their operation. Both these exhibits (complainants' Exhibits 51 and 52) are made in accordance with Figure 7 and with the description of Figure 7 contained in Bell's first patent.

Int. 10. What difference, if any, do you find between the apparatus described in the Gray patent, No. 166,095, and especially the receiving instrument as shown in that patent, and the apparatus described in the second Bell patent, so far as the electrical and magnetic conditions are concerned?

Ans. The Gray receiver of the patent 166,095 is a metallic box with holes in the top of it, resting upon the ends of two iron cores surrounded by coils which are included in the secondary circuit of an induction coil. Currents of electricity induced in the secondary circuit temporarily polarize the iron cores, effecting by their alternation in direction a constant series of reversals in the polarity of the cores. The box, if made, for example, of iron, is an armature or keeper, which, by resting upon the cores, completes a magnetic circuit, thus, as I understand, rendering the cores sluggish in yielding to variations in the current tending to alter their magnetization. The iron cores are not permanently magnetized, and therein lies a substantial and material difference between the Gray receiver and

3406

the receiving apparatus described in the second Bell patent, which is also to be used as a transmitter. Considered as mere aggregations of metallic objects, that is to say, as iron plates and iron cores with coils of wire around them, the two things resemble each other, but in Bell's apparatus the cores are permanently polarized, either by a constant battery current or by a permanent magnet, and this permanent polarity of the apparatus is a condition which is absent from Gray's apparatus, and is absolutely indispensable to fit Bell's apparatus for use as a transmitter, and greatly improves it for use as a receiver. The box, as shown in Gray's patent, cannot be used as a transmitter because there is no permanent polarity in that portion of the apparatus of which it forms a part, and its vibrations, therefore, will produce no electrical effect in the circuit which is included in the coils around the iron cores upon which the box rests. The contact of Gray's box with the cores upon which it rests must obviously impair the freedom of its movements in vibrating, and of course lessen its efficiency as a receiver.

BOSTON, Sept. 19, 1879.

Cross Examination by CAUSTEN BROWNE, Esq., *of Counsel for Defendant.*

Cross-Int. 11. You say that for some years past, you have had to take particular note of apparatus for transforming mechanical energy into electrical energy in connection with drawing the specifications and prosecuting the applications for patents for inventions in dynamo-electric machines, and in connection with litigation under such patents. These dynamo-electric machines are large magneto machines for converting mechanical power into electricity for electro-plating, and electric lighting, and telegraphic purposes, are they not?

Ans. Yes.

Cross-Int. 12. Are they the inventions of a Mr. Weston? I mean the inventions for which the patents you speak of were obtained.

Ans. Most of them were inventions of Edward Weston of Newark, N. J.

Cross-Int. 13. In comparing the apparatus described in the

3407

Edison relay magnet patent with the Bell patent of 1876, you speak of the "electrical undulations of the form prescribed in the fifth claim of the first Bell patent." Please state what you understand to be the form of the electrical undulations prescribed in that claim.

Ans. The fifth claim prescribes that the electrical undulations shall be similar in form to the vibrations of the air accompanying vocal or other sounds. I understand that sonorous aerial vibrations, and especially those excited by the human voice, are infinitely variable in form, and that that claim prescribes that the electrical undulations shall copy, as it were, all the variations in form, whatever they may be, which accompany the vocal or other sounds by which the apparatus is actuated.

Cross-Int. 14. Are you sufficiently acquainted with the science of telegraphic transmission of sound to be able to say whether or not, in the case of an inductive diaphragm vibrated within the magnetic field of the core by the impact of the aerial waves upon the diaphragm, the electrical undulations thrown upon the line wire exactly correspond with the form of the aerial waves or vibrations or only do so approximately?

Ans. I am sufficiently acquainted with the subject to be able to say that there is a close approximation in the forms of the aerial waves and electrical vibrations, amounting to such a correspondence between them as to cause the diaphragm in the field of the magnet at the receiving station to set up vibrations similar in form to those of the inductive diaphragm at the transmitting station.

Cross-Int. 15. What is it that prevents the forms of electrical undulations in the line wire from being an exact copy of, and limits them to being a close approximation to, the forms of the aerial vibrations which fall upon the transmitting diaphragm? In other words, why does not each and every vibratory movement of the inductive diaphragm produce in the transmitting core a rise and fall of magnetism, corresponding precisely in extent and in periodicity and in rate of rise and fall with the vibratory movement of the diaphragm, and the movement of the air wave which moves the diaphragm?

Ans. I know of nothing which prevents the forms of electrical

undulations in the line wire from being exact copies of the forms of the aerial vibrations in question.

Cross-Int. 16. Do you know whether or not shortening the coil of the magnet at the transmitting station promotes *distinctness* of the articulate sound heard at the receiving station?

Ans. This question relates to another branch of the subject. In answering the preceding questions, I have assumed that no account was meant to be taken of the construction of the magnet. I understand that shortening the length of the coil of the magnet at the transmitting end makes the magnet more sensitive in responding to electrical changes in the circuit, and also makes the electro-magnet more sensitive to inductive action, and that this change improves the distinctness of the articulate sound heard at the receiving station.

Cross-Int. 17. Do you mean by greater sensitiveness to inductive action that the core of the magnet responds more promptly, by the rise and fall of its magnetism, to the inductive influence of the diaphragm as it approaches and recedes from the core in its vibration?

Ans. That is my impression, derived from information, not from actual experiment of my own.

Cross-Int. 18. And why is it that this greater promptness of response in the magnetic condition of the core to the inductive action of the vibrating diaphragm improves the distinctness of the articulate words heard at the receiving station? Is it because each rise and fall of magnetism in the core for each vibration of the diaphragm is completed (or more nearly completed) before the next vibration, so that electrical conditions in the wire, which should be successive for distinct articulation, may not, so to speak overlap and be confused together, and produce indistinct articulation?

Ans. I understand that this greater promptness of response is due to the cause stated.

Cross-Int 19. Then I suppose that the exactness with which the form of the air wave for any given instant of time is reproduced by the electrical undulation upon the line wire will depend upon the degree in which the change of magnetic condition of the core answering to that form of air wave is completely accomplished before

3409

the next aerial vibration and vibration of the diaphragm and consequent change in the magnetic condition of the core begins.

Ans. I understand the situation to be this: The forms of the successive vibrations are, in the case of a slow magnet, copied by the electrical undulations, but with what is called in the question an overlapping, which as I understand diminishes the range of variation in the rise and fall of the current, and hence diminishes the amplitude of the vibrations of the receiving diaphragm. And that in the case of the quick magnet, the range of difference in the rise and fall of the current is greater, and the action of such undulations upon the receiving diaphragm more energetic.

Cross-Int. 20. Do you understand by a quick or sensitive magnet one which is charged and discharged quickly?

Ans. Yes, sir.

Cross-Int. 21. Is this quickness of charge and discharge obtained at the sacrifice of power in the magnet?

Ans. I am informed that such is the case, but am not experimentally familiar with the fact.

Cross-Int. 22. If it is true that quickness in the magnet is gained at the expense of power, do you think that the quicker magnet will give a greater amplitude or range of difference in the rise and fall of the current, as stated in your nineteenth answer? Is not the gain in amplitude a result of the power of the magnet, not of its quickness or sensitiveness?

Ans. The extent to which amplitude or range of difference in the rise and fall of the current will be affected in the case supposed will depend of course upon the extent of the loss of power in the magnet, and as compared with the slow magnet, I understand that there is not such a loss of power in the case of the quick magnet, about which we are speaking, as will cause a diminution in the amplitude or range of difference in the rise and fall of the current equal to that resulting from what we have called the overlapping of the impulses.

Cross-Int. 23. Will you please now refer to the drawings of the 1876 Bell patent, Figures 5 and 6? If one of the transmitting armatures in those drawings be vibrated so as to emit its musical note, do vibrations of the air accompany that sound?

Ans. If the transmitting armature be surrounded by air, the air will, of course, be set in vibration as stated in the question.

Cross-Int. 24. And while the sound continues, the vibrations of the air which accompany it of course continue, do they?

Ans. Yes.

Cross-Int. 25. Have these vibrations of the air "form"?

Ans. Certainly.

Cross-Int. 26. By the supposed vibration of the armature emitting its musical tone are there produced upon the line wire electrical undulations or vibrations, similar in form to the vibrations of the air accompanying the said tone?

Ans. The tone has nothing to do with the production of the electrical undulations on the line. It is an incident of the operation of the apparatus when surrounded by air that the vibrations of the armature cause vibrations in the surrounding air, which excite the sensation of a sound the pitch of which is determined by the normal rate of vibration of the armature, and it is a further incident of the operation of the apparatus, whether it be surrounded by air or not, that the vibrations of the armature cause electrical undulations or vibrations in the line, similar in form to the vibrations of the armature, that is, similar in form to those vibrations of the air accompanying a sound having the definite pitch of which I have spoken.

Cross-Int. 27. Do these electrical undulations upon the line wire cause a tone to be heard from the corresponding receiving armature, which tone answers to the same rate of vibration of the air to which the tone of the transmitting armature answers?

Ans. Yes, sir.

Cross-Int. 28. For the purpose of performing the operation we are now speaking of, does it make any matter by what means the transmitting armature is set in vibration at its normal rate?

Ans. No, sir.

Cross-Int. 29. Referring now to the apparatus testified to as having been used by Mr. Gray or under his direction in 1874, illustrated in the Gray patent 166,095, and assuming such apparatus to be used with the receiving diaphragm marked S held at a slight distance from the cores of the electro-magnet instead of resting upon them, will you say whether, when one of the armatures in the trans-

3411

mitting apparatus is vibrated in air so as to emit its musical tone, vibrations of the air accompany that musical tone?

Ans. Such vibrations, of course, do accompany the tone in question.

Cross-Int. 30. And these vibrations of the air have "form," I suppose?

Ans. Certainly.

Cross-Int. 31. And by the supposed vibration of the armature emitting its musical tone, are there produced upon the line wire electrical undulations or vibrations, similar in form to the vibrations of the air accompaying said line?

Ans. In this case, as stated in my answer to the twenty-sixth cross-question, the existence of air vibrations at the transmitting station is of no consequence whatever. It is an incident of the vibrations of the transmitting armature that there are produced upon the line wire electrical undulations, similar in form to those vibrations which the armature causes in the air around it.

Cross-Int. 32. Do these electrical undulations upon the line wire cause a tone to be heard from the receiving diaphragm S S (which you will remember I have assumed to be held slightly away from the poles of the receiving magnet), which tone answers to the same rate of vibration of the air to which the tone of the transmitting armature answers?

Ans. Yes, sir.

Direct Examination resumed.

Int. 33. Do you mean by your answer to the thirty-first cross-interrogatory to be understood that the electrical undulations or vibrations produced upon the line wire by the vibration of the armature in the Gray apparatus are similar in form to the vibrations of the air accompaying the vibration of said armature in the same sense that you have stated them to be similar in form as respects the operation of the armature shown in Fig. 5, of the Bell patent of 1876?

Ans. Certainly not. The armature in the Gray apparatus is a contact breaker suddenly arrested in its path of movement by collision with its contact point, and producing in its movements definite

changes in the strength of the current, which, by their periodicity, cause the receiver to set up vibrations by which a sound of definite pitch is heard. In the Bell apparatus referred to, the armature is free to vibrate in accordance with its natural law of operation, or in other words, is free to vibrate unobstructedly, and it therefore produces electrical undulations, which gradually increase in strength to their maximum, and then gradually diminish in strength. Thus, while the electrical impulses in the Gray apparatus coincide in their order with the movements of the Gray armature, they do not correspond to vibrations of the air accompanying the musical tone spoken of, because they are suddenly cut off, as it were, by the interruptions of the current. In all the forms of apparatus of which that shown in the Gray patent, 166,095, is a type, the individual forms of the vibrations of the armature at the transmitting station, and the individual forms of the electrical vibrations in the circuit are of no consequence, their number or the rate at which they follow each other being alone relied upon to give character to the signals which they transmit; and none of them, therefore, are capable of transmitting articulate speech telegraphically, because they are none of them capable of causing electrical undulations in the circuit which, individually considered, are similar to the forms of air vibrations accompanying articulate speech. This capability is possessed by the apparatus shown in Fig. 7, of the first Bell patent, which, being actuated by articulate speech, sets up the forms of vibrations of the air accompanying speech, and causes the corresponding electrical undulations in the circuit, by means of which such speech is reproduced at the receiving station.

Int. 34. In what respect do the electrical impulses produced in the Gray apparatus correspond with the movements of the Gray armature producing those impulses?

Ans. In respect of their periodicity; the Gray armature, by opening and closing the circuit, causes a succession of interruptions in a battery current.

Int. 35. And in what respect, then, do these electrical impulses correspond with the vibrations of the air accompanying the tone emitted by the vibrating armature?

Ans. In respect of periodicity merely; during some part of each

3413

vibration of the air, there is an electrical impulse caused by the temporary closing of the battery circuit. There is no continuity in the correspondence spoken of in the question, because there is a succession of breaks in the circuit. In giving my answer to the thirty-first cross-question, I had in my mind the Bell armature, which operates by inducing currents in the circuit, and did not draw the distinction which I have now drawn between the Bell armature and the Gray armature, which operates by making and breaking the circuit.

EDW. E. QUIMBY.

Attest: W. P. PREBLE, Jr., *Examiner*.

DEPOSITION OF HENRY B. RENWICK.

Complainants' counsel puts in evidence two pairs of membrane telephones, marked respectively "Complainants' Exhibits 54 and 55, H. B. Renwick Membrane Telephone Light Armature Transmitter and Receiver, W. P. Preble, Jr., Examiner," and "Complainants' Exhibits 56 and 57, H. B. Renwick Membrane Telephone Heavy Armature Transmitter and Receiver, W. P. Preble, Jr., Examiner."

Direct Interrogatories propounded by J. J. STORROW, Esq., *for Complainants.*

Int. 1. Look at the membrane telephones marked "Complainants' Exhibits 54," H. B. Renwick membrane telephone light armature transmitter, and "55," receiver, also "56," heavy armature transmitter, and "57," receiver, and state whether you have ever tried to transmit articulate speech with them; and if so, when, where and with what results.

Ans. I have tried to transmit articulate speech with the membrane telephones referred to in the question at two different times: first, at the office of Mr. Chauncey Smith in Pemberton Square, Boston, on or about Jan. 23, 1879; and second, at the office of Mr. Storrow, No. 40 State Street, Boston. At Mr. Smith's the receiver was in his office and the transmitter in an L or rearward projection of the building, the wire crossing diagonally to the L from the main building. Mr. Smith's office was in the second story and the

room containing the transmitter in the basement. Articulate speech was heard when using either the pair 54, 55 or the pair 56, 57; questions and answers were transmitted, the questions being sent through the membrane telephone or sometimes through an ordinary pair of telephones, and the answer sent through the pair (either ordinary or the membrane telephones), which were not used in sending the question. I saw also a conversation or conversations held by means of the membrane telephones alone, using sometimes one pair, sometimes the other pair of membrane telephones, and knew they were conversations by hearing the questions as spoken and having the answers repeated to me; in these cases where conversations were held with the exhibits alone, the transmitter was used both as transmitter and receiver, and the receiver not only as a receiver but also as a transmitter. I was sometimes in the room with the receiver, sometimes in that with the transmitter, and when in the room with the receiver, held it to my own ear and heard what was spoken into the transmitter at the other end of the line. Sometimes I heard and made out the whole sentence the first time it was sent; at other times I missed some word or words, and it was necessary to repeat sometimes once, sometimes oftener, before I was certain that I heard every word. Songs were sung into the transmitter and I heard them perfectly in the receiver, both notes and words, that is, as many of the words as usually distinguishable by the hearer of a song. Mr. Watson did most of the talking into the receivers. I do not remember that there was any difference in degree of distinctness and certainty between the two pairs of telephones, heavy or light armature, but my remembrance is that we used the light armature pair most. The same line wire and battery was used with both pairs; when one pair was in use the other pair was disconnected. The utterances heard through these membrane telephones were not as perfect or so loud as in those telephones now in common use, but even in those now in use I often find it necessary to have a question or answer repeated to me before I understand it entirely. The utterances through these membrane telephones was, however, better than through some telephones with metallic diaphragms tried by me about two years ago.

After talking for some time through these membrane telephones, the utterance became indistinct, owing, so far as I could ascertain, to

the slackening of the diaphragms of the transmitters by the condensation thereon of the moisture of the breath; when the diaphragm was dried the sounds were again heard as distinctly as before.

All the above refers to the trials at Mr. Smith's office.

The trials at Mr. Storrow's office were on the 6th of June, 1879. In these trials the receiver was in Mr. Storrow's office, in the part of the building fronting on State Street, and the transmitter in the attic of a part of the same building parallel to State Street, but in the rear, with a court-yard between Mr. Storrow's office and the attic where the transmitters were located.

The results, so far as I can recollect, were the same as at Mr. Smith's office in January.

Int. 2. Are the telephones 54 and 55 and the telephones 56 and 57 made in conformity with the Bell patent, 174,465 of March 7, 1876?

Ans. I believe them to be made in conformity with the patent; exact conformity. The sole difference between the two pairs is that one pair is provided with ordinary armatures, the other pair with steel-spring armatures. The Bell patent, when describing the instruments to be used in telegraphing (not speaking telephones), employs these words, "A steel spring armature *c* is firmly clamped, etc.," and when describing the transmitter and receiver Fig. 7, employs these words, "The armature *c*, Fig. 7, is fastened loosely by one extremity, etc." Now the words "the armature" may be held to apply either to an armature such as is usually employed in telegraphic instruments in connection with electro-magnets, or to apply to a steel-spring armature, provided in both cases the armature is connected (loosely hinged, as the drawings of the patent show) to the uncovered leg of the electro-magnet.

Either construction is in my opinion in substantial accordance with the directions of the patent, and the variation between the two is a formal one.

Int. 3. Under whose directions were the membrane telephone transmitters and receivers, Exhibits 54, 55, 56 and 57, made? If under your own, how particularly did your directions determine the size and construction of their parts? What led you to adopt the size and particular shape of the parts?

Ans. The transmitters and receivers referred to in the question

were made under my direction. I directed particularly as to the shape and relative proportions of the parts; said that in these respects they were to be a Chinese copy of the drawings, as far as they exhibited proportions.

The armatures in the exhibits are wider than the cores of the magnets; they were so made because that is the usual and ordinary construction. The drawings do not represent the width of the armatures. The spring armature was directed to be made out of a piece of ordinary clock spring. The cones were directed to be made of apple wood, not because I supposed there was any particular virtue in that wood, but because it is commonly used in cheap and experimental work by turners. I directed the magnets and wrapping thereof to be as usual in telegraphic instruments, and that the membranes should be of skin, like that used in tamborines, drums, or banjos, or of stout bladder like that used by snuff makers; the diaphragms to be put on wet, stretched by hand and secured by a string or wire into a groove on the ends of the cones, in the same manner that I had applied them to the mouth of bottles and jars when a boy. I gathered from the drawings that the instruments were hand instruments, small enough to be conveniently held in the hand, and said there were to be no stands or supports. My recollections concerning directions as to size are uncertain, although I am certain that I gave directions. I have been very ill since giving those directions, and am unable to remember exactly what I said in directing the size of the instruments.

I do remember having made up my mind that no precise size was of importance, or in other words, the instruments might be larger or smaller and still produce the same effects; and further remember that I said make some part (I can't remember the particular part) so large or of such diameter or so long, and from that make a scale, and from such scale make all parts in strict accordance with the shape and relative proportions shown in the drawings

I will add, at the request of complainants' counsel, that I expected to give my deposition as expert in this cause as part of the complainants' evidence in reply, but my health has not permitted me to attend to the case for several months past.

HENRY B. RENWICK.

Attest: W. P. PREBLE, Jr., *Examiner.*